Oct. 5, 1971 D. C. HOPPER 3,610,021

UNIVERSAL DIE SET WITH QUICK CHANGE DIE PLATES

Filed March 7, 1969 2 Sheets-Sheet 1

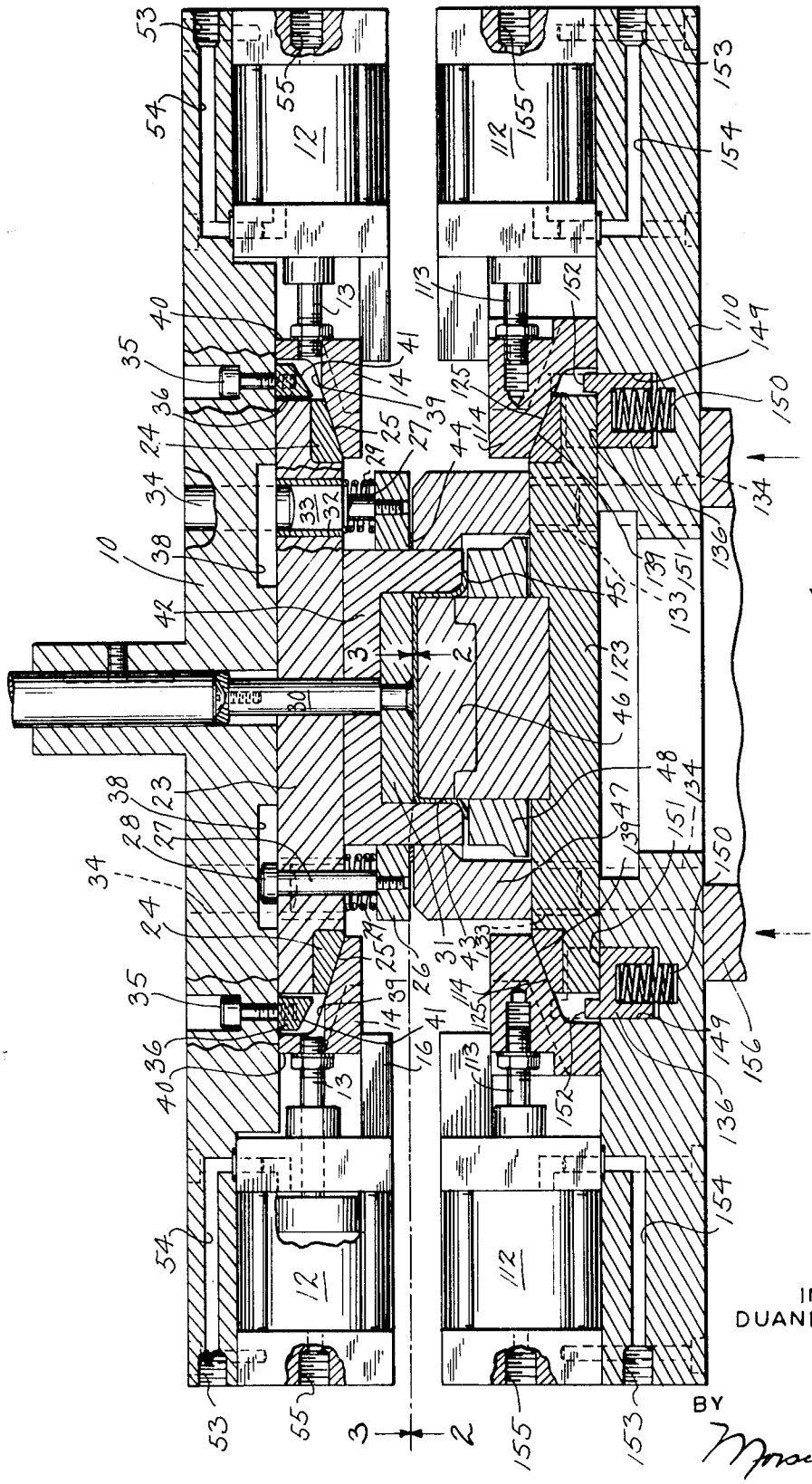

Fig. 1

INVENTOR
DUANE C. HOPPER

BY

Mosell & Mosell

ATTORNEYS

Oct. 5, 1971 D. C. HOPPER 3,610,021

UNIVERSAL DIE SET WITH QUICK CHANGE DIE PLATES

Filed March 7, 1969 2 Sheets-Sheet 2

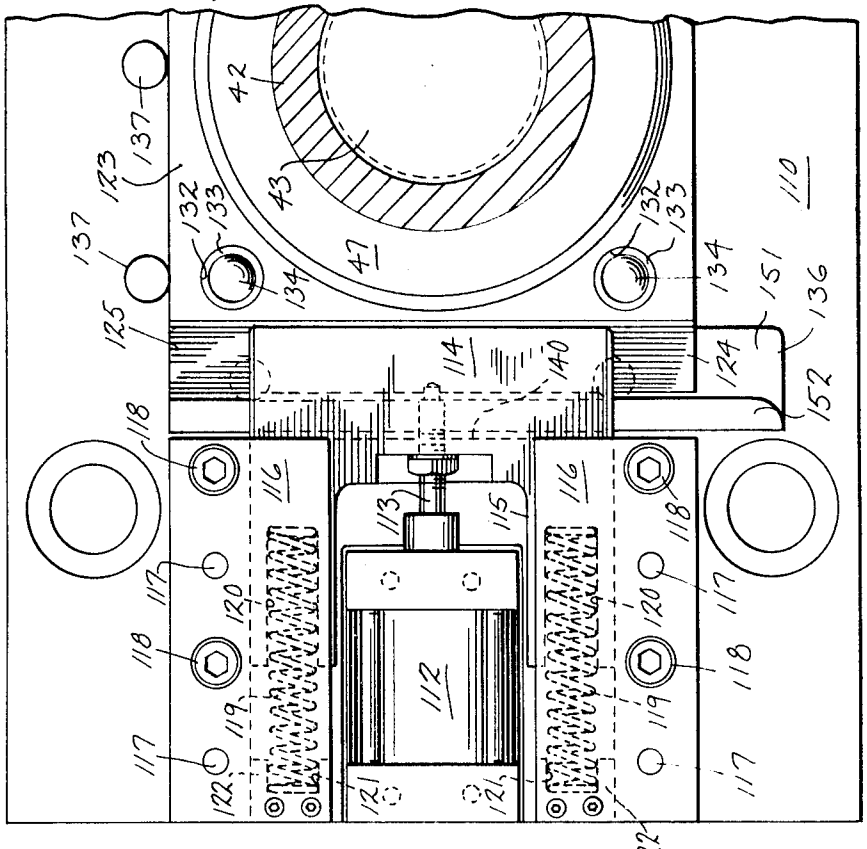

Fig. 3

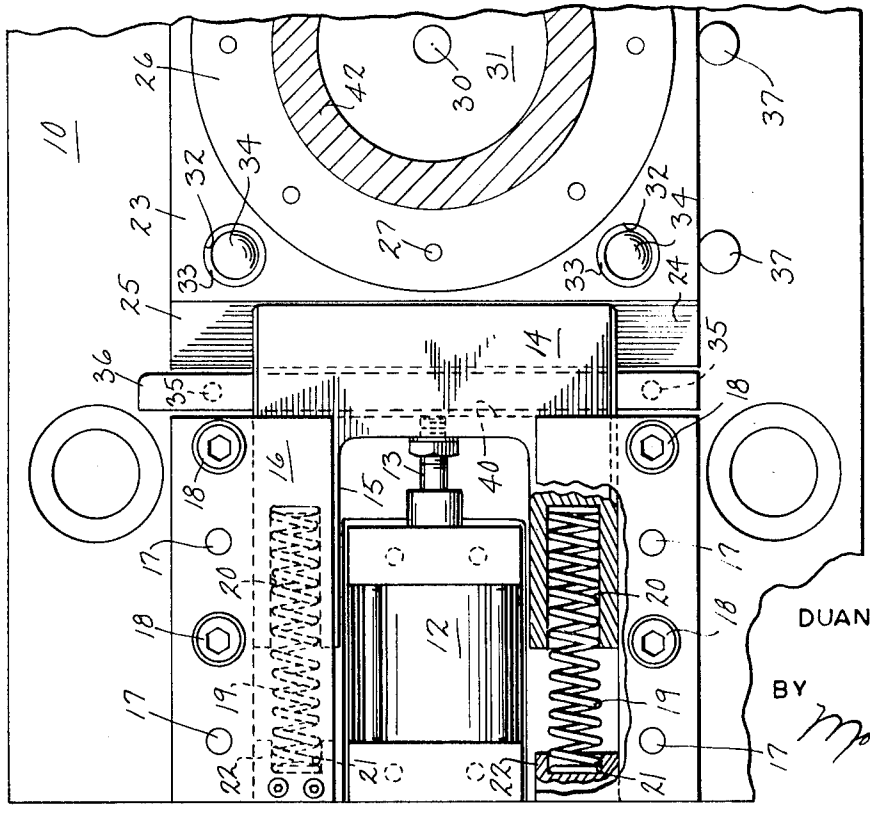

Fig. 2

INVENTOR
DUANE C. HOPPER

BY Mosell & Mosell

ATTORNEYS

United States Patent Office 3,610,021 Patented Oct. 5, 1971

3,610,021

UNIVERSAL DIE SET WITH QUICK CHANGE DIE PLATES

Duane C. Hopper, Lake Geneva, Wis., assignor to Albert Trostel Packings Ltd., Lake Geneva, Wis.

Filed Mar. 7, 1969, Ser. No. 805,266
Int. Cl. B21j 13/02
U.S. Cl. 72—446 8 Claims

ABSTRACT OF THE DISCLOSURE

A press has an upper shoe and a lower shoe and there are oppositely-disposed air cylinders on each shoe which operate straight line clamps to move the latter horizontally toward and away from each other, each clamp having a tapered surface for coaction with similarly tapered surfaces on opposite sides of the die plate to move the latter vertically into operative position on its shoe and to hold it tightly clamped in said position, the plates being supported for sliding movement into and out of the shoe when the clamps are in non-clamping position.

BACKGROUND OF THE INVENTION

Filed of the invention

The present invention is particularly useful in the mounting and replacing of die plates in the shoes of a punch press. The invention is, however, suitable for use in clamping various tool-carrying plates or workpieces in position in various types of forming machinery.

Description of the prior art

Heretofore the setting up of the dies in a press has been a time-consuming operation because of the weight and clumsiness of the parts which must be handled, and because of the time necessary in manipulating the various setup blocks, clamps, T-bolts, and slide nuts which is usually involved. These prior setup procedures customarily take an hour or more. There is a device on the market wherein there are vertically movable clamps which, when operated, push the die plates into and out of operative position. These vertically movable clamps must be operated by other devices which move at right angles to the clamps and there has to be means for translating the horizontal motion into vertical motion. This prior attempt to simplify the setup procedure is relaively complicated and expensive to manufacture.

SUMMARY OF THE INVENTION

The present invention provides, in a machine having upper and lower shoes, oppositely-disposed air cylinders for each shoe which operate straight line clamps to move the latter horizontally, there being guides for slidably receiving the die plates and for temporarily supporting the same, and each plate having oppositely-disposed tapered surfaces which are engaged by similarly tapered surfaces on the clamps so that the temporarily-supported die plate is moved vertically into operative position by the horizontally movable clamps, the clamps being directly carried by plungers of said cylinders and operated directly to move the die plates without the use of intervening mechanisms.

A general object of the invention is to provide a universal die set wherein the die plates may be quickly changed and replaced in a matter of minutes.

A further object of the invention is to provide a universal die set having novel clamping members and having other means for accurately guiding the plates into proper operative position while the clamps are being operated.

A further object of the invention is to provide mechanism for positively clamping the two die members in position.

A further object of the invention is to provide spring means for maintaining the clamps in die-holding position to insure maintenance of said position in case of failure of the compressed air delivery to the pneumatic cylinders.

With the above and other objects in view, the invention consists of the improved universal die set, and all of its parts and combinations, as set forth in the claims, and all equivalents thereof.

BRIEF DESCRIPTION OF THE DRAWINGS

In the accompanying drawings illustrating one complete embodiment of one adaption of the invention in which the same reference numerals designate the same parts in all of the views:

FIG. 1 is a transverse vertical section through a punch press, the air cylinder cushions being indicated diagrammatically;

FIG. 2 is a view taken approximately on the line 2—2 of FIG. 1 looking upwardly at the bottom of the top shoe assembly, parts being broken away and shown in section, the view showing only one side of the assembly, the other side being identical except that it is reversed in position; and

FIG. 3 is a view taken approximately on the line 3—3 of FIG. 1 looking downwardly on the top of the bottom shoe assembly, the view showing only one side of the assembly, the other side being identical except that it is reversed in position.

DESCRIPTION OF THE PREFERRED EMBODIMENT

For purposes of illustration the device has been shown as it is used in a punch press which is suitable for blanking and piercing large washers, or for the deep drawing of cases up to eight inches in diameter. It is to be understood, however, that the invention is suitable for use in many other forming machines in holding plate-supported tools or workpieces in operative position in a manner permitting quick replacement.

The numeral **10** designates an upper shoe, the latter being supported for up and down reciprocal movement under the influence of an hydraulic actuator or by other means. Suitably connected to opposite sides of the shoe are fluid pressure operated devices such as air cylinders **12** which are identical in structure but which face toward one another. Each air cylinder has the usual piston therein from which a plunger **13**, which is connected to a slidable clamp **14**, projects. Each clamp is U-shaped in plan view as shown in FIG. 2, having legs **15** which are slidable on guides **16**. Each guide **16** is secured by dowels and bolts **17** and **18** to the shoe. Springs **19** have one end received in recesses **20** of the legs **16** of the clamping members **14**. The other ends of the springs are accommodated in pockets **21** in end blocks **22**. The springs normally urge the clamping members to an extended position.

A replaceable tool or work-holding plate **23**, which, in the case of the punch press illustrated, is a die-holding plate, has opposite surfaces of its underside equipped with wear plates **24** having tapers **25**. In the case of a plate in a punch press it may be equipped with the usual stripper ring **26** which is mounted on the lower ends of slidable studs **27** having top heads **28** which limit downward movement of the stripper ring. Springs **29** surrounding the studs **26** between the ring and the lower face of the plate **23** normally urge the stripper ring in a downward direction. The plate is also equipped with a central slidable pin **30** carrying a knockout member **31** on its lower end, as is customary in punch press plates. The plate **23** is also provided with a plurality of equally

spaced locating holes **32** which are lined with bushings **33** and which are adapted to receive the lower ends of locating pins **34** which project from the underside of the shoe **10**.

Secured to the underside of the shoe **10** by bolts **35** are spaced guide bars **36**. These guide bars are spaced apart just the proper distance to slidably receive the plate **23**, the back of the plate, when it is fully inserted, engaging stop rods **37** (see FIG. 2). During slidable insertion of the plate **23** the heads of the bolts **28** are received in grooves **38**.

The upper sides of the clamping members **14** are shaped as at **39** to receive the guide bars **36** between the back wall portion **40** of each clamping member and the side edge of the plate **23**. In addition, the lower face of each guide bar is tapered as at **41** to avoid interference with the clamping member. The plate **23** may carry any suitable forming tool. In the illustration it is a blank drawing ring **42** which is adapted to stamp out and form a cup **43** from a flat sheet of metal, leaving scrap rings **44** and **45**. The metal is formed and cupped with the aid of a die **46** and a blanking ring **47** which are suitably supported on the top of a bottom die plate **123**, there being the usual ring-shaped floating pressure pad **48** between the die member **46** and the blanking ring **47**.

The bottom shoe assembly is very similar to the top shoe assembly except that the plate **123** and associated parts are positioned on the top instead of underneath, and all of the corresponding parts are designated by the same numerals as are used in the top shoe assembly except that they are preceded by the digit "1." These corresponding parts will not be redescribed.

The clamping members **114** for the bottom shoe assembly, of course, have their tapered surfaces **139** facing downwardly, and the bottom clamps are somewhat heavier in thickness. In addition, the guide bars **136** on the bottom, which correspond to the guide bars **36** on the top, are resiliently mounted in recesses **149** on springs **150** so that when the plate **123** is in the clamped, full line position of FIG. 1 the upper surfaces **151** of the guide bars **136** are flush with the upper surface of the shoe. Also, each guide bar has an outer rail **152** which projects above the surface of the shoe **110** when the plate **123** is in clamped position. When the clamping members **114** are in withdrawn position, as indicated by dotted lines in FIG. 1, then the springs urge the guiding bars **136** to the dotted line, elevated position, in which position they slidably receive the plate **123**.

Operation and use

In use of the above mechanism, with the shoe assemblies separated, the clamping members are retracted by admitting compressed air from a suitable source into the inlets **53** and **153**. This air flows through ducts **54** and **154** into the ends of the cylinders which face the work to act on the usual pistons in the cylinders **12** to retract the plungers **13** and **113** and cause the clamping members **14** and **114** to be retracted. When in the retracted position shown by dotted lines in FIG. 1, the die plates **23** and **123** may be readily withdrawn for replacement. The upper die plate **23** will have its tapered surface sliding on projecting portions of the tapered faces **39** of the clamping members, which faces are still partially overlapped when withdrawn. Due to the retracted position of these tapered faces **39** the plate has dropped away from the undersurface of the upper shoe **10** a sufficient distance to move the upper ends of the locating holes **33** below the lower ends of the locating pins **34**. The plate **23** can then be readily slid out for replacement.

When the clamping members **114** on the bottom assembly are in retracted condition, the springs **150** cause the guide bars **136** to push the lower die plate **123** upwardly a sufficient distance to free the locating holes **133** from the upper ends of the locating pins **134**. The lower die plate with attachments may then be readily slid out.

The new die members are slid into position by a reverse procedure, and the compressed air is then directed into the other inlet ports **55** and **155** to act on the piston within the cylinders **12** and **112** to cause the clamping members **14** and **114** to be extended. In the case of the upper die plate **23**, before extension of the clamping members **14**, the plate is supported between the two guide bars **36** and on the overlapped portions of the tapered surfaces **39** of the retracted clamping members **14**. With the plate pushed all the way in into engagement with the back pins **37**, the locating holes **33** will be directly below the lower ends of the locating pins **34**. Then when the clamping members **14** are extended they will act on the tapered faces **25** on opposite sides of the die plate **23** to cause movement of the die plate in a direction at right angles to the direction of the movement of the clamping members. During such movement the lower ends of the locating pins **34** enter the locating holes **33** to accurately locate the die plate **23** on the upper shoe. When the clamping members **14** are fully extended to the position shown in full lines in FIG. 1, the upper die plate **23** is tightly clamped against the lower surface of the upper shoe **10**.

In the case of the lower shoe assembly, when the clamping members **114** are in withdrawn position the spring loaded guide bars **136** are elevated so that when the new bottom die plate **123** is slid into position on the upper ends of the guide bars **136** it will be just above the upper ends of the locating pins **134** so that they will not interfere. When air pressure is directed into the inlets **155** of the bottom cylinders it will act on the pistons in the bottom cylinders to cause extension of the plungers **113** and extension of the clamping blocks **114**. During such extension movement the downwardly-facing tapered surfaces **139** of the clamping members **114** will act on the tapered surfaces **125** on opposite sides of the bottom die plate **123**. This will cause downward movement of the die plate **123** at right angles to the direction of movement of the clamping members **114**. During such downward movement the guiding bars **136** will be pushed downwardly against the action of the springs **150** to the full line position shown in FIG. 1. During such movement the locating pins **134** will enter the locating openings **133** of the plate **123** to accurately position said die plate on the bottom shoe. When the clamps **114** are in fully extended position the die plate **123** will be firmly clamped against the upper surface of the bottom shoe **110**.

From the above it is apparent that the die plates **23** and **123** may be quickly replaced and accurately located for a new operation. With a conventional die press a setup of this type took between forty-five minutes and an hour and one-half. With the present invention such setup may be performed in as short a time as five to ten minutes, and in such period both of the die plates will be accurately located and firmly clamped in position.

The operation of the press is conventional. With the upper shoe raised a flat blank is placed on top of the blanking ring **47** and die **46**. Then the upper shoe **10** is forcibly lowered to cause the outer periphery of the blanking ring **18** to cut out the work, leaving the piece of scrap **44**. Upon further closing movement of the press the cut material will be cupped as at **43**, and eventually the rim of the cup will be trimmed, leaving another ring of scrap **45**. During such closing movement the floating pressure pad **48** is pushed downwardly to the position shown in FIG. 1. Also, during operation the bottom die plate is under the influence of a bottom cushion **156** acting as indicated by the arrows. Such bottom cushion is usually actuated by an air cylinder which exerts a predetermined amount of pressure on the bottom shoe **110** in an upward direction. Such bottom air cylinder cushions are conventional and have only been illustrated diagrammatically. After the upper shoe is raised the dies become separated from the condition of FIG. 1 and the knockout member **46** is operated to knock out the work **43**.

Also, the floating pressure pad **48** will knock out the scrap ring **45**, and the stripping ring **26** will knock out the scrap ring **44**.

I wish it to be understood that I do not desire to be limited to the exact details of construction shown and described, for obvious modifications will occur to a person skilled in the art.

I claim:

1. In a forming machine having a support, a tool-carrying plate having oppositely-disposed tapered surfaces, guide means on said support for slideably guiding said plate into partially-assembled position, oppositely-disposed clamping members mounted for extensible and retractible movement toward and away from one another and having tapered surfaces disposed to engage the tapered surfaces of the plate, and means for forcibly moving said clamping members into engagement with said tapered surfaces of the plate to move the plate at right angles to the direction of movement of the clamping members, thereby clamping the plate in operative position on the support, the tapered surfaces being on opposite sides of the plate, and the guide means including spaced guide bars adjacent opposite sides of the plate between which the plate is received, said clamping members, when in retracted position, also serving to support the plate while it is being slid into position between the guide bars.

2. In a forming machine having a support, a tool-carrying plate having oppositely-disposed tapered surfaces, guide means on said support for slideably guiding said plate into partially-assembled position, oppositely-disposed clamping members mounted for extensible and retractible movement toward and away from one another and having tapered surfaces disposed to engage the tapered surfaces of the plate, and means for forcibly moving said clamping members into engagement with said tapered surfaces of the plate to move the plate at right angles to the direction of movement of the clamping members, thereby clamping the plate in operative position on the support, there being cooperating locating means on the support and plate which are aligned when the plate has been slid into partially-assembled position, and the clamping members, when being moved to clamping position, also acting to cause engagement of said locating means, the tapered surfaces being on opposite sides of the plate, and the guide means includes spaced guide bars adjacent opposite sides of the plate between which the plate is received, said clamping members, when in retracted position serve to support the plate while it is being slid into position between the guide bars.

3. A forming machine as claimed in claim **1** in which the support is the top shoe of a punch press, and in which the spaced guides are on the underside of said shoe, and in which the retracted clamping members have their tapered surfaces located to support a partially-assembled plate against the action of gravity.

4. A forming machine as claimed in claim **1** in which the support is the bottom shoe of the punch press and has upstanding locating pins, in which the tool-carrying plate is the bottom die plate of a punch press and has locating holes positioned to receive the locating pins, in which the spaced guides have body portions extensibly recessed in the top surface of said shoe, which body portions have upper ends shaped to slideably support the plate, and in which there is spring means normally urging said spaced guides upwardly a sufficient distance so that the plate may be slid into position without interference from the locating pins.

5. A forming machine as claimed in claim **1** in which the engaging surface of each clamping member is shaped to embrace the adjacent guide bar when the clamping member is in clamping position.

6. In a forming machine having an upper support, a tool-carrying plate disposed below said support and having oppositely-disposed tapered surfaces, oppositely-disposed clamping members mounted for extensible and retractible movement toward and away from one another and having tapered surfaces disposed to engage the tapered surfaces of the plate, and means for forcibly moving the clamping members into engagement with said tapered surfaces of the plate to move the plate at right angles to the direction of movement of the clamping members, thereby clamping the plate in operative position below the support, the tapered surfaces being on opposite sides of the plate and the clamping members, when in retracted position, being in a position to support the plate against downward movement by gravity while it is being slid into preliminary position.

7. A forming machine as claimed in claim **6** in which the means for forcibly moving the clamping members comprises oppositely-disposed fluid pressure operated rams, and in which there is spring means disposed to normally urge said clamping members to fully-extended clamping position as a safety feature in case fluid pressure should be lost in the rams.

8. A forming machine as claimed in claim **6** in which there is a lower support positioned opposite said upper support and having upstanding locating pins, a lower tool-carrying plate supported on top of said lower support and having oppositely-disposed tapered surfaces and having locating holes positioned to receive the locating pins of the lower support, spaced guides extensibly recessed in the top surface of said lower support having upper ends shaped to slideably support the bottom plate, spring means normally urging said spaced guides upwardly a sufficient distance so that the plate may be slid into position without interference from the locating pins, clamping members mounted on said lower support for extensible and retractible movement toward and away from one another and having tapered surfaces disposed to engage the tapered surfaces of the plate, and means for forcibly moving the clamping members into engagement with said tapered surfaces of the plate to move the plate at right angles to the direction of movement of the clamping members and downwardly against the lower support, thereby clamping the plate in operative position on said support.

References Cited

UNITED STATES PATENTS

2,913,946	11/1959	Ellrich	83—630
3,104,574	9/1963	Anderson	83—167
3,225,686	12/1965	Clements	100—43
3,230,869	12/1966	Wilkins	100—214
3,332,308	7/1967	Keen	83—698
3,422,660	1/1969	Countess	72—448
3,422,661	1/1969	Blackhurst	72—448

FOREIGN PATENTS

1,194,227	6/1965	Germany	72—446

CHARLES W. LANHAM, Primary Examiner

G. P. CROSBY, Assistant Examiner

U.S. Cl. X.R.

72—470; 83—698; 100—DIG. 18