Jan. 26, 1926. 1,571,024

W. J. SCHEID

WINDOW LOCK

Filed July 16, 1924

Fig. 1

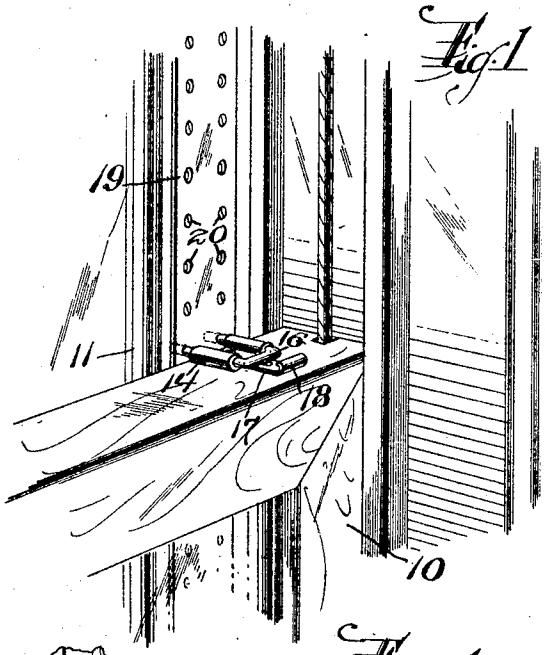

Fig. 2

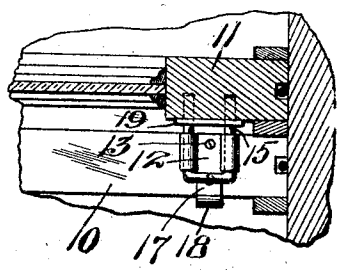

Fig. 3

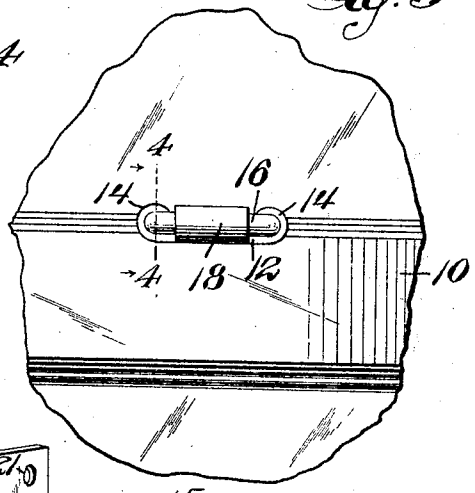

Fig. 4

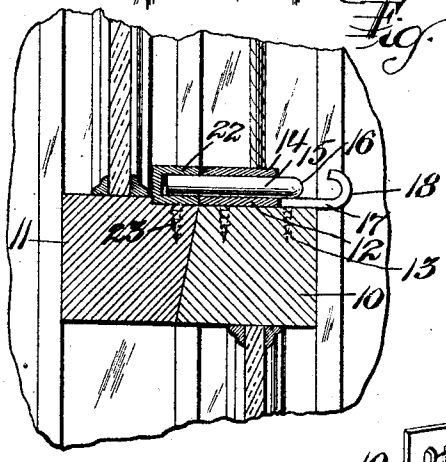

Fig. 5

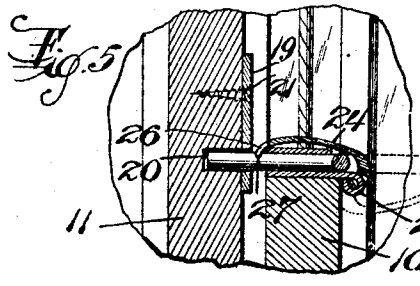

Fig. 6

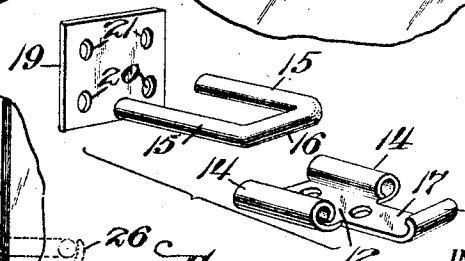

INVENTOR.
Walter J. Scheid,
BY Wm. H. Caulfield.
ATTORNEY

Patented Jan. 26, 1926. 1,571,024

UNITED STATES PATENT OFFICE.

WALTER J. SCHEID, OF NEWARK, NEW JERSEY.

WINDOW LOCK.

Application filed July 16, 1924. Serial No. 726,255.

To all whom it may concern:

Be it known that I, WALTER J. SCHEID, a citizen of the United States, and a resident of Newark, county of Essex, and State of New Jersey, have invented certain new and useful Improvements in Window Locks, of which the following is a specification.

This invention relates to an improved window lock of the type that is secured to the top rail of the lower sash and when in locking position engages an element usually a perforated plate on the upper sash.

The invention relates particularly to the particular form of lock which is made so that it holds a bolt in position, the fixture for the bolt comprising a one-piece metal plate which holds the bolt so that it can be easily installed and when installed is not removable and which is constructed so as to prevent complete withdrawal of the bolt.

The invention is illustrated in the accompanying drawing in which Figure 1 is a perspective view showing the lock installed in a window and in locking position. Figure 2 is a section on Figure 1 showing the lower sash and the lock in elevation. Figure 3 is an edge view of the lock in place and Figure 4 is a section on line 4—4 in Figure 3 showing a modified form of receiving element for the bolt. Figure 5 is a vertical section of a modified form of lock and Figure 6 is a perspective view of the parts of the lock, these parts being shown separated.

In the drawing 10 indicates the lower sash and 11 indicates the upper sash. On the top rail of the lower sash I show the lock which consists of a plate 12 which is secured in any usual way, usually by screws 13, the plate 12 having sleeves 14 formed on the side edges of the plate and parallel. When these plates are made of sheet metal these sheets are formed by bending the metal to form the sleeves and they are bent around the parallel arms 15 of the U-shaped bolt which bolt also includes the cross arm 16 on its rear end.

The plate 12 has a tongue 17 extending from the back thereof with an upturned end 18 to form a stop so as to limit the rearward sliding movement of the bolt as the cross arm 16 at the rear end of the bolt will engage the stop 18 when the free ends of the bolt are withdrawn to the end or just within the end of the sleeves 14.

The U-shaped bolt is usually made from a round bar and the stop 18 is curled so that the cross arm 16 fits in it when the bolt is projected to locking position by pressing on the end 16 of the bolt. The forward or free ends of the bolt are projected into holes in the top sash, these holes being usually guarded by a plate 19 having perforations 20 to receive the bolt. The holes 21 are for screws to pass in the plate 19 to the side rail of the sash.

The plate 19 can be made as shown in Figure 1 if desired, with a series of holes 20 so that the sashes can be locked at various points within their path of travel. In Figure 3 I show a modified form of receiving element comprising a fixture 22 suitably secured as by screws 23 to the bottom rail of the top sash.

In Figure 5 I show a modification in which the tongue 24 is the equivalent of the tongue 17 but it is hinged as at 25 and its free end 26 serves as a stop for the bolt when in the dotted position shown in Figure 5 and serves as a latch when folded forward over the sleeves 14 and enters the notches 27 in the arms 15 of the bolt, thus acting as a latch to hold the bolt in its forward or locking position.

I claim:

1. A window lock comprising a plate having parallel sleeves formed on its side edges and with its back edge provided with a stop, and a U-shaped bolt in the sleeves and adapted to be withdrawn therein when the rear end of the bolt engages the stop and to be projected therefrom when in locking position, and a plate having recesses to receive the ends of the bolt.

2. A window lock comprising a sheet of metal bent at its sides to form parallel sleeves, and having a rearwardly projecting tongue with an upturned end, and a bolt slidable in the sleeves and limited in its rearward movement by the upturned end.

In testimony that I claim the foregoing, I have hereto set my hand, this 1st day of July, 1924.

WALTER J. SCHEID.