(12) INTERNATIONAL APPLICATION PUBLISHED UNDER THE PATENT COOPERATION TREATY (PCT)

(19) World Intellectual Property Organization
International Bureau

(43) International Publication Date
09 May 2019 (09.05.2019)

WIPO | PCT

(10) International Publication Number
WO 2019/086417 A1

(51) International Patent Classification:
A24B 15/30 (2006.01) *A24B 15/14* (2006.01)

(21) International Application Number:
PCT/EP2018/079649

(22) International Filing Date:
30 October 2018 (30.10.2018)

(25) Filing Language: English

(26) Publication Language: English

(30) Priority Data:
17199413.0 31 October 2017 (31.10.2017) EP

(71) Applicant: **PHILIP MORRIS PRODUCTS S.A.** [CH/CH]; Quai Jeanrenaud 3, 2000 Neuchâtel (CH).

(72) Inventors: **BATISTA, Rui Nuno**; Avenue Alois Hugonnet 10, 1110 Morges (CH). **ZUEND, Antoine**; Avenue de l'Hôpital 12, 2400 Le Locle (CH).

(74) Agent: **MONTEVECCHI, Emma** et al.; Cantaluppi & Partners S.r.l., Piazzetta Cappellato Pedrocchi, 18, 35122 Padova (IT).

(81) Designated States *(unless otherwise indicated, for every kind of national protection available)*: AE, AG, AL, AM, AO, AT, AU, AZ, BA, BB, BG, BH, BN, BR, BW, BY, BZ, CA, CH, CL, CN, CO, CR, CU, CZ, DE, DJ, DK, DM, DO, DZ, EC, EE, EG, ES, FI, GB, GD, GE, GH, GM, GT, HN, HR, HU, ID, IL, IN, IR, IS, JO, JP, KE, KG, KH, KN, KP, KR, KW, KZ, LA, LC, LK, LR, LS, LU, LY, MA, MD, ME, MG, MK, MN, MW, MX, MY, MZ, NA, NG, NI, NO, NZ, OM, PA, PE, PG, PH, PL, PT, QA, RO, RS, RU, RW, SA, SC, SD, SE, SG, SK, SL, SM, ST, SV, SY, TH, TJ, TM, TN, TR, TT, TZ, UA, UG, US, UZ, VC, VN, ZA, ZM, ZW.

(84) Designated States *(unless otherwise indicated, for every kind of regional protection available)*: ARIPO (BW, GH, GM, KE, LR, LS, MW, MZ, NA, RW, SD, SL, ST, SZ, TZ, UG, ZM, ZW), Eurasian (AM, AZ, BY, KG, KZ, RU, TJ, TM), European (AL, AT, BE, BG, CH, CY, CZ, DE, DK, EE, ES, FI, FR, GB, GR, HR, HU, IE, IS, IT, LT, LU, LV, MC, MK, MT, NL, NO, PL, PT, RO, RS, SE, SI, SK, SM,

WO 2019/086417 A1

(54) Title: METHOD FOR PRODUCING A SHEET OF A MATERIAL CONTAINING ALKALOIDS AND HOMOGENIZED MATERIAL CONTAINING ALKALOIDS

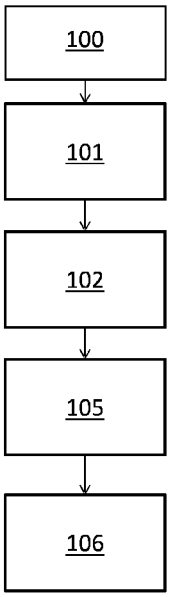

FIG. 1

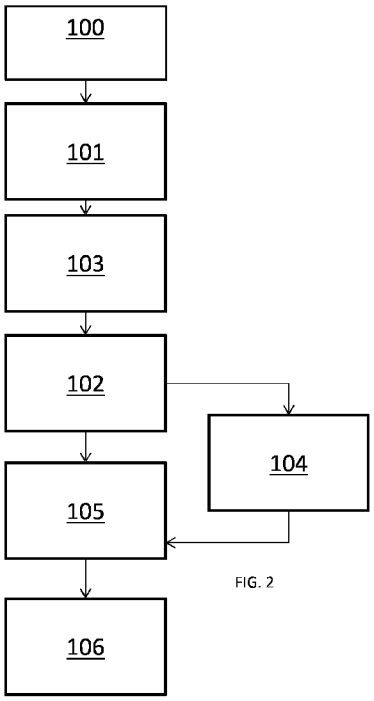

FIG. 2

(57) Abstract: The invention relates to a method for the preparation of a sheet of a material containing alkaloids, said method comprising : - providing particles of the material containing alkaloids having a mean size comprised between about 0.03 millimetres and about 0.12 millimetres; - combining the particles of the material containing alkaloids with a binder, an aerosol former and with an inorganic antisticking material to form a slurry; and - forming the sheet of the material containing alkaloids from the slurry.

[Continued on next page]

TR), OAPI (BF, BJ, CF, CG, CI, CM, GA, GN, GQ, GW, KM, ML, MR, NE, SN, TD, TG).

Published:

— *with international search report (Art. 21(3))*

METHOD FOR PRODUCING A SHEET OF A MATERIAL CONTAINING ALKALOIDS AND HOMOGENIZED MATERIAL CONTAINING ALKALOIDS

The present invention is related to a method for producing a sheet of a material containing alkaloids, such as homogenized tobacco material, and including an antisticking material.

Today, in the manufacture of tobacco products, besides tobacco leaves, also homogenized tobacco material is used. This homogenized tobacco material is typically manufactured from parts of the tobacco plant that are less suited for the production of cut filler, like, for example, tobacco stems or tobacco dust. Typically, tobacco dust is created as a side product during the handling of the tobacco leaves during manufacture.

The starting material for the production of homogenized tobacco material for aerosol-generating article may also be mostly tobacco leaves that have thus the same size and physical properties as the tobacco for the blending of cut filler.

Possible forms of homogenized tobacco material include reconstituted tobacco sheet and cast leaf. The process to form homogenized tobacco material sheets commonly comprises a step in which ground tobacco and a binder are mixed to form a slurry. The slurry is then used to create a tobacco web or sheet, for example by casting a viscous slurry onto a moving metal belt to produce so called cast leaf. Alternatively, a slurry with low viscosity and high water content can be used to create reconstituted tobacco in a process that resembles paper-making.

The sheet or web of homogenized tobacco material is then rolled in bobbins which need to be unwound in order to be further processed and included in the aerosol-forming substrate of the aerosol-forming article.

Unwinding such bobbins can be however a difficult task. The homogenized tobacco material sheet, when coiled in bobbins, may be indeed difficult to unwind due to its consistency, sensitivity to heat, stickiness and low tensile strength: it could easily be torn apart and, if too high tensile strength is used to un-stuck the sheets, the sheets could break.

Furthermore, these bobbins may be difficult to transport and are furthermore currently consumed within a very short timeframe, since otherwise the sheets of homogenized tobacco materials bond together and quite definitively compromise unwinding. Consequently, building up a safety-stock of such bobbins can be a difficult task as well.

There is therefore a need of a method for producing a sheet of material containing alkaloids, such as homogenized tobacco material, that is easily unwound from a bobbin into which is stored and transported, and that therefore allows providing a continuous, constant and regular feed of material so that the rest of the production line can increase the overall production rate.

The invention may satisfy at least one of the above needs.

According to a first aspect of the invention, it relates to a method for the preparation of a sheet of a material containing alkaloids, said method comprising: providing particles of the material containing alkaloids having a mean size comprised between about 0.03 millimetres and about 0.12 millimetres; combining the particles of the material containing alkaloids with a binder and with an antisticking material to form a slurry; and forming the sheet of the material containing alkaloids from the slurry.

The invention relates to a method for the preparation of a sheet of a material containing alkaloids, said method comprising: providing particles of the material containing alkaloids having a mean size comprised between about 0.03 millimetres and about 0.12 millimetres; combining the particles of the material containing alkaloids with a binder, an aerosol-former and with an inorganic antisticking material to form a slurry; and forming the sheet of the material containing alkaloids from the slurry.

A relatively small mean particle size is desired as a starting material containing alkaloids to form the slurry to obtain acceptable homogenized tobacco material for aerosol-generating articles. Further, it has been found that the aerosolization of substances from the material containing alkaloids – such as tobacco - can be improved if the powder of the material containing alkaloids is of the same size or below the size of the cell structure of the material containing alkaloids. It is believed that fine grinding to below about 0.12 millimetres can advantageously open the cell structure of the material containing alkaloids. This breakage of cell structure however may increase the stickiness of the resulting sheet. It is preferred therefore to provide the slurry with antisticking properties. An inorganic antisticking material is added to the material containing alkaloids, together with a binder, to form a slurry. The antisticking material limits the stickiness of any sheet formed casting the slurry. The resulting sheet including the material containing alkaloids and the antisticking material may be wound up into a bobbin comprising a plurality of layers of said sheet one above the others. This bobbin may be easily unwound due to the low stickiness of the sheet including the antisticking material. Adding the antisticking material directly in the slurry allows obtaining a sheet the anti-sticking properties of which are uniform. Further, adding the antisticking material inside the slurry allows the preparation of any sheet's dimension and shape.

The unwinding of the sheet including the material containing alkaloids and the antisticking material or the feeding of the same into the production line is thus possibly facilitated.

As used herein, the term "sheet" denotes a laminar element having a width and length substantially greater than the thickness thereof. The width of a sheet is preferably greater than about 10 millimeters, more preferably greater than about 20 millimeters or about 30 millimeters. Even more preferably, the width of the sheet is comprised between about 100 millimeters and about 300 millimeters.

A "material containing alkaloids" is a material which contains one or more alkaloids. The alkaloids may comprise nicotine. The nicotine may be found, for example, in tobacco.

Alkaloids are a group of naturally occurring chemical compounds that mostly contain basic nitrogen atoms. This group also includes some related compounds with neutral and even weakly acidic properties. Some synthetic compounds of similar structure are also termed alkaloids. In addition to carbon, hydrogen and nitrogen, alkaloids may also contain oxygen, sulfur and, more rarely, other elements such as chlorine, bromine, and phosphorus.

Alkaloids are produced by a large variety of organisms including bacteria, fungi, plants, and animals. They can be purified from crude extracts of these organisms by acid-base extraction. Caffeine, nicotine, theobromine, atropine, tubocurarine are examples of alkaloids.

As used herein, the term "homogenised tobacco material" denotes material formed by agglomerating particulate tobacco, which contains the alkaloid nicotine. The material containing alkaloids can thus be a homogenised tobacco material.

The most commonly used forms of homogenized tobacco material is reconstituted tobacco sheet and cast leaf. The process to form homogenized tobacco material sheets commonly comprises a step in which tobacco dust and a binder, are mixed to form a slurry. The slurry is then used to create a tobacco web. For example by casting a viscous slurry onto a moving metal belt to produce so called cast leaf. Alternatively, a slurry with low viscosity and high water content can be used to create reconstituted tobacco in a process that resembles paper-making.

The sheet material of tobacco can be referred to as a reconstituted sheet material and formed using particulate tobacco (for example, reconstituted tobacco) or a tobacco particulate blend, a humectant and an aqueous solvent to form the tobacco composition. This tobacco composition may be then casted, extruded, rolled or pressed to form a sheet material from the tobacco composition. The sheet of tobacco can be formed utilizing a wet process, where tobacco fines are used to make a paper-like material; or a cast leaf process, where tobacco fines are mixed together with a binder material and cast onto a moving belt to form a sheet.

The sheet of homogenized tobacco material may be then rolled in bobbins which needs to be unwound in order to be further processed, to be part for example of an aerosol-forming article, that is to be included in the aerosol-forming substrate of the aerosol-forming article. In a "heat-not-burn" aerosol-generating article, an aerosol-forming substrate is heated to a relatively low temperature, in order to form an aerosol but prevent combustion of the tobacco material. Further, the tobacco present in the homogenized tobacco sheet is typically the only tobacco, or includes the majority of the tobacco, present in the homogenized tobacco material of such a "heat-not-burn" aerosol-generating article. This means that the aerosol composition that is generated by such a "heat-not-burn" aerosol-

generating article is substantially only based on the homogenized tobacco material.

As used herein, the term "aerosol forming material" denotes a material that is capable of releasing volatile compounds upon heating to generate an aerosol. Tobacco, together with other compounds, may be classed as an aerosol forming material, particularly a sheet of homogenized tobacco comprising an aerosol former. An aerosol forming substrate may comprise or consist of an aerosol forming material.

The homogenized tobacco sheet generally includes, in addition to the tobacco, a binder and an aerosol-former, such as guar and glycerin. This composition leads to a sheet which may be "sticky", that is, it glues to adjacent objects, and at the same time it is rather fragile having a relatively low tensile strength.

Once a sheet of material containing alkaloids is produced, such as a sheet of homogenized tobacco material, it often needs to be stored at least for a certain time before it is further processed. In order to store it properly, without or with minimal risks of breakage or without occupying too much space, it is commonly wound into bobbins. However, winding the alkaloids containing sheet in a bobbin as such may create several problems in the subsequent unwinding, due to the "sticky" properties of the sheets. Due to the fact that the alkaloids containing sheet is sticky, the layers formed in the bobbin by the sheet wound in itself are prone to glue one onto the others, preventing unwinding.

In order to simplify the unwinding, or to anyhow produce a sheet of material which is relatively easy to handle, according to the invention a sheet including a material containing alkaloids and an antisticking material is provided.

In order to produce the sheet of a material containing alkaloids and an antisticking material, a slurry including a material containing alkaloids is first provided.

The slurry includes particles of the material including alkaloids. As a possible example of the material including alkaloids, tobacco is used.

In the present invention, the slurry may be formed by tobacco lamina and stem of different tobacco types, which are properly blended. With the term "tobacco type" one of the different varieties of tobacco is meant. With respect to the present invention, these different tobacco types are distinguished in three main groups of bright tobacco, dark tobacco and aromatic tobacco. The distinction between these three groups is based on the curing process the tobacco undergoes before it is further processed in a tobacco product.

Bright tobaccos are tobaccos with a generally large, light coloured leaves. Throughout the specification, the term "bright tobacco" is used for tobaccos that have been flue cured. Examples for bright tobaccos are Chinese Flue-Cured, Flue-Cured Brazil, US Flue-Cured such as Virginia tobacco, Indian Flue-Cured, Flue-Cured from Tanzania or other African Flue Cured. Bright tobacco is characterized by a high sugar to nitrogen ratio. From a sensorial perspective, bright tobacco is a tobacco type which, after curing, is associated with a spicy and lively sensation. According to the invention, bright tobaccos are tobaccos with a content of reducing sugars of between about 2.5 percent and about 20 percent of dry weight base of the leaf and a total ammonia content of less than about 0.12 percent of dry weight base of the leaf. Reducing sugars comprise for example glucose or fructose. Total ammonia comprises for example ammonia and ammonia salts.

Dark tobaccos are tobaccos with a generally large, dark coloured leaves. Throughout the specification, the term "dark tobacco" is used for tobaccos that have been air cured. Additionally, dark tobaccos may be fermented. Tobaccos that are used mainly for chewing, snuff, cigar, and pipe blends are also included in this category. From a sensorial perspective, dark tobacco is a tobacco type which, after curing, is associated with a smoky, dark cigar type sensation. Dark tobacco is characterized by a low sugar to nitrogen ratio. Examples for dark tobacco are Burley Malawi or other African Burley, Dark Cured Brazil Galpao, Sun Cured or Air Cured Indonesian Kasturi. According to the invention, dark tobaccos are tobaccos with a content of reducing sugars of less than about 5 percent of dry weight base of the leaf and a total ammonia content of up to about 0.5 percent of dry weight base of the leaf.

Aromatic tobaccos are tobaccos that often have small, light coloured leaves. Throughout the specification, the term "aromatic tobacco" is used for other tobaccos that have a high aromatic content, for example a high content of essential oils. From a sensorial perspective, aromatic tobacco is a tobacco type which, after curing, is associated with spicy and aromatic sensation. Example for aromatic tobaccos are Greek Oriental, Oriental Turkey, semi-oriental tobacco but also Fire Cured, US Burley, such as Perique, Rustica, US Burley or Meriland.

Additionally, a blend may comprise so called filler tobaccos. Filler tobacco is not a specific tobacco type, but it includes tobacco types which are mostly used to complement the other tobacco types used in the blend and do not bring a specific characteristic aroma direction to the final product. Examples for filler tobaccos are stems, midrib or stalks of other tobacco types. A specific example may be flue cured stems of Flue Cured Brazil lower stalk.

Within each type of tobaccos, the tobacco leaves are further graded for example with respect to origin, position in the plant, colour, surface texture, size and shape. These and other characteristics of the tobacco leaves are used to form a tobacco blend. A blend of tobacco is a mixture of tobaccos belonging to the same or different types such that the tobacco blend has an agglomerated specific characteristic. This characteristic can be for example a unique taste or a specific aerosol composition when heated or burned. A blend comprises specific tobacco types and grades in a given proportion one with respect to the other.

In order to produce a slurry, the selected material containing alkaloids, such as the selected tobacco types, are to be ground in order to achieve a proper size, for example a size which is suitable for forming a slurry.

Preferably, the particles used in the slurry comprises particles of a material containing alkaloids, such as tobacco powder, having a mean size of between about 0.03 millimetres and about 0.12 millimetres. The mean size of between about 0.03 millimetres and about 0.12 millimetres represents the size at which the cells of the material may be at least in part destroyed. Moreover, the slurry obtained using the particles having this mean size is smooth and uniform.

Preferably, in order to minimize the energy used to obtain particles of the above mentioned size, the grinding phase is divided into two steps. For example, a coarse grinding step can be followed by a fine grinding step till the desired mean size of the particles is obtained. The coarse grinding step may comprise grinding material containing alkaloids strips into the smallest possible size while at the same time their cell structure remains substantially undamaged. Thus, the coarsely ground particles of the material containing alkaloids remain substantially dry. This is advantageous as the dry particles can be handled easily, for example for storing, blending and other

subsequent processes. It has been found that, due to the inclusion of the coarse grinding step, the energy consumption in the further fine grinding step can be advantageously reduced by about 30 percent. This reduction in energy consumption in the fine grinding step is therefore available to increase the possible throughput through the fine grinding step when the energy consumption is kept at the same level as without the coarse grinding. Advantageously, this also allows decreasing the cost of production as less sophisticated machinery needs to be utilized to manufacture the coarse ground tobacco particles than is required for the manufacture of fine ground tobacco powder.

Therefore, in a preferred step the material containing alkaloids is coarse grinded, that is, it is reduced to a particle size in which the cells are on average not broken or destroyed. Advantageously, at this stage, the resulting coarse ground material containing alkaloids stays dry, such that any viscous or sticky behaviour of the resulting coarse ground material containing alkaloids is avoided.

After this first coarse grinding, in an additional grinding step the material containing alkaloids is preferably ground into a powder with a mean particle size which is suitable for the formation of a slurry. In this second grinding step, the cells of the material containing alkaloids may be to some extent or completely destroyed.

By reducing the powder mean size, less binder may be required to form the sheets described herein. It is also believed that by fine grinding the material containing alkaloids to a finer powder size, substances within the cells can be released in a relatively easy manner, such as for example – in case of tobacco - pectin, nicotine, essential oils and other flavours.

Preferably, the step of coarse grinding according to the invention comprises coarse grinding said material containing alkaloids, for example tobacco leaves, to obtain particles of a mean size of between about 0.25 millimetres and about 2.0 millimetres, more preferably, a mean size of between about 0.3 millimetres and about 1.0 millimetres and most preferably, a mean size of between about 0.3 millimetres and about 0.6 millimetres. At the size of between about 0.25 millimetres and about 2 millimetres, the cells of the material containing alkaloids are still substantially intact such that the handling of the coarse ground material containing alkaloids is relatively easy.

These particles of the material containing alkaloids are added together with a binder and an antisticking material in order to form a slurry.

Preferably, an aerosol former is added as well.

The addition of the antisticking material allows creating a final product, such as a sheet, which has a reduced thickness, so that bobbins formed by the sheet are more easily handled and unwind. A sheet formed by a slurry including an anti-sticking material is less "sticky" than a sheet which includes only the material including alkaloids and the binder. In particular, the relatively small sizes of the particles of the material containing alkaloids which are included in the slurry may render the latter particularly sticky when cast.

Due to the facilitated handling of the sheet, production speed may be increased.

Preferably, the slurry comprises from about 1 percent and about 5 percent in dry weight basis of the binder. More preferably, it is comprised between about 2 percent and about 4 percent. In addition to controlling the sizes of the particles used in the process of the present invention, it is also

advantageous to add a binder, such as any of the gums or pectins described herein, to ensure that the particles of material containing alkaloids remain substantially dispersed throughout the cast sheet. For a descriptive review of gums, see Gums And Stabilizers For The Food Industry, IRL Press (G.O. Phillip et al. eds. 1988); Whistler, Industrial Gums: Polysaccharides And Their Derivatives, Academic Press (2d ed. 1973); and Lawrence, Natural Gums For Edible Purposes, Noyes Data Corp. (1976).

Although any binder may be employed, preferred binders are natural pectins, such as fruit, citrus or tobacco pectins; guar gums, such as hydroxyethyl guar and hydroxypropyl guar; locust bean gums, such as hydroxyethyl and hydroxypropyl locust bean gum; alginate; starches, such as modified or derivitized starches; celluloses, such as methyl, ethyl, ethylhydroxymethyl and carboxymethyl cellulose; tamarind gum; dextran; pullalon; konjac flour; xanthan gum and the like. The particularly preferred binder for use in the present invention is guar.

Preferably, the slurry comprises from about 45 percent to about 93 percent in dry weight basis of the particles of the material containing alkaloids. The preferred amount of particles may also depend on the sheet forming process.

Preferably, the slurry comprises from about 0.2 percent and about 5 percent in dry weight basis of the antisticking material. Preferably, the antisticking material is included in an amount enough to show the properties of antisticking in the final product (the sheet), but not high enough to significantly influence the production of aerosol when the sheet is used as a part of an aerosol-generating article.

Preferably, the method also includes adding to the slurry cellulose fibers, in addition to the cellulose fibers already present in the tobacco.

Cellulose fibres may be introduced in the slurry. The introduction of cellulose fibres in the slurry typically increases the tensile strength of the tobacco material web, acting as a strengthening agent. Therefore, adding cellulose fibres may increase the resilience of the homogenized tobacco material web.

Cellulose fibres for including in a slurry for homogenized tobacco material are known in the art and include, but are not limited to: soft-wood fibres, hard wood fibres, jute fibres, flax fibres, tobacco fibres and combination thereof. In addition to pulping, the cellulose fibres might be subjected to suitable processes such as refining, mechanical pulping, chemical pulping, bleaching, sulphate pulping and combination thereof.

Cellulose fibres may include tobacco stem materials, stalks or other tobacco plant material. Preferably, cellulose fibres such as wood fibres comprise a low lignin content. Alternatively fibres, such as vegetable fibres, may be used either with the above fibres or in the alternative, including hemp and bamboo.

Preferably, the method comprises: pulping and refining cellulose fibres to obtain fibres having a mean size comprised between about 0.2 millimetres and about 4 millimetres; and adding the cellulose fibres when forming the slurry.

More preferably, the slurry comprises from about 1 percent to about 7 percent per weight on a dry weight basis of the cellulose fibres.

A cellulose pulp includes water and cellulose fibres. Cellulose fibres for including in a slurry for a sheet of a material containing alkaloids are known in the art and include, but are not limited to: soft-wood fibres, hard wood fibers, jute fibres, flax fibres, tobacco fibres and combination thereof. In addition to pulping, the cellulose fibres might be subjected to suitable

processes such as refining, mechanical pulping, chemical pulping, bleaching, sulphate pulping and combination thereof.

Fibres particles may include tobacco stem materials, stalks or other tobacco plant material. Preferably, cellulose-based fibres such as wood fibres comprise a low lignin content. Fibres particles may be selected based on the desire to produce a sufficient tensile strength for the cast leaf. Alternatively fibres, such as vegetable fibres, may be used either with the above fibres or in the alternative, including hemp and bamboo.

During the processing from the slurry to a final homogenized material containing alkaloids to be cut and introduced in an aerosol-generating device, alkaloids-containing sheets are often required to withstand wetting, conveying, drying and cutting. The ability of the homogenized web of the material containing alkaloids to withstand the rigors of processing with minimal breakage and defect formation is a highly desirable characteristic since it reduces the loss of material containing alkaloids. The introduction of cellulose fibres in the slurry increases the tensile strength to traction of the web of material, acting as a strengthening agent. Therefore adding cellulose fibres may increase the resilience of the homogenized material containing alkaloids and thus reduce the manufacturing cost of the aerosol- generating device and other smoking articles.

The density of the slurry, in particular before a step of casting the slurry to form a homogenized web or sheet, is important for determining the end quality of the web itself. A proper slurry density and homogeneity minimizes the number of defects and maximizes tensile strength of the web.

Preferably, the method includes the step of adding to the slurry an aerosol-former.

Preferably, the aerosol-former content in the sheet is greater than about 5 percent on a dry weight basis. More preferably, the method includes the step of adding an aerosol-former to the slurry in an amount comprised between about 5 percent and about 30 percent in dry weight basis. More preferably, the aerosol-former is comprised between about 10 percent to about 25 percent in dry weight basis of the slurry. More preferably, the aerosol-former is comprised between about 15 percent to about 25 percent in dry weight basis of the slurry.

Suitable aerosol-formers for inclusion in slurry for webs of homogenised material containing alkaloids are known in the art and include, but are not limited to: monohydric alcohols like menthol, polyhydric alcohols, such as triethylene glycol, 1,3-butanediol and glycerin; esters of polyhydric alcohols, such as glycerol mono-, di- or triacetate; and aliphatic esters of mono-, di- or polycarboxylic acids, such as dimethyl dodecanedioate and dimethyl tetradecanedioate.

Examples of preferred aerosol-formers are glycerin and propylene glycol.

Preferably, the method of the invention comprises the step of mixing the binder and the aerosol-former before adding the binder and the aerosol-former to the particles of material containing alkaloids. Pre-mixing the binder and the aerosol-former before mixing the rest of the slurry has the advantage that otherwise, the binder may gel when it is put in contact with water. The gelling may lead to an unintended non-uniform mixing of a slurry used to produce the homogenized material containing alkaloids. To avoid or postpone as much as possible this gelation, it is preferred that the binder and the aerosol-former are mixed together before the introduction of any other compound in the slurry so that the binder and the aerosol-former can form a suspension.

Preferably, the step of forming the sheet of material containing alkaloids from the slurry includes: casting a sheet web of the slurry; and drying the cast sheet web.

The homogenized material containing alkaloids may be cast leaf tobacco. The slurry used to form the cast leaf includes tobacco powder and preferably one or more of fibre particles, aerosol formers, flavours, and binders. Particles of material containing alkaloids may be of the form of powder having a mean size on the order between about 0.03 millimetres and about 0.12 millimetres depending on the desired web thickness and casting gap.

A web of homogenized material containing alkaloids is preferably formed by a casting process of the type generally comprising casting a slurry prepared including the blend of tobacco powder above described on a support surface. Preferably, the cast web is then dried to form a web of homogenized material containing alkaloids and it is then removed from the support surface.

Preferably, the moisture of said cast material containing alkaloids web at casting is between about 60 percent and about 80 percent of the total weight of the tobacco material at casting. Preferably, the method for production of a homogenized material containing alkaloids comprises the step of drying said cast web, winding said cast web, wherein the moisture of said cast web at winding is between about 7 percent and about 15 percent of dry weight of the material containing alkaloids web. Preferably, the moisture of said homogenized tobacco web at winding is between about 8 percent and about 12 percent of dry weight of the homogenized material containing alkaloids web.

Preferably, the inorganic antisticking material comprises a silicon based material. More preferably, it comprises talc powder.

The antisticking material and compounds are preferably selected among those listed and approved as additives for Food & Beverage and Pharma industries as neutral expedients additives, preferably also as inactive ingredients. Preferably the antisticking material can be applied in aqueous forms within several dilution ratios depending of the type of application. Even more preferably, the antisticking materials are selected among those which are cellulose based. Indeed, when the material containing alkaloids comprises cellulose fibers there is a natural compatibility of those ingredients in many ways, including chemical stability during, and after, drying.

Preferably, the antisticking material during the combining step is in powder form, in liquid form or in slurry form. The antisticking material, when added to the other components forming the slurry, may be in any suitable form, for example already processed to form a slurry.

Preferably, the antisticking material is in nano-encapsulated and/or micro-encapsulated form.

The antisticking material in nano-encapsulated and/or micro-encapsulated form can be designed in a way that it degrades in a defined predictable way only under certain conditions, and therefore it releases its content only when such conditions are met. By way of example, an antisticking material in nano-encapsulated and/or micro-encapsulated form may comprise a capsule material that is sensitive to temperature, and/or humidity. In this way, the antisticking material in nano-encapsulated and/or micro-encapsulated form may release its content when the environmental temperature, and/or humidity, is/are above a certain defined value(s). This can be particularly useful when adverse environmental conditions are present that may directly promote stickiness, and therefore avoiding or preventing such stickiness is desired.

An antisticking material in nano-encapsulated and/or micro-encapsulated form may comprise a capsule material that is degradable in a certain defined predictable time, for example when exposed to the material containing alkaloids. In this way, the antisticking material in nano-encapsulated and/or micro-encapsulated form would release its content at a defined rate. This can be particularly useful in order to create a defined time delay effect of the release of the antisticking material independently of other factors, knowing that the stickiness problem only occurs after a certain time, and therefore releasing the antisticking material only when it is expected that the stickiness problem may occur. This delay may avoid or prevent potential problems of an early contact of the antisticking material with the material containing alkaloids, namely potential migration over time of the antisticking material to the interior of the material containing alkaloids, instead of remaining on its surfaces, and therefore causing inefficiencies in the antisticking effect on the surface of the material.

Preferably, the material containing alkaloids comprises a tobacco material.

According to a second aspect, the invention relates to an homogenized material containing alkaloids comprising: particles of the material containing alkaloids having a mean size comprised between about 0.03 millimetres and about 0.12 millimetres; a binder; an antisticking material; and water.

The invention relates to a homogenized material containing alkaloids comprising: particles of the material containing alkaloids having a mean size comprised between about 0.03 millimetres and about 0.12 millimetres; a binder; an aerosol-former; an inorganic antisticking material; and water.

The advantages of such a composition suitable to form a sheet have been already listed with reference to the first aspect of the invention and are not repeated herewith.

Preferably, the homogenized material containing alkaloids comprises from about 1 percent and about 5 percent in dry weight basis of the binder.

Preferably, the homogenized material containing alkaloids comprises from about 45 percent and about 93 percent in dry weight basis of the particles of a material containing alkaloids.

Preferably, the homogenized material containing alkaloids comprises from about 0.2 percent and about 5 percent in dry weight basis of the antisticking material.

Preferably, the homogenized material containing alkaloids comprises from about 1 percent to about 7 percent per weight on a dry weight basis of cellulose fibres, the cellulose fibres having a mean length comprised between about 0.2 millimetres and about 4 millimetres.

Preferably, the antisticking material is selected from the group consisting of talc, sodium stearyl fumarate, sodium benzoate, magnesium stearate, or a mixture thereof.

Preferably, the homogenized material containing alkaloids comprises between about 5 percent and about 30 percent in dry weight basis of an aerosol-former.

Preferably, the material containing alkaloids is a tobacco material.

According to a third aspect, the invention relates to an aerosol-generating article, comprising a component prepared from the homogenized material containing alkaloids of the second aspect of the invention or from the method of the first aspect of the invention.

Aerosol forming articles according to the present invention may be in the form of filter cigarettes or other smoking articles in which tobacco material is combusted to form smoke. The present invention additionally

encompasses articles in which tobacco material is heated to form an aerosol, rather than combusted, and articles in which a nicotine-containing aerosol is generated from a tobacco material without combustion or heating.

Aerosol forming articles according to the invention may be whole, assembled aerosol forming articles or components of aerosol forming articles that are combined with one or more other components in order to provide an assembled article for producing an aerosol, such as for example, the consumable part of a heated smoking device.

An aerosol forming article may be an article that generates an aerosol that is directly inhalable into a user's lungs through the user's mouth. An aerosol forming article may resemble a conventional smoking article, such as a cigarette and may comprise tobacco. An aerosol forming article may be disposable. An aerosol forming article may alternatively be partially-reusable and comprise a replenisheable or replaceable aerosol forming substrate.

An aerosol forming article may also include a combustible cigarette. In preferred embodiments, the aerosol forming- article may be substantially cylindrical in shape. The aerosol forming article may be substantially elongated. The aerosol forming article may have a length and a circumference substantially perpendicular to the length. The aerosol forming article may have a total length between approximately about 30 millimeters and approximately about 100 millimeters. The aerosol forming article may have an external diameter between approximately about 5 millimeters and approximately about 12 millimeters.

In all the aspects of the invention, preferably, the sheet including a material containing alkaloids is a homogenized tobacco sheet, where the material containing alkaloids is tobacco containing nicotine.

Preferably, the homogenized tobacco sheet includes a binder.

Preferably, the homogenized tobacco material comprises a binder in an amount between about 1 percent and about 5 percent in dry weight basis of the homogenized tobacco material.

It is advantageous to add a binder, such as any of the gums or pectins described herein, to ensure that the tobacco powder remains substantially dispersed throughout the homogenized tobacco web. For a descriptive review of gums, see Gums And Stabilizers For The Food Industry, IRL Press (G.O. Phillip et al. eds. 1988); Whistler, Industrial Gums: Polysaccharides And Their Derivatives, Academic Press (2d ed. 1973); and Lawrence, Natural Gums For Edible Purposes, Noyes Data Corp. (1976).

Although any binder may be employed, preferred binders are natural pectins, such as fruit, citrus or tobacco pectins; guar gums, such as hydroxyethyl guar and hydroxypropyl guar; locust bean gums, such as hydroxyethyl and hydroxypropyl locust bean gum; alginate; starches, such as modified or derivitized starches; celluloses, such as methyl, ethyl, ethylhydroxymethyl and carboxymethyl cellulose; tamarind gum; dextran; pullalon; konjac flour; xanthan gum and the like. The particularly preferred binder for use in the present invention is guar.

Preferably, the homogenized tobacco sheet includes an aerosol-former.

Preferably, the homogenized tobacco material comprises an aerosol-former in an amount between 5 about percent and about 30 percent in dry weight basis of the homogenized tobacco material.

Suitable aerosol-formers for inclusion in slurry for webs of homogenised tobacco material are known in the art and include, but are not limited to: monohydric alcohols like menthol, polyhydric alcohols, such as triethylene glycol, 1,3-butanediol and glycerine; esters of polyhydric alcohols, such as

glycerol mono-, di- or triacetate; and aliphatic esters of mono-, di- or polycarboxylic acids, such as dimethyl dodecanedioate and dimethyl tetradecanedioate.

Preferably, the homogenized tobacco sheet includes tobacco particles.

Preferably, the homogenized tobacco material comprises from about 45 percent to about 93 percent in dry weight basis of the tobacco particles.

Preferably, the homogenized tobacco sheet includes cellulose fibers in addition to those already present in the tobacco.

Preferably, the homogenized tobacco material comprises cellulose fibers in an amount between about 1 percent and about 3 percent in dry weight basis of the homogenized tobacco material. A cellulose pulp includes water and cellulose fibres. Cellulose fibres for including in a slurry for homogenized tobacco material are known in the art and include, but are not limited to: soft-wood fibres, hard wood fibres, jute fibres, flax fibres, hemp fibres, tobacco fibres and combination thereof. In addition to pulping, the cellulose fibres might be subjected to suitable processes such as refining, mechanical pulping, chemical pulping, bleaching, sulphate pulping and combination thereof.

Fibres particles may include tobacco stem materials, stalks or other tobacco plant material. Preferably, cellulose-based fibres such as wood fibres comprise a low lignin content. Fibres particles may be selected based on the desire to produce a sufficient tensile strength for the cast leaf versus a low inclusion rate, for example, a rate between about 2 percent and about 15 percent. Alternatively fibres, such as vegetable fibres, may be used either with the above fibres or in the alternative, including hemp and bamboo.

The binder and the cellulose fibers are preferably included in a weight ratio comprised between about 1:7 and about 5:1. More preferably, the binder and the cellulose fibers are included in a weight ratio comprised between about 1:1 and about 3:1.

The binder and the aerosol-former are preferably included in a weight ratio comprised between about 1:30 and about 1:1. More preferably, the binder and the aerosol-former are included in a weight ratio comprised between about 1:20 and about 1:4.

The binder and the tobacco particles are preferably included in a weight ratio comprised between about 1:100 and about 1:10. More preferably, the binder and the tobacco particles are included in a weight ratio comprised between about 1:50 and about 1:15, even more preferably between about 1:30 and 1:20.

The aerosol-former and the tobacco particles are preferably included in a weight ratio comprised between about 1:20 and about 1:1. More preferably, the aerosol-former and the tobacco particles are included in a weight ratio comprised between about 1:6 and about 1:2.

The aerosol former and the cellulose fibres are preferably included in a weight ratio comprised between about 1:1 and about 30:1. More preferably, the aerosol-former and the cellulose fibres are included in a weight ratio comprised between about 5:1 and about 15:1.

The cellulose fibres and the tobacco particles are preferably included in a weight ratio comprised between about 1:100 and about 1:10. More preferably, the cellulose fibres and the tobacco particles are preferably included in a weight ratio comprised between about 1:50 and about 1:20.

The above mentioned weight ratios of the ingredients of the homogenized tobacco sheet are applicable not only to the homogenized tobacco sheet,

but also they are the weight ratios of the various ingredients present in the slurry.

A web of homogenized tobacco material is preferably formed by a casting process of the type generally comprising casting a tobacco slurry onto a moving metal belt. Preferably, the cast web is dried to form a web of homogenized tobacco material and it is then removed from the support surface.

Specific embodiments of the invention will be further described, by way of example only, with reference to the accompanying drawings in which:

- Figure 1 shows a flow diagram of a method to produce slurry for homogenized tobacco material according to the invention;
- Figure 2 shows a block diagram of a variant of the method of Figure 1;
- Figure 3 shows a block diagram of a method for production of a homogenized tobacco material according to the invention;
- Figure 4 shows an enlarged view of one of the steps of the method of Figures 1, 2 or 3;
- Figure 5 shows a schematic view of an apparatus for performing the method of Figures 1 and 2; and
- Figure 6 shows a schematic view of an apparatus for performing the method of figure 3.

With initial reference to fig. 1, a method for the production of slurry according to the present invention is represented. The first step of the method of the invention is the selection 100 of the tobacco types and tobacco grades to be used in the tobacco blend for producing the homogenized tobacco material. Tobacco types and tobacco grades used in

the present method are for example bright tobacco, dark tobacco, aromatic tobacco and filler tobacco.

Only the selected tobacco types and tobacco grades intended to be production of the used for the homogenized tobacco material undergo the processing according to following steps of the method of the invention.

The method includes a further step 101 in which the selected tobacco is laid down. This step may comprise checking the tobacco integrity, such as grade and quantity, which can be for example verified by a bar code reader for product tracking and traceability. After harvesting and curing, the leaf of tobacco is given a grade, which describes for example the stalk position, quality, and colour.

Further, the lay down step 101 might also include, in case the tobacco is shipped to the manufacturing premises for the production of the homogenized tobacco material, de-boxing or case opening of the tobacco boxes. The de-boxed tobacco is then preferably fed to a weighing station in order to weight the same.

Moreover, the tobacco lay down step 101 may include bale slicing, if needed, as the tobacco leaves are normally compressed into bales in shipping boxes for shipping.

The following steps are performed for each tobacco type, as detailed below. These steps may be performed subsequently per grade such that only one production line is required. Alternatively, the different tobacco types may be processed in separate lines. This may be advantageous where the processing steps for some of the tobacco types are different. For example, in conventional primary tobacco processes bright tobaccos and dark tobaccos are processed at least partially in separate processes, as the dark tobacco often receives an additional casing. However, according to the

present invention, preferably, no casing is added to the blended tobacco powder before formation of the homogenized tobacco web.

Further, the method may include a step 102 of coarse grinding of the tobacco leaves.

According to a variant of the method of the invention, after the tobacco lay down step 101 and before the tobacco coarse grinding step 102, a further shredding step 103 is performed, as depicted in fig. 2. In the shredding step 103 the tobacco is shredded into strips having a mean size comprised between about 2 millimetres and about 100 millimetres.

Preferably, after the shredding step 103, a step of removal of non-tobacco material from the strips is performed (not depicted in figs. 1 and 2).

Subsequently, the shredded tobacco is transported towards the coarse grinding step 102. The flow rate of tobacco into a mill to coarse grind the strips of tobacco leaf is preferably controlled and measured.

In the coarse grinding step 102, the tobacco strips are reduced to a mean particle size of between about 0.25 millimetres and about 2 millimetres. At this stage, the tobacco particles are still with their cells substantially intact and the resulting particles do not pose relevant transport issues.

The method of the invention may include an optional step 104, depicted in figure 2, which includes packing and shipping the coarse grinded tobacco. This step 104 is performed in case the coarse grinding step 102 and the subsequent step of the method of the invention are performed in different manufacturing facilities.

Preferably, after the coarse grinding step 102, the tobacco particles are transported, for example by pneumatic transfer, to a blending step 105. Alternatively, the step of blending 105 could be performed before the step of coarse grinding 102, or where present, before the step of shredding 103,

or, alternatively, between the step of shredding 103 and the step of coarse grinding 102.

In the blending step 105, all the coarse grinded tobacco particles of the different tobacco types selected for the tobacco blend are blended. The blending step 105 therefore is a single step for all the selected tobacco types. This means that after the step of blending there is only need for a single process line for all of the different tobacco types. In figure 4 is represented the blending of four coarse grinded tobacco particles of four different tobacco types selected for a tobacco blend, respectively schematically indicated by boxes 1, 2, 3 and 4.

In the blending step 105, preferably mixing of the various tobacco types in particles is performed. Preferably a step of measuring and controlling one or more of the properties of the tobacco blend is performed. According to the invention, the flow of tobacco may be controlled such that the desired blend according to a pre-set target value or pre-set target values is obtained. For example, it may be desirable that the blend includes bright tobacco 1 at least for about 30 percent in dry weight of the total tobacco in the blend, and that dark tobacco 2 and aromatic tobacco 3 are comprised in a percentage between about 0 percent and about 40 percent in dry weight of the total tobacco in the blend, for example about 35 percent. More preferably, also filler tobacco 4 is introduced in a percentage between about 0 percent and about 20 percent in dry weight of the total tobacco in the blend. The flow rate of the different tobacco types is therefore controlled so that this ratio of the various tobacco types is obtained. Alternatively, where the coarse grinding step 102 is done subsequently for the different tobacco leaves used, the weighing step at the beginning of the step 102 determines the amount of tobacco used per tobacco type and grade instead of controlling its flow rate.

In Fig. 4, the introduction of the various tobacco types during the blending step 105 is shown.

It is to be understood that each tobacco type could be itself a sub-blend, in other words, the "bright tobacco type" could be for example a blend of Virginia tobacco and Brazil flue-cured tobacco of different grades.

After the blending step 105, a fine grinding step 106, to a tobacco powder mean size of between about 0.03 millimetres and about 0.12 millimetres is performed. This fine grinding step 106 reduces the size of the tobacco down to a powder size suitable for the slurry preparation. After this fine grinding step 106, the cells of the tobacco are at least partially destroyed and the tobacco powder may become sticky.

The so obtained tobacco powder can be immediately used to form the tobacco slurry. Alternatively, a further step of storage of the tobacco powder, for example in suitable containers may be inserted (not shown).

With reference to fig. 3, a method of the invention for a manufacture of a homogenized tobacco web is shown. From step 106 of fine grinding, the tobacco powder is used in a subsequent slurry preparation step 107. Prior to or during the slurry preparation step 107, the method of the invention may include two further steps: a pulp preparation step 108 where cellulose fibres 5 and water 6 are pulped to uniformly disperse and refine the fibres in water, and a suspension preparation step 109, where an aerosol-former 7 and a binder 8 are premixed. Preferably the aerosol-former 7 includes glycerol and the binder 8 includes guar. Advantageously, the suspension preparation step 109 includes premixing guar and glycerol without the introduction of water.

The slurry preparation step 107 preferably comprises transferring the premix solution of the aerosol-former and the binder to a slurry mixing tank

and transferring the pulp to the slurry mixing tank. Further, the slurry preparation step comprises dosing the tobacco powder blend into the slurry mixing tank with pulp, and the guar - glycerol suspension. More preferably, this step also includes processing the slurry with a high shear mixer to ensure uniformity and homogeneity of the slurry.

Preferably, the slurry preparation step 107 also includes a step of water addition, where water is added to the slurry to obtain the desired viscosity and moisture.

Further, the slurry preparation step 107 also includes the addition of an anti-sticking material 9. Preferably this antisticking material is added in an amount that remain existing in from about 0.2 percent and about 5 percent in dry weight basis of the casted resulting sheet as dry final product at room temperature (applicable ISO standard temperature). Preferably, talc powder is used as antisticking material.

In order to form the homogenized tobacco web, preferably the slurry formed according to step 107 is cast in a casting step 110. Preferably, this casting step 110 includes transporting the slurry to a casting station and casting the slurry into web having a homogenous and uniform film thickness on a support. Preferably, during casting, the cast web thickness, moisture and density are controlled immediately after casting and more preferably are also continuously monitored and feedback-controlled using slurry measuring devices during the whole process.

The homogenized cast web is then dried in a drying step 111 comprising a uniform and gentle drying of the cast web, for example in an endless, stainless steel belt dryer. The endless, stainless steel belt dryer may comprise individually controllable zones. Preferably the drying step comprises monitoring the cast leaf temperature at each drying zone to

ensure a gentle drying profile at each drying zone and heating the support where the homogenized cast web is formed. Preferably, the drying profile is a so called TLC drying profile.

At the conclusion of the web drying step 111, a monitoring step (not shown) is executed to measure the moisture content and number of defects present in the dried web.

The homogenized tobacco web that has been dried to a target moisture content is then preferably wound up in a winding step 111, for example to form a single master bobbin. This master bobbin may be then used to perform the production of smaller bobbins by slitting and small bobbin forming process. The smaller bobbin may then be used for the production of an aerosol-generating article (not shown). Due to the presence of the anti-sticking material, the windings of the bobbin do not stick, or only marginally, one on the others.

The method of production of a slurry for the homogenized tobacco material according to figures 1 or 2 is performed using an apparatus for the production of a slurry 200 depicted schematically in figure 5. The apparatus 200 includes a tobacco receiving station 201, where accumulating, de-stacking, weighing and inspecting the different tobacco types takes place. Optionally, in case the tobacco has been shipped into cartons, in the receiving station 201 removal of cartons containing the tobacco is performed. The tobacco receiving station 201 also optionally comprises a tobacco bale splitting unit.

In fig. 5 only a production line for one type of tobacco is shown, but the same equipment may be present for each tobacco type used in the homogenised tobacco material web according to the invention, depending on when the step of blending is performed. Further the tobacco is introduced

in a shredder 202 for the shredding step 103. Shredder 202 can be for example a pin shredder. The shredder 202 is preferably adapted to handle all sizes of bales, to loosen tobacco strips and shred strips into smaller pieces. The shreds of tobacco in each production line are transported, for example by means of pneumatic transport 203, to a mill 204 for the coarse grinding step 102. Preferably a control is made during the transport so as to reject foreign material in the tobacco shreds. For example, along the pneumatic transport of shredded tobacco, a string removal conveyor system, heavy particle separator and metal detector may be present, all indicated with 205 in the appended drawing.

Mill 204 is adapted to coarse grind the tobacco strips up to a size of between about 0.25 millimetres and about 2 millimetres. The rotor speed of the mill can be controlled and changed on the basis of the tobacco shreds flow rate.

Preferably, a buffer silo 206 for uniform mass flow control, is located after the coarse grinder mill 204. Furthermore, preferably mill 204 is equipped with spark detectors and safety shut down system 207 for safety reasons.

From the mill 204, the tobacco particles are transported, for example by means of a pneumatic transport 208, to a blender 210. Blender 210 preferably includes a silo in which an appropriate valve control system is present. In the blender, all tobacco particles of all the different types of tobacco which have been selected for the predetermined blend are introduced. In the blender 210, the tobacco particles are mixed to a uniform blend. From the blender 210, the blend of tobacco particles is transported to a fine grinding station 211.

Fine grinding station 211 is for example an impact classifying mill with suitable designed ancillary equipment to produce fine tobacco powder to the right specifications, that is, to a tobacco powder between about 0.03

millimetres and about 0.12 millimetres. After the fine grinding station 211, a pneumatic transfer line 212 is adapted to transporting the fine tobacco powder to a buffer powder silo 213 for continuous feed to a downstream slurry batch mixing tank where the slurry preparation process takes place.

The slurry which has been prepared using the tobacco powder above described in steps 106, 107 and 108 of the method of the invention, including the addition of binder, aerosol-former and anti-sticking material, is preferably also cast in a casting station 300 as depicted in fig. 6.

Slurry from a buffer tank (not shown), is transferred by means of suitable pump with precision flow rate control measurement to the casting station 300. Casting station 300 comprises preferably the following sections. A precision slurry casting box and blade assembly 301 where slurry is cast onto a support 303, such as a stainless steel belt with the required uniformity and thickness for proper web formation, receives the slurry from the pump. A main dryer 302, having drying zones or sections is provided to dry the cast tobacco web. Preferably, the individual drying zones have steam heating on the bottom side of the support with heated air above the support and adjustable exhaust air control. Within the main dryer 302 the homogenized tobacco web is dried to desired final moisture on the support 303.

Claims

1. Method for the preparation of a sheet of a material containing alkaloids, said method comprising:
   - providing particles of the material containing alkaloids having a mean size comprised between about 0.03 millimetres and about 0.12 millimetres;
   - combining the particles of the material containing alkaloids with a binder, an aerosol-former and with an inorganic antisticking material to form a slurry; and
   - forming the sheet of the material containing alkaloids from the slurry.
2. Method according to claim 1, wherein the slurry comprises from about 1 percent and about 5 percent in dry weight basis of the binder.
3. Method according to claim 1 or 2, wherein the slurry comprises from about 45 percent to about 93 percent in dry weight basis of the particles of the material containing alkaloids.
4. Method according to any one of the preceding claims, wherein the slurry comprises from about 0.2 percent and about 5 percent in dry weight basis of the antisticking material.
5. Method according to any one of the preceding claims, said method comprising:
   - pulping and refining cellulose fibres to obtain fibres having a mean size comprised between about 0.2 millimetres and about 4 millimetres; and
   - adding the cellulose fibres when forming the slurry.

6. Method according to claim 5, wherein the slurry comprises from about 1 percent to about 7 percent per weight on a dry weight basis of the cellulose fibres.
7. Method according to any one of the preceding claims, wherein the step of forming the sheet of material containing alkaloids from the slurry includes:
    - casting a sheet web of the slurry; and
    - drying the cast sheet web.
8. Method according to any one of the preceding claims, wherein the inorganic antisticking material comprises a silicon based material.
9. Method according to claim 8, wherein the inorganic antisticking material comprises talc powder.
10. Method according to any one of the preceding claims, wherein the antisticking material during the combining step is in powder form, in liquid form or in slurry form.
11. Method according to any one of the preceding claims, wherein the antisticking material is in nano-encapsulated and/or micro-encapsulated form.
12. Method according to any one of the preceding claims, wherein said material containing alkaloids comprises a tobacco material.
13. A homogenized material containing alkaloids comprising:
    - particles of the material containing alkaloids having a mean size comprised between about 0.03 millimetres and about 0.12 millimetres;
    - a binder;
    - an aerosol-former;
    - an inorganic antisticking material; and
    - water.

14. Homogenized material containing alkaloids according to claim 13, comprising from about 1 percent and about 5 percent in dry weight basis of the binder.
15. Homogenized material containing alkaloids according to claim 13 or 14, comprising from about 45 percent and about 93 percent in dry weight basis of the particles of a material containing alkaloids.
16. Homogenized material containing alkaloids according to any one of claims from 13 to 15, comprising from about 0.2 percent and about 5 percent in dry weight basis of the antisticking material.
17. Homogenized material containing alkaloids according to any one of claims from 13 to 16, comprising from about 1 percent to about 7 percent per weight on a dry weight basis of cellulose fibres, the cellulose fibres having a mean length comprised between about 0.2 millimetres and about 4 millimetres.
18. Homogenized material containing alkaloids according to any one of claims from 13 to 17, wherein the inorganic antisticking material comprises a silicon-based material.
19. Homogenized material containing alkaloids according to claim 18, wherein the inorganic antisticking material comprises talc powder.
20. Homogenized material containing alkaloids according to any one of claims from 13 to 19, comprising between about 5 percent and about 30 percent in dry weight basis of an aerosol-former.
21. Homogenized material containing alkaloids according to any one of claims from 13 to 20, wherein said material containing alkaloids is a tobacco material.
22. Aerosol-generating article, comprising a component prepared from the homogenized material containing alkaloids of claims 13 – 21 or from the method of claims 1 – 12.

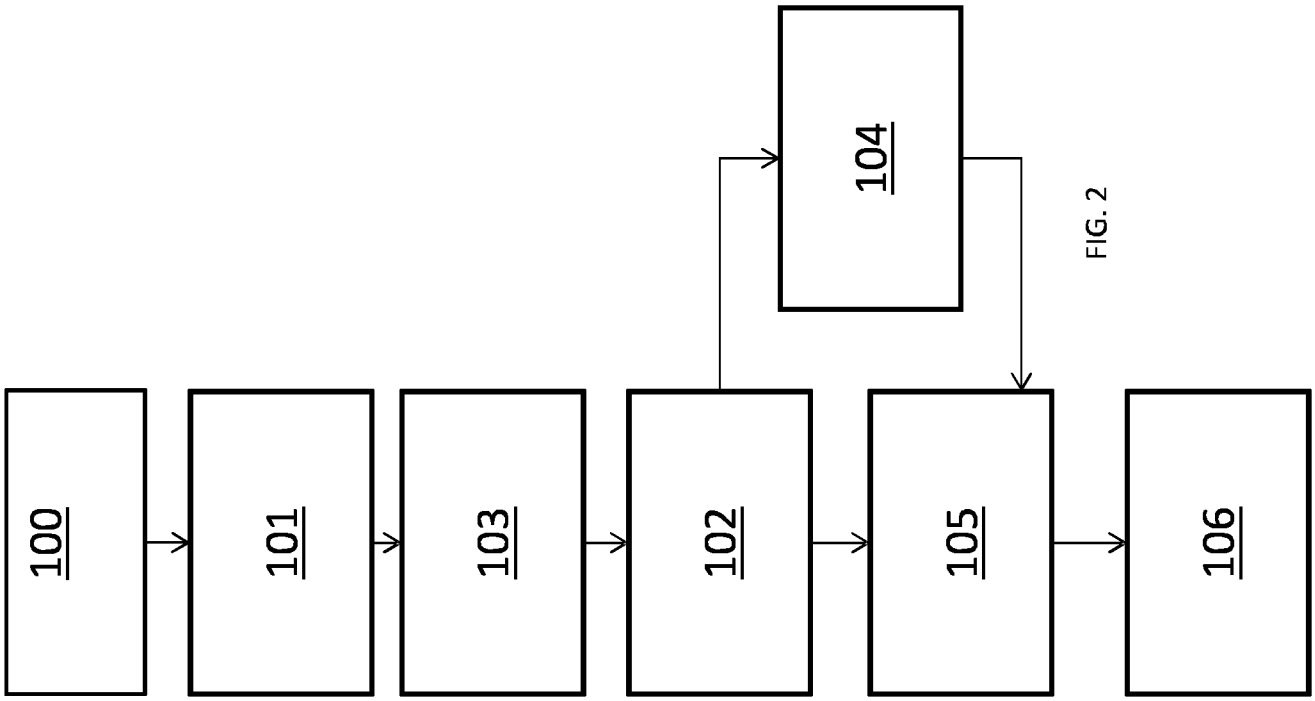

FIG. 2

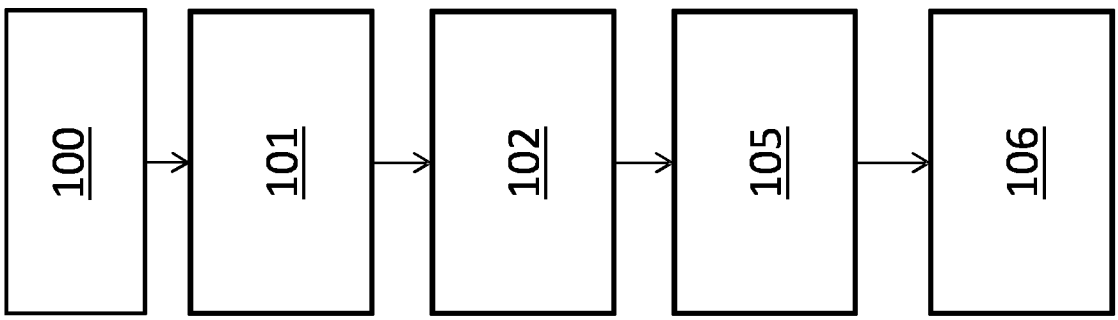

FIG. 1

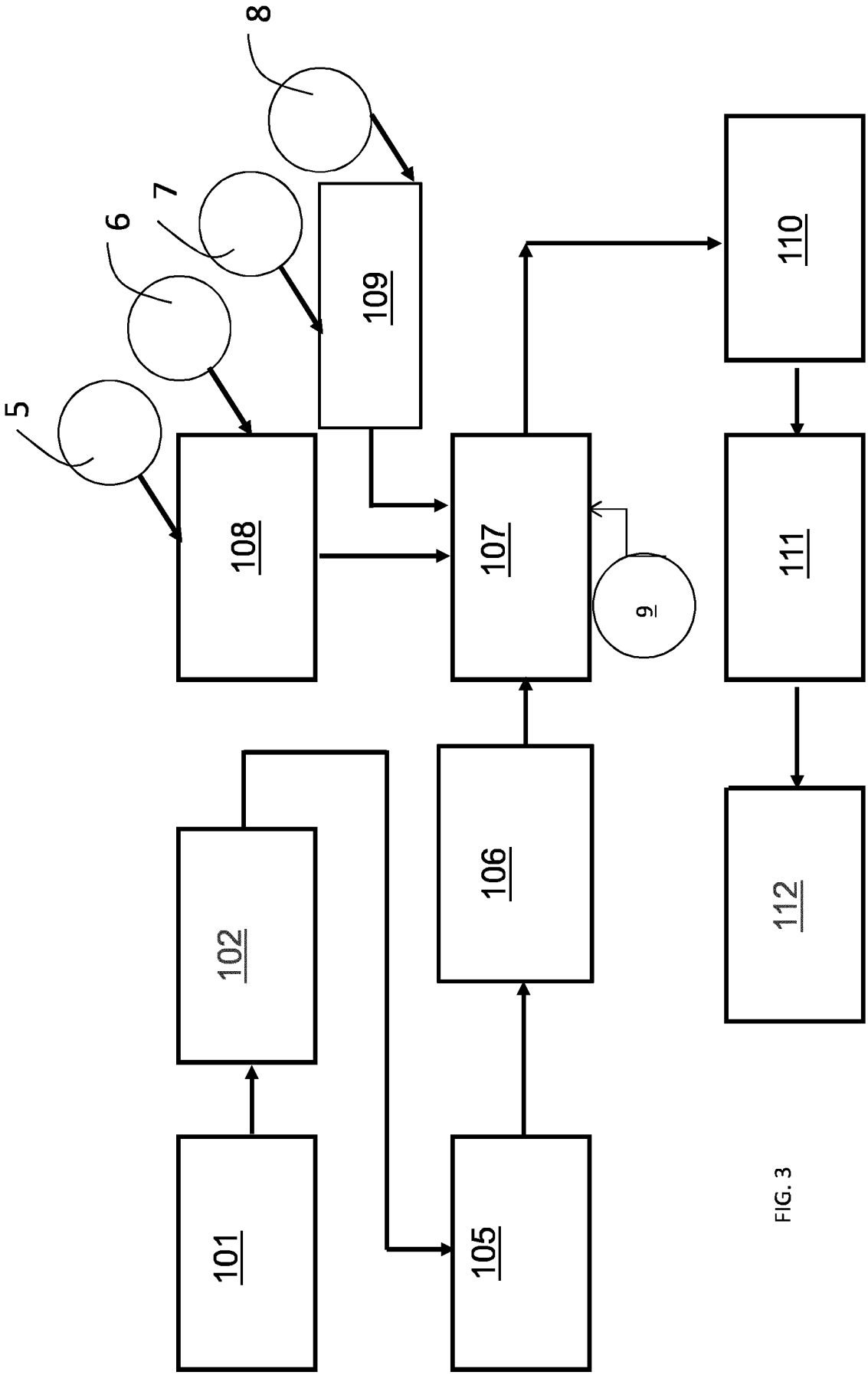

FIG. 3

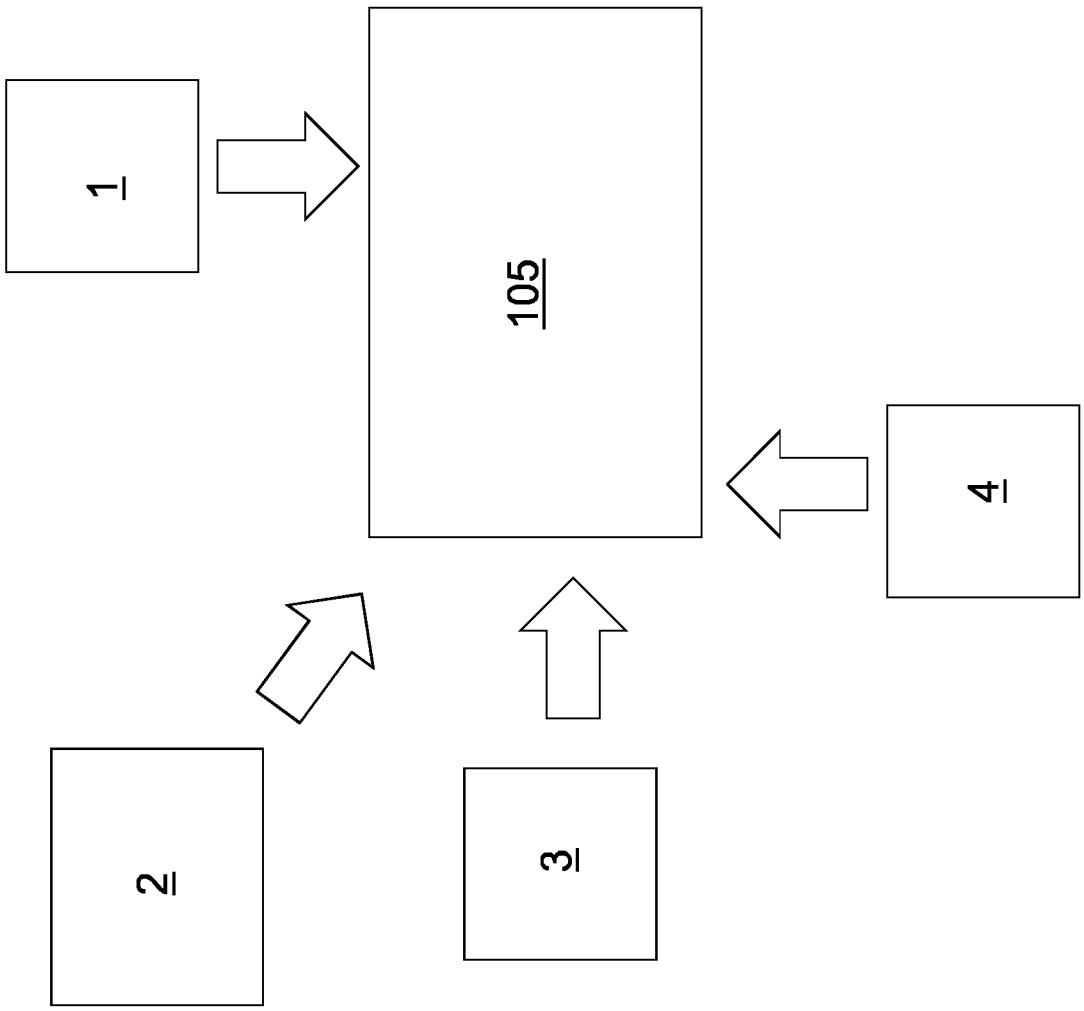

FIG. 4

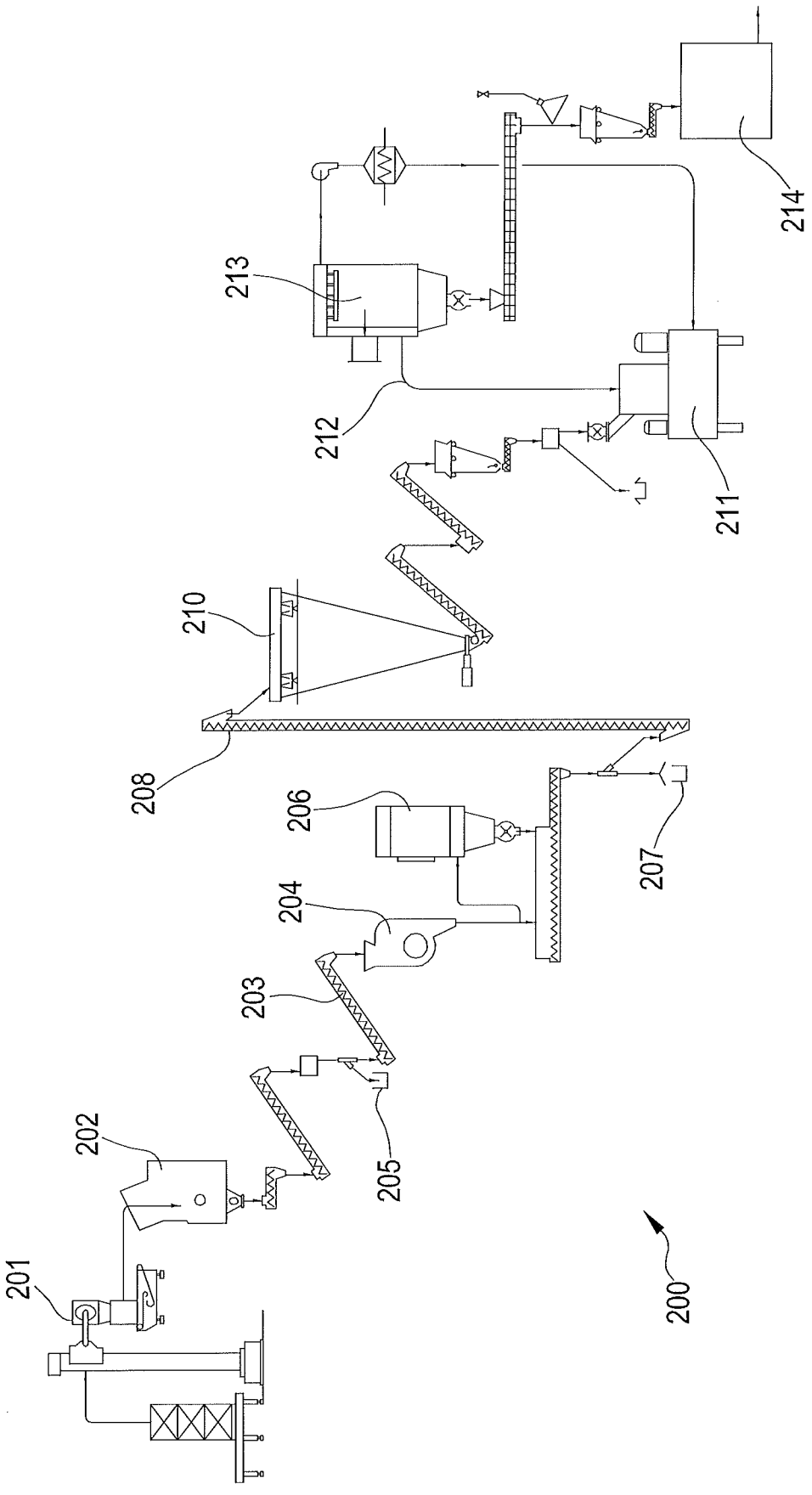

FIG.5

FIG. 6

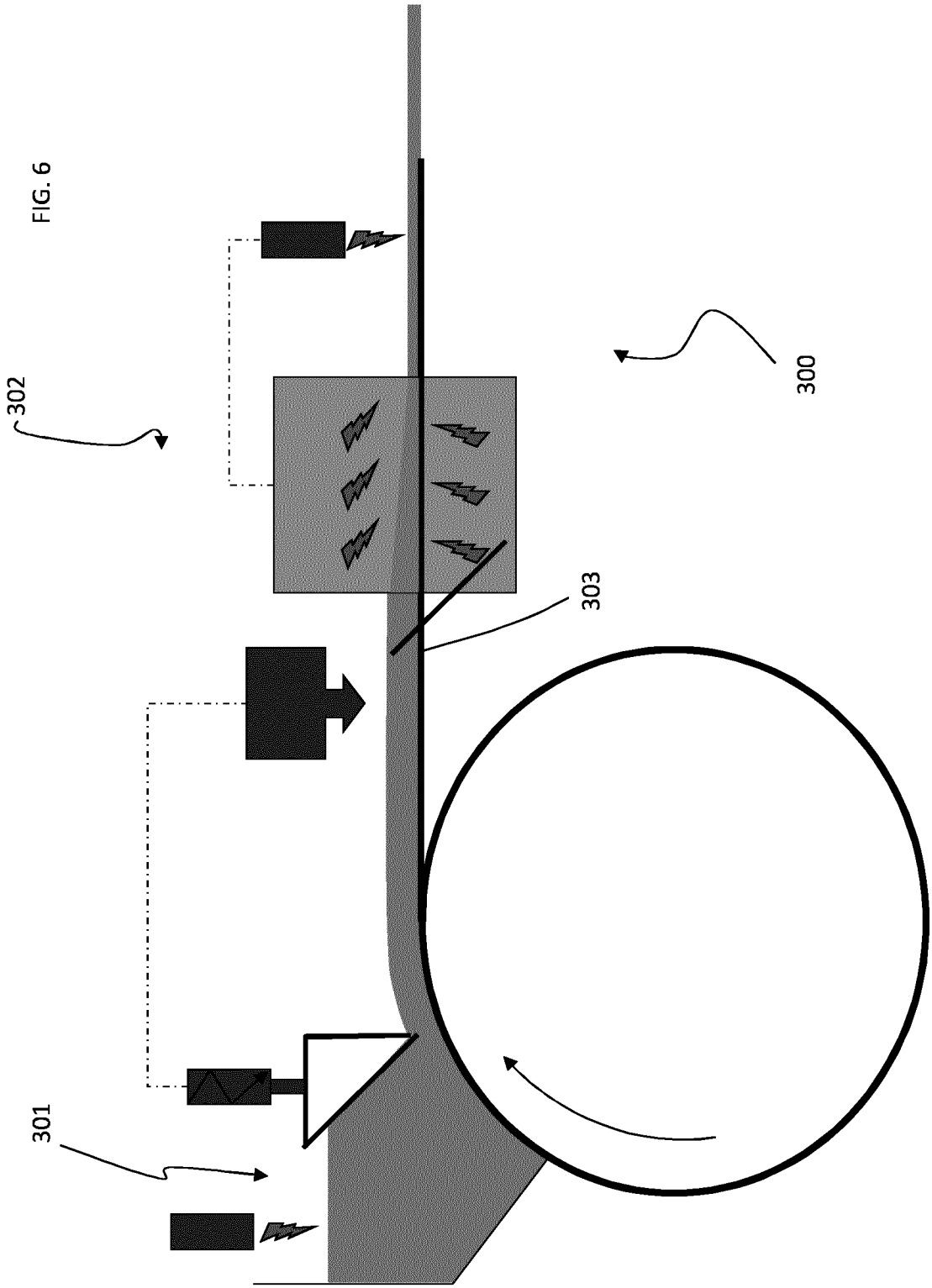

INTERNATIONAL SEARCH REPORT

International application No
PCT/EP2018/079649

A. CLASSIFICATION OF SUBJECT MATTER
INV. A24B15/30 A24B15/14
ADD.

According to International Patent Classification (IPC) or to both national classification and IPC

B. FIELDS SEARCHED

Minimum documentation searched (classification system followed by classification symbols)
A24B

Documentation searched other than minimum documentation to the extent that such documents are included in the fields searched

Electronic data base consulted during the international search (name of data base and, where practicable, search terms used)
EPO-Internal, WPI Data

C. DOCUMENTS CONSIDERED TO BE RELEVANT

Category*	Citation of document, with indication, where appropriate, of the relevant passages	Relevant to claim No.
X	WO 2007/138484 A2 (PHILIP MORRIS PROD [CH]) 6 December 2007 (2007-12-06)	1-4, 7-16, 18-22
Y	page 1, line 14 - line 22; claim 1 page 3, line 26 - line 32 page 5, line 7 - line 11	5,6,17
A	US 2011/139164 A1 (MUA JOHN PAUL [US] ET AL) 16 June 2011 (2011-06-16) paragraph [0025]; examples 9-18; tables 5-8	1-22
A	US 5 584 306 A (BEAUMAN EMORY [US] ET AL) 17 December 1996 (1996-12-17) column 3, line 30 - line 47; claim 26 column 10, line 44 - line 62	1-22

-/--

[X] Further documents are listed in the continuation of Box C.

[X] See patent family annex.

* Special categories of cited documents :

"A" document defining the general state of the art which is not considered to be of particular relevance

"E" earlier application or patent but published on or after the international filing date

"L" document which may throw doubts on priority claim(s) or which is cited to establish the publication date of another citation or other special reason (as specified)

"O" document referring to an oral disclosure, use, exhibition or other means

"P" document published prior to the international filing date but later than the priority date claimed

"T" later document published after the international filing date or priority date and not in conflict with the application but cited to understand the principle or theory underlying the invention

"X" document of particular relevance; the claimed invention cannot be considered novel or cannot be considered to involve an inventive step when the document is taken alone

"Y" document of particular relevance; the claimed invention cannot be considered to involve an inventive step when the document is combined with one or more other such documents, such combination being obvious to a person skilled in the art

"&" document member of the same patent family

Date of the actual completion of the international search	Date of mailing of the international search report
4 February 2019	11/02/2019

Name and mailing address of the ISA/	Authorized officer
European Patent Office, P.B. 5818 Patentlaan 2 NL - 2280 HV Rijswijk Tel. (+31-70) 340-2040, Fax: (+31-70) 340-3016	Villányi Kelemen, K

1

Form PCT/ISA/210 (second sheet) (April 2005)

INTERNATIONAL SEARCH REPORT

International application No
PCT/EP2018/079649

C(Continuation). DOCUMENTS CONSIDERED TO BE RELEVANT

Category*	Citation of document, with indication, where appropriate, of the relevant passages	Relevant to claim No.
A	EP 0 565 360 A2 (PHILIP MORRIS [US]) 13 October 1993 (1993-10-13) page 3, line 5 - line 9; claim 11	1-22
Y	WO 2017/077110 A1 (PHILIP MORRIS PRODUCTS SA [CH]) 11 May 2017 (2017-05-11) page 8, line 27 - line 31 page 6, line 9 - line 18; claim 10 page 7, line 24 - line 33	5,6,17
A	WO 2017/041920 A1 (PHILIP MORRIS PRODUCTS SA [CH]) 16 March 2017 (2017-03-16) claims 1,6,12	5,6,17
A	WO 2017/077112 A1 (PHILIP MORRIS PRODUCTS SA [CH]) 11 May 2017 (2017-05-11) claims 2,3,7	5,6,17

1

INTERNATIONAL SEARCH REPORT

Information on patent family members

International application No
PCT/EP2018/079649

Patent document cited in search report	Publication date	Patent family member(s)	Publication date
WO 2007138484 A2	06-12-2007	AU 2007266713 A1	06-12-2007
		BR PI0711745 A2	06-12-2011
		CA 2653342 A1	06-12-2007
		CO 6140006 A2	19-03-2010
		DK 2031989 T3	13-11-2017
		EA 200870573 A1	30-06-2009
		EP 2031989 A2	11-03-2009
		JP 5248486 B2	31-07-2013
		JP 2009538151 A	05-11-2009
		KR 20090024724 A	09-03-2009
		UA 96760 C2	12-12-2011
		US 2008149121 A1	26-06-2008
		US 2011220135 A1	15-09-2011
		WO 2007138484 A2	06-12-2007
US 2011139164 A1	16-06-2011	NONE	
US 5584306 A	17-12-1996	NONE	
EP 0565360 A2	13-10-1993	AT 193805 T	15-06-2000
		BR 9301513 A	13-10-1993
		CA 2093760 A1	10-10-1993
		CN 1077359 A	20-10-1993
		CZ 9300624 A3	17-11-1993
		DE 69328848 D1	20-07-2000
		DE 69328848 T2	13-06-2001
		EP 0565360 A2	13-10-1993
		ES 2149189 T3	01-11-2000
		GR 3034316 T3	29-12-2000
		JP 3681410 B2	10-08-2005
		JP H0646817 A	22-02-1994
		LT 3195 B	27-03-1995
		LV 10028 A	10-05-1994
		PL 298426 A1	02-11-1993
		PT 565360 E	29-12-2000
		RU 2119761 C1	10-10-1998
		SK 31893 A3	10-11-1993
		US 5724998 A	10-03-1998
WO 2017077110 A1	11-05-2017	AU 2016347736 A1	19-04-2018
		BR 112018007950 A2	30-10-2018
		CA 3000791 A1	11-05-2017
		CN 108135250 A	08-06-2018
		EP 3373751 A1	19-09-2018
		JP 6442110 B2	19-12-2018
		JP 2018533950 A	22-11-2018
		KR 20180073579 A	02-07-2018
		PH 12018500599 A1	24-09-2018
		RU 2672639 C1	16-11-2018
		SG 11201803586Y A	30-05-2018
		US 2018310608 A1	01-11-2018
		WO 2017077110 A1	11-05-2017
WO 2017041920 A1	16-03-2017	AU 2016318385 A1	18-01-2018
		BR 112018002010 A2	18-09-2018
		CA 2989978 A1	16-03-2017
		CN 107949283 A	20-04-2018
		EP 3346854 A1	18-07-2018

INTERNATIONAL SEARCH REPORT

Information on patent family members

International application No
PCT/EP2018/079649

Patent document cited in search report	Publication date	Patent family member(s)	Publication date
		JP 2018531590 A	01-11-2018
		KR 20180050278 A	14-05-2018
		PH 12017502226 A1	11-06-2018
		US 2018242631 A1	30-08-2018
		WO 2017041920 A1	16-03-2017
WO 2017077112 A1	11-05-2017	AU 2016348773 A1	05-04-2018
		BR 112018007028 A2	16-10-2018
		CA 3003093 A1	11-05-2017
		CN 108135249 A	08-06-2018
		EP 3370550 A1	12-09-2018
		JP 6433626 B2	05-12-2018
		JP 2018531019 A	25-10-2018
		KR 20180078232 A	09-07-2018
		PH 12018500479 A1	10-09-2018
		SG 11201802924U A	30-05-2018
		US 2018310609 A1	01-11-2018
		WO 2017077112 A1	11-05-2017