Sept. 29, 1936. M. HURST 2,055,578

FUEL SUPPLY AND REGULATING SYSTEM FOR INTERNAL COMBUSTION ENGINES

Original Filed May 29, 1930

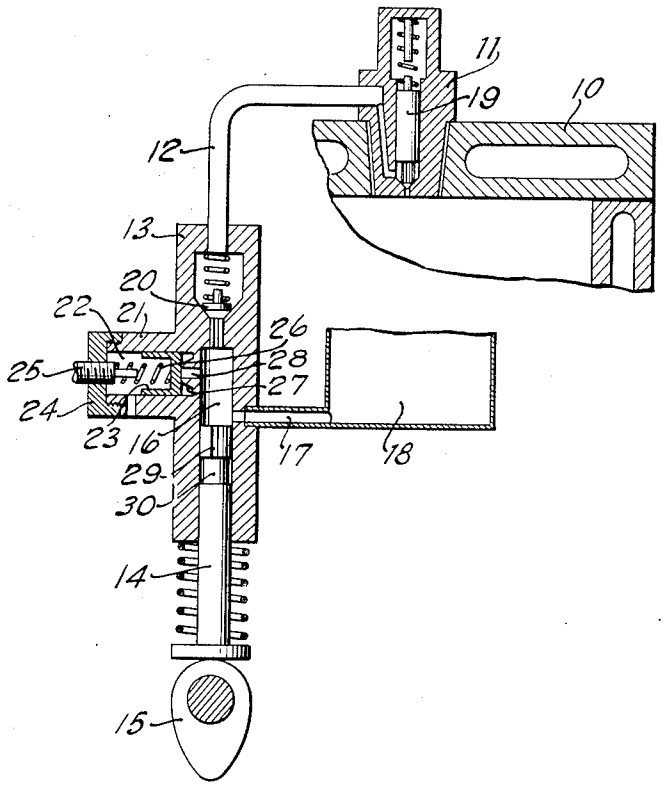

INVENTOR
MAX HURST.
BY Stewart & McKay
his ATTORNEYS

Patented Sept. 29, 1936 2,055,578

UNITED STATES PATENT OFFICE

2,055,578

FUEL SUPPLY AND REGULATING SYSTEM FOR INTERNAL COMBUSTION ENGINES

Max Hurst, Stuttgart, Germany, assignor to Robert Bosch Aktiengesellschaft, Stuttgart, Germany

Original application May 29, 1930, Serial No. 457,288. Patent No. 1,974,851, dated September 25, 1934. Divided and this application July 31, 1934, Serial No. 737,833. In Germany November 23, 1929

2 Claims. (Cl. 123—139)

This invention relates to a fuel supply and regulating system for internal combustion engines, and is particularly applicable for the speed control of internal combustion engines fed by fuel oil on the solid injection or air injection systems.

In internal combustion engines, more particularly engines of the Diesel type fed with fuel oil on the solid injection or air injection systems, it is usual to employ some form of mechanical governor, generally of the centrifugal type, for controlling the quantity of fuel supplied for combustion so that any desired engine speed may be maintained.

A general object of the present invention is to provide an improved arrangement of fuel-supplying means and regulating or controlling means therefor which will operate to maintain the speed of the engine substantially at a predetermined set value by an automatic control of the quantity of fuel delivered by the fuel-supplying means and which does not involve the relatively large number of mechanically co-operating parts and relatively complicated and costly construction of a mechanically operating governor.

A more particular object of the invention is to provide an improved arrangement of the foregoing general character in which the fuel-supplying means is a mechanically operating pump and the regulating or controlling means is one hydraulically operated by the fuel as it is handled by the pump.

According to one form the invention may take, the fuel-feeding and regulating arrangement for automatically controlling a predetermined maximum speed of an internal combustion engine comprises a mechanically operating pump feeding an effective quantity of fuel to the engine cylinders for each working stroke of the engine, with the pump piston of constant stroke and driven by the engine so that the speed of the pump is in direct ratio with the engine speed and therefore with the quantity or volume rate of fuel handled by the pump increasing directly with increase in engine speed, and means comprising a storage chamber and a control connection between that chamber and the pump chamber hydraulically operated by the fuel in the pump chamber whenever the engine speed increases over a predetermined amount to temporarily divert fuel into the storage chamber and away from the discharge duct of the pump.

The present application is a division of applicant's co-pending application Serial No. 457,288, filed May 29, 1930, patent granted September 25, 1934, No. 1,974,851.

The present invention is more particularly described with reference to the accompanying drawing, which shows in longitudinal sectional view, with certain parts broken away, a form of construction embodying the invention. It is to be understood, however, that while this is the best form of the invention now known to me, the invention is not restricted thereto but may be embodied in other forms or modifications of the form shown, within the scope of the appended claims.

In the form of construction shown in the drawing, the fuel feeding and regulating means of the invention are applied to an internal combustion engine of the Diesel type having a cylinder head 10 in which a fuel nozzle 11 is mounted. The fuel is delivered to the nozzle through a pipe 12, and the fuel-feeding means comprises a pump 13 having the pipe 12 as its discharge or delivery duct and a pump piston or plunger 14 driven by a cam 15 timed in accordance with the engine cycle to reciprocate in the pump cylinder 16. The pump plunger is shown at the extremity of its outward or suction stroke, so that the pump cylinder is open to receive a charge of fuel through the suction or inlet-supply pipe 17 from the supply chamber 18. The fuel drawn into the pump cylinder is then forced, on the upward or working stroke of the pump plunger, through the spring-loaded non-return valve 20 into the delivery pipe 12 and through that pipe to the fuel injection nozzle 11 in the cylinder head of the engine, the spring-loaded needle valve 19 of the fuel-injection nozzle being arranged to open the nozzle orifice at a given pressure so that the fuel is sprayed into the engine cylinder.

In addition to the pump chamber 16 with the pump plunger 14 reciprocating therein, the pump body is provided with a lateral arm 21 having a relatively large axial bore 22 within which is slidably fitted a cup-shaped piston 23, the bored arm being provided with a removable end-closure wall 24 mounting the adjusting screw 25 for the spring 26 which extends between the inner reduced stem end of the screw and the rear or inner base portion of the cup-shaped piston.

The relatively large bore in the arm 21 terminates forwardly in a stop ring 27 which determines the extent of forward movement of the piston 23 under the pressure of the spring 26, and through the center of the stop ring a relatively small bore 28 connects the large bore of the arm in front of the piston 23 with the pump chamber 16. By this arrangement, a variable-capacity fuel storage chamber is formed with the

piston 23 not only functioning as a movable end wall of that chamber but also as a valve member controlling the connection between that chamber and the pump chamber. A portion of the fuel is discharged into the storage chamber by the pump and temporarily stored therein as will more fully appear from the description hereinafter given of the mode of operation of the device.

In addition to the variable-capacity fuel storage chamber just described, the arrangement for controlling the quantity or volume rate of fuel delivered by the pump to the engine preferably comprises means placing the pump chamber in communication with a pressure-relief passage toward the end of the working or pressure stroke of the pump plunger. In its preferred form, that means comprises an annular groove 30 in the cylindrical wall of the pump plunger adjacent its forward end and a longitudinal channel 29 extending from the forward end or front face of the pump plunger to the annular groove, the groove being so arranged as to register with the fuel suction pipe 17 as the pump plunger nears the end of and completes its working stroke.

The mode of operation of the described and illustrated pump and control arrangement is as follows:

During the working or pressure strokes of the pump the pressure in the pump chamber increases more quickly and to a greater extent than the engine speed increases because the time allowed for the discharge of the fuel through the loaded valve 20 and through the injection nozzle is reduced. The loading of the piston 23 which is variable by means of the screw 25 may be so adjusted that the piston 23 is retained in its initial position until any predetermined pressure is attained in the pump chamber and, therefore, until any given speed of rotation of the engine is attained. If the engine speed rises above this limit then the piston 23, due to the increase in hydraulic pressure against it of the liquid fuel in the pump chamber, recedes from its stop-ring 27 during the pressure stroke of the pump plunger and receives or stores in the space thus made available a portion of the fuel discharged by the pump plunger.

Towards the end of its pressure stroke the pump plunger places the pump chamber in communication with the suction pipe through the channel 29 and annular groove 30. The piston 23, under the pressure of the spring 26, can now force the fuel taken up or stored during the previous part of the pressure stroke back into the suction pipe through the channel 29 and groove 30, so that the piston 23 is again in its position of rest shown in the drawing for the beginning of the next pressure stroke of the pump. If the speed of the engine is increased due to a reduction in the load thereon so that the pressure in the pump chamber is increased, then the quantity of fuel delivered to the engine will be correspondingly decreased to that required for maintaining the normal engine speed.

In order to reduce as far as possible any irregularity or hunting in the automatic adjustment described above, provision should be made for obtaining adequate displacement of the piston 23 when the given maximum hydraulic pressure is reached. For this purpose the stop 27 of the piston 23 is so formed, of frusto-conical shape with the small end facing the front face of the piston 23 as shown in the drawing, that the effective piston surface is enlarged as soon as the piston is displaced from its stop.

What is claimed is:

1. An arrangement for automatically controlling a predetermined maximum speed of an internal combustion engine in which the effective quantity of fuel fed to the engine cylinders for each working stroke is supplied by a pump driven in direct ratio to the speed of the engine, said arrangement comprising the combination, with said engine and pump, said pump having a clearance space in its compression chamber, of a fuel delivery duct leading from said pump to said engine and fuel-pressure-operated valves controlling the flow of fuel from said pump into said duct and from said duct into said engine, a temporary fuel storage chamber, a piston therein, a duct connecting said storage chamber with said clearance space of the pump chamber, said piston normally closing said duct and being displaceable by the pump pressure to open said duct and admit fuel to said storage chamber whenever the speed of the engine increases over said predetermined speed and the pump pressure correspondingly increases, means returning said piston to normal position closing said duct and discharging fuel from said storage chamber to said pump chamber when the pressure drops therein below the pressure displacing said piston, a pressure-relief passage leading from the pump chamber and means maintaining said passage closed until approximately the end of the working stroke of said pump and then opening said passage.

2. A fuel supply and regulating system for an internal combustion engine of the oil-injection type comprising the combination, with such an engine having a fuel-injection nozzle provided with a fuel-delivery valve having a loading tending to close said valve and operated in opening direction by the pressure of fuel against it, of a fuel-injection pump positively driven by said engine and having its discharge side connected with said nozzle on the supply side of said valve whereby during the pressure strokes of said pump the fuel pressure in the pump chamber tends to increase in greater proportion than increase in engine speed due to the effect of increase in engine speed in reducing the time allowed for discharge of fuel through said nozzle valve into the engine cylinder on each compression stroke of said engine, and means automatically operating to limit the maximum pressure in said pump chamber and thereby to limit to a substantially constant value the maximum volume rate of fuel delivery from said pump through said nozzle valve to said engine, said means comprising a temporary storage chamber for fuel directly connected to the pressure chamber of said pump separately from the connection of said pump with said fuel-injection nozzle, and means associated with said storage chamber normally closing the same from said pump chamber and automatically operating to open the same for the reception of fuel from said pump chamber on the compression stroke when the pump pressure rises above a given amount and to discharge the received fuel back into the pressure chamber of said pump when the pressure therein drops below said given amount.

MAX HURST.