J. F. MONNOT.

PROCESS OF CASTING METAL INGOTS.

APPLICATION FILED SEPT. 6, 1907. RENEWED DEC. 17, 1908.

929,688. Patented Aug. 3, 1909.

Fig. 1.

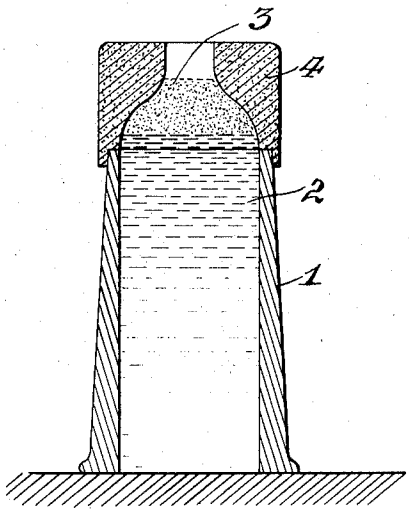

Fig. 2.

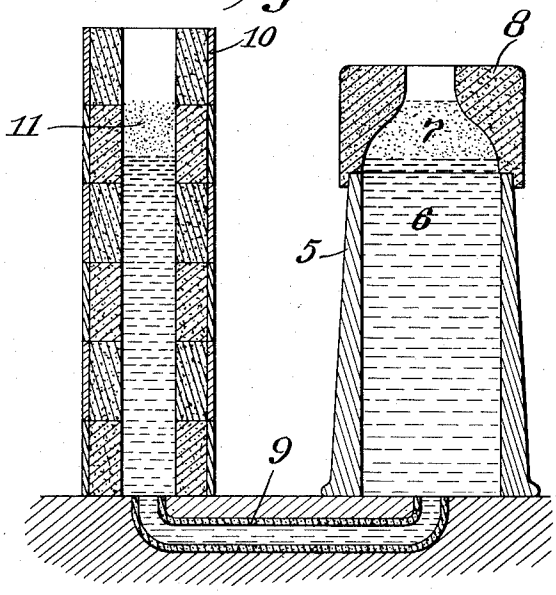

Fig. 3.

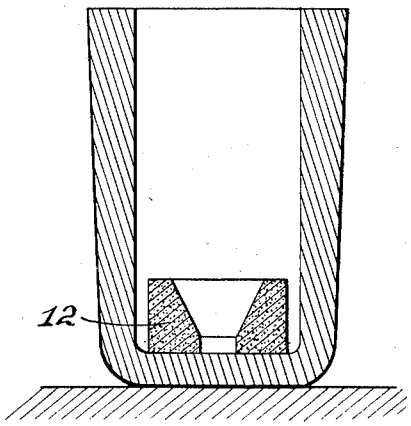

Fig. 4.

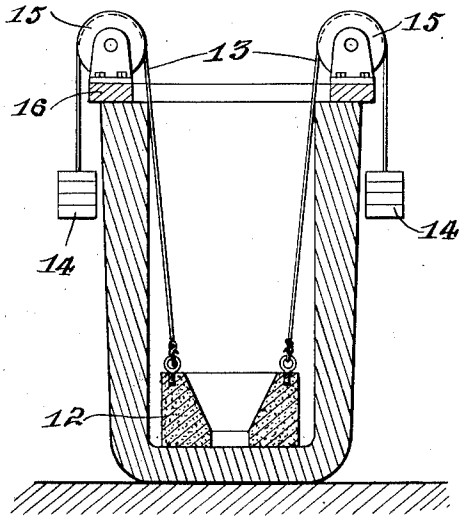

Attest:

E. S. Mitchell

J. C. Sands

Inventor:

John Ferreol Monnot

by

Marble, McElroy & Matty Attys

UNITED STATES PATENT OFFICE.

JOHN FERREOL MONNOT, OF NEW YORK, N. Y., ASSIGNOR TO MONNOT METALLURGICAL COMPANY, OF NEW YORK, N. Y., A CORPORATION OF NEW YORK.

PROCESS OF CASTING METAL INGOTS.

No. 929,688. Specification of Letters Patent. Patented Aug. 3, 1909.

Application filed September 6, 1907, Serial No. 391,674. Renewed December 17, 1908. Serial No. 468,055.

To all whom it may concern:

Be it known that I, JOHN FERREOL MONNOT, a citizen of the United States, and a resident of the city, county, and State of New York, have invented certain new and useful Improvements in Processes of Casting Metal Ingots; and I hereby declare the following to be a full, clear, and exact description thereof, such as will enable others skilled in the art to which the invention pertains to make and practice the same.

This invention relates to the art of casting metals and consists in a method of casting molten metal into molds in the presence of a wiping liquid; all as more fully hereinafter set forth and as claimed.

As has been known for many years, all common objects exposed to atmospheric conditions are covered with a relatively dense adhering layer of condensed vaporizable matter; this layer being probably partly moisture and partly condensed gases. Glass and solid metals, as well as most other materials, after exposure to air have a condensed adhering layer of moisture and gases which they refuse to part with, even at relatively elevated temperatures. Glass surfaces, for instance, refuse to part with all their moisture even at 500° C. though losing it at still higher temperatures, and they cannot be absolutely dried even by contact with air dried with powerful chemical hygroscopic agents. With this moisture occur gases also; glass, for instance, also retaining much absorbed carbon dioxid as well as, probably, other atmospheric gases. The connection or relation of these condensed bodies, gas and moisture, to each other is unknown; their practically invariable occurrence on all mineral matters, metals and vitreous substances is a matter of fact.

In the ordinary methods of casting molten metals into molds, the interior of the mold is always covered with the described layer and in the art, beyond perhaps some warming of the mold, no efforts are customarily made to obviate its presence. This layer under the influence of the great heat of the molten metal is vaporized after some little time; generally after a body of metal has accumulated above it, and in its expansion and in its accumulation in forcing its way upward through the solidifying metal it forms the familiar pit holes on the surfaces of the bodies of cast metal. The mold walls being generally colder than the molten metal do not release the condensed vaporizable matter until after such metal begins to become thick or pasty as a rule, metals being ordinarily cast at a temperature not much above their melting points.

The molten metal in pouring through the air into the mold also accumulates more or less of a similar superficial layer, though by reason of the high temperature of such metal this layer is not usually very great in amount. But it carries with it entrained air; frequently in considerable amounts with careless casting. Entrained air is also of course responsible for blowholes and porous metal.

It is the purpose of the present invention to do away with the described phenomena and make metal castings under conditions which will enable the molten metal to come in contact with mold walls free of vaporizable matter and which will prevent accumulation of gases and vapors, whether entrained or absorbed, to form pitholes, blebs, blowholes and unsound castings. To this end, the metal to be cast is poured into the mold through a body of a non-metallic wiping liquid contained in the mold. This liquid should be of such nature as to readily "wet" the molten metal flowing through it. Sodium silicate, or ordinary commercial water-glass, forms a suitable wiping liquid for this purpose, since it is readily fused at the temperature of most molten metals to form a comparatively viscous liquid which wets metals, coming into actual contact with their surfaces, and which is well adapted to wipe off clinging layers of condensed gases and the like, while entrained air will of course not descend through it. Being lighter than the metal, the metal descends through it, so that a comparatively small amount of such wiping fluid will suffice for a comparatively large ingot.

The metal passing through the layer of wiping liquid appears at its base in a chemically clean form, so far as the presence of air or moisture is concerned, and the several particles or drops have a clean metallic surface, enabling them to unite to form a homogenous flawless body of metal. And if the wiping liquid be contained in the mold, it steadily rises upward as the molten metal accumulates in the base of the mold, wiping before it as it goes any condensed or "ab-

sorbed" layer of vaporizable material on the mold walls and enabling the metal to take the exact form of the mold walls without formation of bubbles, blebs, pitholes or flaws. No entrained air will go through the wiping liquid with the poured metal. Advantageously, the wiping liquid is contained for the most part in a receptacle separate from the mold proper in order to obtain a maximum depth of such wiping liquid with a minimum amount of material.

In the accompanying illustration I have shown, more or less diagrammatically, sundry types of apparatus of the many adapted to perform the described process and falling within the limits of my invention.

In this illustration, Figure 1 shows in vertical cross-section an ordinary type of mold provided with a special non-conductive crown piece; Fig. 2 shows a vertical section of a similar mold and of a portion of a pouring table and runner arranged to pour the mold from the bottom. Fig. 3 shows a vertical section of a mold and of a floatable retainer for wiping fluid therein; and Fig. 4 is a view similar to Fig. 3, illustrating the counterbalancing of such retainer to assist same in rising.

In Fig. 1, 1 designates the mold body; 2 an ingot of metal contained therein; 3 a layer of wiping fluid floating on the metal; and 4 is a non-conductive crown piece or head.

In Fig. 2, 5 is an ingot mold; 6 a body of metal therein; 7 a floating layer of wiping fluid and 8 a non-conductive head. The mold is filled upwardly from conduit 9 by pouring molten metal into the runner 10 in communication with said conduit, according to the method common in making steel ingots. Whether the mold be poured from the top, as in Fig. 1, or from the bottom, as in Fig. 2, the first portion of the molten metal entering the mold melts the wiping material, if the latter has been placed in the mold in a solid condition; and the molten wiping material covers the surface of the molten metal, protecting the same from oxidation, and also as it rises wiping the sides of the mold free from the absorbed layer of moisture and gases above mentioned—which said wiping material is able to do because of its high temperature, the result of contact with the molten metal.

When carrying on the process as illustrated in Fig. 1, the molten metal is caused to pass through the floating layer of wiping material 3, and is thereby wiped clean of entrained air and gases. When carrying on the process as illustrated in Fig. 2, the same result is accomplished by maintaining in the runner 10, as well as in the mold, a layer of wiping material, designated in the runner of Fig. 2 by reference numeral 11. As the molten metal nears the top of the mold, the wiping material is lifted up into the bore of the crown-piece or head, 4 or 8; and commonly so much molten metal is run into the mold that said molten metal rises up into such crown-piece a greater or less distance, also. This crown-piece being of refractory non-conductive material, and the upper surface of the metal being protected to great extent against radiation to the outside air by the coating of wiping material, 3 or 7, now of considerable depth owing to the upwardly-tapering form of the bore of the crown piece, the metal in such bore solidifies relatively slowly, as compared with the metal in the mold itself, and thus such metal in the bore of the crown piece forms a reservoir from which molten metal is drawn automatically to fill the "pipe" commonly formed in the central portion of an ingot by contraction of the metal from the inside outward as the metal solidifies and cools; and in this way the formation of such pipe is avoided, the resulting ingot being dense and substantially homogeneous throughout. The portion of the ingot solidifying in the crown piece will customarily be the only, or practically the only, portion of the ingot to be "cropped off", if, indeed, any cropping whatever is required; and owing to the efficient protection against surface oxidation and absorption of gases afforded by the "wiping material" and the consequent freedom of the metal from contained oxid (which usually makes the upper portion of an ingot bad when the ingot is cast without protection by a layer of wiping material) cropping will often not be required at all. My invention therefore makes available for working a much greater portion of the ingot than has been available heretofore.

Heretofore, in casting steel ingots, it has been considered substantially necessary to fill the molds from the bottom, as in Fig. 2, to avoid, so far as possible, oxidation of the main body of the metal and to keep the bulk of the oxid formed near the top of the ingot, and to give as much opportunity as possible for the escape of entrained air and gases; but according to the methods of pouring commonly used heretofore it has not been possible to avoid contact of air with the stream of molten metal flowing into the riser, and thus a considerable quantity of oxid has been formed and carried into and mixed with the main body of molten metal, distributing oxid to some extent throughout the ingot. The wiping layer used in my process wipes the stream of molten metal clear of such oxid. For this reason there is not so much reason in my process for pouring molds from the bottom (as in Fig. 2) and in general it will be permissible to pour them from the top, as in Fig. 1.

The wiping material may be contained within a floatable ring 12 (Fig. 3) located

within the mold; said ring having a central space, open at the bottom, for containing such wiping material; there being also some space between the outer surface of such ring and the inner surface of the mold. In such case, the stream of molten metal is poured into the mold through ring 12; and while the major portion of the wiping material will remain in said ring, a certain proportion of it will be carried mechanically by the molten metal beneath the ring to the outside thereof and will flow up into the annular space between the ring and the side of the mold, thereby covering the metal in such annular space, and wiping the sides of the mold as above described. This ring 12 may be made of crucible mixture, carborundum, or other suitable refractory material.

If desired, the ring may be counterweighted, as shown in Fig. 4, being connected by flexible cables 13 to counterweights 14, said cables passing over pulleys 15 carried by a ring 16 resting removably on top of the mold, and adapted to be moved from mold to mold as the pouring goes on.

Other fusible materials may be used as the wiping material; for example, potassium silicate, a mixture of potassium and sodium silicate, glass, or neutralized borax, or in general and readily fusible mineral substance which will not unite or mix with the molten metal.

What I claim is:—

1. In the art of casting metals, the process of making homogeneous ingots which consists in casting molten metal into an ingot mold down through a wiping layer of a fused inorganic body.

2. In the art of casting metals, the process of making homogeneous ingots which consists in casting molten metal into an ingot mold through a confined wiping layer of a fused inorganic body.

3. In the art of casting metals, the process of making homogeneous steel ingots which consists in casting molten steel into an ingot mold down through a wiping layer of a fused inorganic body.

4. In the art of casting metals, the process of making homogeneous steel ingots which consists in casting molten steel into an ingot mold through a confined wiping layer of a fused inorganic body.

5. In the art of casting metals, the process of making homogeneous ingots which consists in casting molten metal into an ingot mold down through a wiping layer of fused alkali silicate.

6. In the art of casting metals, the process of making homogeneous ingots which consists in casting molten metal into an ingot mold through a confined wiping layer of fused alkali silicate.

7. In the art of casting metals, the process of making homogeneous steel ingots which consists in casting molten steel into an ingot mold down through a wiping layer of a fused alkali silicate.

8. In the art of casting metals, the process of making homogeneous steel ingots which consists in casting molten steel into an ingot mold through a confined wiping layer of a fused alkali silicate.

9. In the art of casting metals, the process of making homogeneous ingots which consists in providing a suitable ingot mold internally with a floatable container holding a fusible mineral body and having an open bottom, and casting molten metal into said mold through said container and through the fusible mineral matter therein contained.

10. In the art of casting metals, the process of making homogeneous steel ingots which consists in providing a suitable ingot mold internally with a floatable container holding a fusible mineral body and having an open bottom, and casting molten steel into said mold through said container and through the fusible mineral matter therein contained.

11. In the art of casting metals, the process of making homogeneous ingots which consists in providing a suitable ingot mold internally with a floatable container holding alkali silicate and having an open bottom, and casting molten metal into said mold through said container and through the alkali silicate therein contained.

12. In the art of casting metals, the process of making homogeneous steel ingots which consists in providing a suitable ingot mold internally with a floatable container holding alkali silicate and having an open bottom, and casting molten steel into said mold through said container and the alkali silicate therein contained.

In testimony whereof I affix my signature, in the presence of two witnesses.

JOHN FERREOL MONNOT.

Witnesses:

H. M. MARBLE,

K. P. MCELROY.