(12) INTERNATIONAL APPLICATION PUBLISHED UNDER THE PATENT COOPERATION TREATY (PCT)

(19) World Intellectual Property Organization
International Bureau

(43) International Publication Date
16 November 2006 (16.11.2006)

PCT

(10) International Publication Number
WO 2006/121406 A1

(51) International Patent Classification:
B66C 23/66 (2006.01) *B66C 23/42* (2006.01)
B66C 23/687 (2006.01) *B66C 23/68* (2006.01)
B60P 1/54 (2006.01) *B66C 3/20* (2006.01)
B66C 1/68 (2006.01)

(21) International Application Number:
PCT/SE2006/050116

(22) International Filing Date: 11 May 2006 (11.05.2006)

(25) Filing Language: Swedish

(26) Publication Language: English

(30) Priority Data:
0501095-4 13 May 2005 (13.05.2005) SE

(71) Applicant and
(72) Inventor: **HAMMARSTRAND, Ove** [SE/SE]; Fiskebyvägen 14, S-824 51 Hudiksvall (SE).

(74) Agents: **LINDBLOM, Erik, J.** et al.; Groth & Co KB Box 6107, S-102 32 Stockholm (SE).

(81) Designated States *(unless otherwise indicated, for every kind of national protection available)*: AE, AG, AL, AM, AT, AU, AZ, BA, BB, BG, BR, BW, BY, BZ, CA, CH, CN, CO, CR, CU, CZ, DE, DK, DM, DZ, EC, EE, EG, ES, FI, GB, GD, GE, GH, GM, HR, HU, ID, IL, IN, IS, JP, KE, KG, KM, KN, KP, KR, KZ, LC, LK, LR, LS, LT, LU, LV, LY, MA, MD, MG, MK, MN, MW, MX, MZ, NA, NG, NI, NO, NZ, OM, PG, PH, PL, PT, RO, RU, SC, SD, SE, SG, SK, SL, SM, SY, TJ, TM, TN, TR, TT, TZ, UA, UG, US, UZ, VC, VN, YU, ZA, ZM, ZW.

(84) Designated States *(unless otherwise indicated, for every kind of regional protection available)*: ARIPO (BW, GH, GM, KE, LS, MW, MZ, NA, SD, SL, SZ, TZ, UG, ZM, ZW), Eurasian (AM, AZ, BY, KG, KZ, MD, RU, TJ, TM), European (AT, BE, BG, CH, CY, CZ, DE, DK, EE, ES, FI, FR, GB, GR, HU, IE, IS, IT, LT, LU, LV, MC, NL, PL, PT, RO, SE, SI, SK, TR), OAPI (BF, BJ, CF, CG, CI, CM, GA, GN, GQ, GW, ML, MR, NE, SN, TD, TG).

Declaration under Rule 4.17:
— *of inventorship (Rule 4.17(iv))*

Published:
— *with international search report*
— *before the expiration of the time limit for amending the claims and to be republished in the event of receipt of amendments*

For two-letter codes and other abbreviations, refer to the "Guidance Notes on Codes and Abbreviations" appearing at the beginning of each regular issue of the PCT Gazette.

(54) **Title:** AN ARRANGEMENT RELATING TO THE ARM OF A CRANE

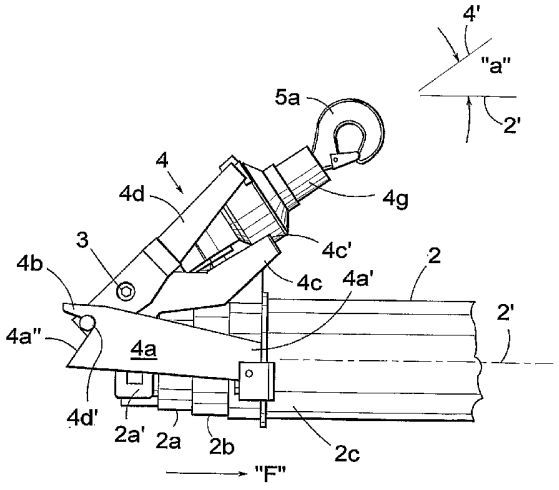

(57) **Abstract:** The present invention pertains to a crane-arm-related arrangement (1), wherein the crane arm (2) includes a plurality of telescopically co-ordinated arm sections (2a, 2b, 2c) and wherein an outermost part (2a') of an innermost arm section (2a) co-acts with a pivotally mounted unit (4), through the medium of a pivot axle (3), wherein the unit (4) is adapted so as to be able to take a lockable first position adjacent the crane arm, a parking position, wherein said first position is intended to define a selected acute angle ("a") between a centre line (2') of the crane arm (2) and a longitudinal extension (4') of said unit (4), and a freely hanging second position, a working position, via said pivot axle (3), wherein said unit (4) has a first fastener means (5a), which can be fastened to or released from a load-related second fastener (5b). The arm sections (2a, 2b and 2c) are subjected to an arm- section collapsing relative movement (F), which is adapted to allow a unit latching device (4a) to be moved towards and into a unit-locking position.

WO 2006/121406 A1

TITLE OF THE INVENTION: AN ARRANGEMENT RELATING TO THE ARM OF A CRANE

FIELD OF INVENTION

The present invention pertains generally to an arrangement relating to an arm of a crane, and more particularly, but not exclusively, to such a crane arm arrangement in which the actual crane arm construction is mounted on a load carrying vehicle, primarily a truck.

More particularly, the crane arm construction is fitted or attached to a chassis of a truck, immediately behind and sideways of the driver's cabin, and related to a free space situated between a platform of the truck and the driver's cabin.

Crane arm constructions of the kind concerned here include a rotatably mounted vertical post and a number of arms co-ordinated with the upper part of the post, wherewith said arms are mutually rotatably co-ordinated and can be rotated relative to one another about one or more horizontal rotational axles of associated piston-cylinder-devices or arrangements.

The outmost arm of the associated arms will normally include a plurality of telescopically co-ordinated arm sections, such as three arm sections, where the outer free part of the innermost arm section is intended to co-act with a pivotally mounted unit. via a horizontal pivot axle.

This pivotally mounted unit is also adapted to take an inwardly collapsed and locked first position in relation to the crane arm, a so-called transporting or parking position, where said position is adapted so as to define an acute angle between a centre line

of the crane arm and a longitudinal extension of said unit, and a second position in which the unit hangs freely down, via the rotational shaft, to a so-called working position.

The pivotal unit may also include or present a first fastener means (shown as a hook in the illustrated embodiment), which can be fastened to or released from a load-related second fastener means, not shown.

BACKGROUND OF THE INVENTION

Several different embodiments of methods, arrangements and constructions related to the above technical field and to its nature are known to the art.

By way of a first example of the background of the technology and the technical field to which the invention relates can be mentioned a crane-arm-related construction in which a crane arm includes a plurality of telescopically co-ordinated arm sections where the outermost portion of an innermost arm section is intended to co-act with a pivotally mounted unit, via a related pivot axle, wherein the unit is adapted to enable it to take a first outwardly locked collapsed state relative to the crane arm, i.e. a parking position, wherein said first position is intended to define a chosen acute angle between a centre line of the crane arm and a longitudinal extension of said unit, and a second position, in which the unit hangs freely from the pivot axle, and wherein said unit has a first fastener means, which can be fastened to or released from a load-related second fastener means.

In respect of these arrangements it has been found technically challenging to be able to swing said unit from any working position to a parking position, and vice versa, when the remainder of the crane arm construction may take a fully collapsed state. The pivotal unit shall be rotated to a position located above the free end of the crane arm when in or immediately prior to a collapsed state, in order to obtain a space or room within the parking position.

This rotational movement has earlier been implemented with the aid of a separate actuable piston-cylinder-device or arrangement.

SUMMARY OF THE INVENTION

Technical problem

When taking into consideration the technical deliberations that a person skilled in this particular art must make in order to provide a solution to one or more technical problems that he/she encounters, it will be seen that it is necessary initially the realize, on the one hand, the measures and/or the sequence of measures that must be undertaken to this end, and to realize, on the other hand, which means is/are required in solving one or more of said problems. On this basis, it will be evident that the technical problems listed below are highly relevant to the development of this invention.

When considering the earlier standpoint of techniques in respect of a crane arm construction and a crane-arm arrangement related thereto wherewith a crane arm includes a plurality of telescopically co-ordinated arm sections and wherewith the outermost part of an innermost arm section co-acts with a pivotally mounted unit through the medium of a pivot axle, and wherewith the unit is adapted so as to enable it to take a first collapsed and locked position against the crane arm, in a parking position, and wherewith said first position is intended to define a selected acute angle between a crane-arm centre line and a longitudinal extension of said unit, and a second position, a working position, in which it hangs freely via the pivot axle and wherewith said unit includes a first fastener means intended to be fastened to or released from a load-related second fastener means, it will be seen that a technical problem resides in the ability to realize the significance of, the benefits obtained by and/or the technical measures and deliberations that will be required in respect of a crane-arm construction and a crane-arm arrangement related thereto in which a crane arm comprises a plurality of telescopically co-ordinated arm sections and wherewith the outer part of an innermost arm section co-acts with a pivotally mounted unit via a pivot axle, wherewith said unit is intended to take a first inwardly collapsed and locked position against the crane arm, in a parking position, and where said first position is intended to define a selected acute angle between a crane arm centre line and a longitudinal extension of said unit, and a second position, a working position, in which the unit hangs freely via the rotational shaft, and wherewith said unit includes a first fastener means for fastening to or release from a load-related second fastener means, in creating conditions which enable said unit to be rotated from a working

position to a parking position and vice versa without needing or requiring the presence of a separately driven piston-cylinder-device or arrangement to this end.

A technical problem also resides in the ability to realize the significance of, the advantages that are benefited by and/or the technical measures and deliberations that will be required in allowing the relative collapsing movement of the arm sections to be adapted to allow a unit-associated latching means to be displaced towards and up to the unit to a position in which the unit is locked in said parking position, or to allow relative expanding movement of the arm sections to be adapted to allow latching means associated with said unit to be displaced from and out of the unit in said parking-mode locking positions.

A technical problem also resides in the ability to realize the significance of, the advantages that are benefited by and/or the technical measures and deliberations that will be required in allowing said unit to include a work tool, such as a rotator unit, coupled to said first fastener means.

A technical problem also resides in the ability to realize the significance of, the advantages that are benefited by and/or the technical measures and deliberations that will be required to allow said latching means to have the form of an elongated arm related to the unit and orientated parallel with, or essentially parallel with, and offset to said centre line.

Another technical problem resides in the ability to realize the significance of, the advantages that are benefited by and/or the technical measures and deliberations that will be required in allowing one end of said arm to be secured to an outer arm section which surrounds the innermost arm section and which has at its other end a finger-shaped unit-locking projection.

Another technical problem resides in the ability to realize the significance of, the advantages that are benefited by and/or the technical measures and deliberations that will be required in allowing the unit support to be adapted for co-action with said work tool or said rotator unit in said parking position.

Another technical problem resides in the ability to realize the significance of, the advantages that are benefited by and/or the technical measures and deliberations that will be required in allowing said support to be fixed in relation to the outer part of said innermost arm section.

Another technical problem also resides in the ability to realize the significance of, the benefits that are afforded by and/or the technical measures and deliberations that will be required in allowing an arm arrangement belonging to said unit to be rotatably mounted about said pivot axle, and to include a drive device, such as a shoulder, adapted for co-action with the unit-locking projection in said parking position.

Another technical problem resides in the ability to realize the significance of, the advantages that are benefited by and/or the technical measures and deliberations that will be required in allowing the arm arrangement to include said device or shoulder in a position adjacent to and within a first end portion and, in addition, to include a centre-related pivot axle and a work tool or rotator-unit supporting part, such as a second end part.

Another technical problem resides in the ability to realize the significance of, the benefits that are afforded by and/or the technical measures and deliberations that will be required in allowing the arm arrangement to be given a "U"-shape with the legs of said "U"-shape forming said first end-part.

Another technical problem resides in the ability to realize the significance of, the benefits that are afforded by and/or the technical measures and deliberations that will be required in allowing said support to be given a "U"-shape with the legs of said "U"-shape supporting said pivot axle.

SOLUTION

The present invention takes its starting point from the known technology described in the introduction with respect to a crane-arm-related arrangement, where the crane arm includes a plurality of telescopically co-ordinated arm sections and where the outer part of an innermost arm section is intended to co-act with a pivotally mounted unit via a pivot axle, wherein said unit is adapted to enable it to take a first collapsed

lockable position against the crane arm, i.e. a parking position, and wherein said first position is adapted to define a chosen acute angle between a crane-arm centre line and a longitudinal extension of said unit and to take a freely hanging second position, a working position, via said pivot axle, and wherein said unit includes a first fastener means, adapted to be fastened to or released from a load related second fastener means.

With the intention of solving one or more of the aforesaid technical problems, it is particularly proposed, in accordance with the invention, that the known technology is supplemented by allowing a relative collapsing movement of the arm sections to be such as to permit a unit-latching means to be displaced towards and up to the unit in said parking locking mode, or vice versa.

By way of proposed embodiments that are included in the scope of the inventive concept, it is proposed that said unit shall include a work tool, such as a rotator unit, coupled to the first fastener means.

The latching means will conveniently have the form of an elongatde arm associated with the pivotal unit and orientated parallel with said centre line although offset laterally from said line.

The elongated arm is fastened at one end to an outer arm part which surrounds the innermost arm part, and the other end of which elongated arm has a finger-like projection that locks the pivotal unit.

According to the invention, a fixed unit support shall be adapted to co-act with the work tool or rotator unit in said parking mode.

This support will preferably be fixed relative to the outer part of the innermost arm section.

More particularly, it is proposed that the unit belonging to the arm arrangement shall be pivotal about said axle and that the arm arrangement includes a drive means in

the form of a shoulder adapted for co-action with said projection in said parking mode.

It is also proposed that the drive means or shoulder provided in the arm arrangement shall be orientated adjacent to and within a first end part, and that the arm arrangement shall, in other respects, include a centre-related pivot axle and a rotator-unit support element as a second end part.

The arm arrangement has a particularly pronounced "U"-shape, with the legs of said "U"-shape forming said first end part.

It is also proposed that the support will conveniently have a "U"-shape, with the legs of the support carrying said pivot shaft.

ADVANTAGES

Those advantages that can be considered primarily characteristic of the present invention and the particular significant characteristics thereof reside in the provision of conditions which enable said unit to be rotated from a working position to a parking position, or vice versa, solely by activating a small relative movement between adjacent arm sections, wherewith this relative movement forces the unit to pivot.

.....

The primary characteristic features of the present invention are set forth in the characterising clause of the accompanying claim 1.

.....

BRIEF DESCRIPTION OF THE INVENTION

A proposed embodiment having the significant characteristic features of the present invention will now be described by way of example with reference to the accompanying drawings, in which;

Figure 1 is a perspective view of the free end of a horizontally orientated crane arrangement in a fully collapsed state with a unit, structured in accordance with the directives of the invention hanging, shown vertically in a working mode;

Figure 2 is a perspective view of a free end of an obliquely downwards directed crane arrangement in a non-fully collapsed position, with a unit structured in accordance with the directives of the invention shown before the unit can be swung to a parking mode;

Figure 3 is a side view of the free end of a horizontally orientated crane arrangement in a fully collapsed state with a unit structured in accordance with the directives of the invention in a upper parking mode; and

Figure 4 is another perspective view of the crane arrangement according to figure 2.

DETAILED DESCRIPTION OF THE INVENTION

It is pointed out initially that we have chosen to use in the following description of an embodiment at present preferred and that includes significant characteristic features of the present invention as illustrated in the figures of the accompanying drawings, special terms and terminology with the primary intention of illustrating the inventive concept more clearly.

However, it will be noted that the expressions chosen here shall not be limited solely to the chosen terms used in the description but that each term shall be interpreted as also including all technical equivalents that function in the same or at least essentially in the same way so as to achieve the same or at least essentially the same purpose and/or technical effect.

The accompanying figures 1 to 4 inclusive thus illustrate schematically and in detail the fundamental prerequisites of the present invention where the significant features of the present invention have been concretized in the following description of an exemplifying embodiment at present preferred.

Thus, figures 1 and 2 illustrate an arrangement 1 related to a crane arm 2 which includes a plurality of telescopically co-ordinated arm sections 2a, 2b and 2c, where

the outermost part 2a′ of an innermost arm section co-acts with a pivotally mounted unit 4 through the agency of a pivot axle 3.

As shown in figure 3, the arm section 2c is adapted to be able to collapse into a first position and to be locked in said position, a parking mode, wherein said first position is intended to define an acute angle "a" between a centre line 2′ of the crane arm 2 and a longitudinal extension 4′ of the unit, such as an angle of between 30 and 60 degrees. In the case of the illustrated embodiment, this angle has a value of 45 degrees.

The unit 4 is also adapted to be able to take a freely hanging second position, a working position, through the agency of the pivot axle 3 (as shown in figures 1 and 2), said unit 4 having a first fastener means 5a, in the illustrated case a load supporting hook, which can be fastened to and released from a load-related second fastener means (5b) (not shown).

This mutually collapsing relative movement of the arm sections (2a, 2b, 2c) from the position shown in figure 2 to the position shown in figure 3 is intended to allow the latching means 4a of the pivotal unit 4 to be moved towards and into a position in which the unit 4 is locked in the parking position, according to figure 3.

The unit 4 also includes a working implement, in the illustrated case a rotator unit 4g whose bottom part is connected to the first fastener means 5a and its upper is connected to the pivot axles 3 via a rotator link. The rotator link 4h includes the pivot axles 3, 3a.

The latching means 4a has the form of an elongate arm belonging to the unit 4 and orientated parallel with, or essentially parallel with, the centre line 2′ and offset to one side of the centre line 2′.

One end 4a′ of the arm 4a is fastened to an outer arm section 2d (or the arm section 2c) that surrounds the innermost arm section 2a, and the other end 4a" of which has a finger-like projection that locks the pivotal unit 4.

The unit 4 includes a support 4c that has a supportive surface 4c´ which is intended to co-act with the rotator unit 4g in the above mentioned parking position, as shown in figure 3.

The support 4c is fixedly related to the outer part 2a´ of the innermost arm section 2a, by means of a bolt joint.

An arm arrangement 4d belonging to the unit 4 is mounted for rotation around the pivot axle 3, wherein the arm arrangement includes a driver in the form of a shoulder 4d´, intended for co-action with the projection 4b in said parking position.

The shoulder 4d´ related to the arm arrangement is situated adjacent to and within a first end part 4e and also includes a centre-related pivot axle 3 and a second end-part 4f, which is adapted to form a supporting part 4f´ for the rotator unit 4g.

The arm arrangement 4d has a "U"-configuration, with the legs of the "U"-shape forming said first end part 4e.

The support 4c has a "U"-configuration or legs, with the legs of the "U"-shape carrying the pivot axle 3.

Rotation of the unit 4, from the position shown in figure 2 to the position shown in figure 3, takes place in the following manner.

The innermost arm section 2a shall initially take a slightly projected (not shown) position, so that the shoulder 4d´ will be completely free from the arm 4a.

By bringing the arm sections 2a and 2b (2c, 2d) together from said initial position, in a direction indicated by an arrow "F", to the position shown in figure 2, the shoulder 4d´ will be caused to co-act with the finger 4b, while a further collapsing of the arm sections 2a and 2b will cause the arm arrangement 4d to swing or rotate about the pivot axle 3, therewith causing the rotator unit 4g to accompanying this rotational movement in a direction towards the support 4c and its support surface 4c´, whereafter the

arm construction is able to swing or rotate the unit 4 and said arm sections 2a, 2b and 2c to the parked or parking position shown in figure 3.

Separation of the arm sections 2a and 2b (an outward projection of the arm section 2a) provides a counter directional movement pattern, in which the unit 4 is moved from its parked position, according to figure 3, to one or more freely-hanging working positions, according to figures 1 and 2.

It will be understood that the present invention is not restricted to the illustrated exemplifying embodiments and that modifications can be made within the scope of the inventive concept, illustrated in the accompanying claims.

It will be noted that each illustrated component and/or circuit can be combined with each other illustrated component and/or circuit within the concept of the invention for achieving the desired technical function.

CLAIMS

1. A crane arm related arrangement (1) wherein the crane arm (2) includes a plurality of telescopically co-ordinated arm sections (2a, 2b, 2c) and wherein an outermost part (2a´) of an innermost arm section (2a) co-acts with a pivotally mounted unit (4) through the medium of a pivot axle (3),wherein the unit (4) is adapted so as to be able to take a lockable first position adjacent the crane arm, a parking position, wherein said first position is intended to define a selected acute angle ("a") between a centre line (2´) of the crane arm (2) and a longitudinal extension (4´) of said unit (4), and a freely hanging second position, a working position, via said pivot axle (3), wherein said unit (4) has a first fastener means (5a), which can be fastened to or released from a load-related second fastener (5b), **characterized in**, that the arm sections (2a, 2b and 2c) are subjected to an arm-section collapsing relative movement, which is adapted to allow a unit latching device (4a) to be moved towards and into a unit locking parking position.

2. An arrangement according to claim 1, **characterized in,** that said unit (4) includes a work tool, such as a rotator unit (4g), connected to said first fastener means (5a).

3. An arrangement according to claim 1 or 2, **characterized in**, that the latching means (4a) has the form of an elongated arm on the unit (4), wherein the arm is orientated parallel with, or essentially parallel with, said centre line (2´) and laterally offset thereto.

4. An arrangement according to claim 3, **characterized in,** that the arm (4a) is fastened at one end (4a´) to an outermosrt part (2d) that surrounds the innermost arm section (2a), while the other end (4a´´) of said arm (4a) includes a finger-like unit locking projection.

5. An arrangement according to claim 1 or 2, **characterized in,** that the supporting element (4c), associated with the unit (4), is adapted to co-act with said rotator unit (4g) in said parking position.

6. An arrangement according to claim 5, **characterized in,** that said support (4c) is fixedly related to the outer part (2a´) of the innermost arm section (2a).

7. An arrangement according to claim 1 or 4, **characterized in,** that the arm arrangement (4d), belonging to the unit, is arranged for pivotal rotation about said pivot axle (3), wherein the arm arrangement (4d) includes a driver, such as a shoulder (4d´), intended for co-action with said finger or projection in said parking position.

8. An arrangement according to claim 7, **characterized in,** that the arm arrangement (4d) includes the driver (4d´), which is located adjacent to and within a first end part (4e), a midway-related pivot axle (3) and a second part (4f´), such as a second end-part (4f), which is intended to support the working tool, such as the rotator unit (4g).

9. An arrangement according to claim 7 or 8, **characterized in,** that the arm arrangement (4d) has a "U"-shaped configuration with the legs of said "U"-shape forming said first end-part (4e).

10. An arrangement according to claim 5, **characterized in,** that the support (4c) has a "U"-shaped configuration with the legs of the "U"-shape supported by and co-ordinated with said pivot axle (3).

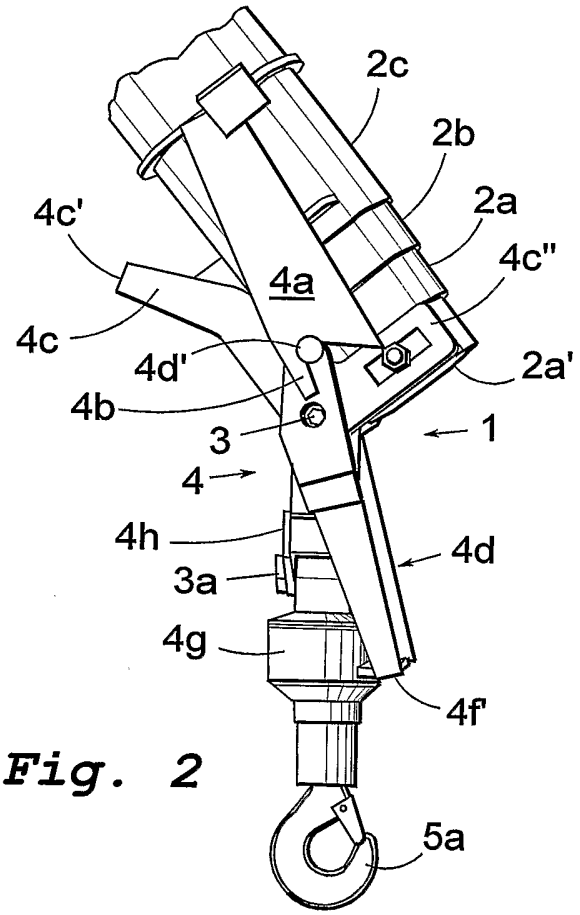

Fig. 2

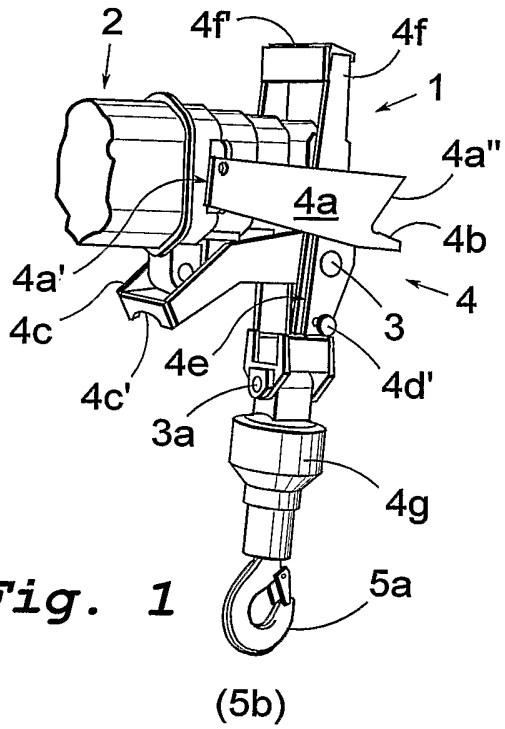

Fig. 1

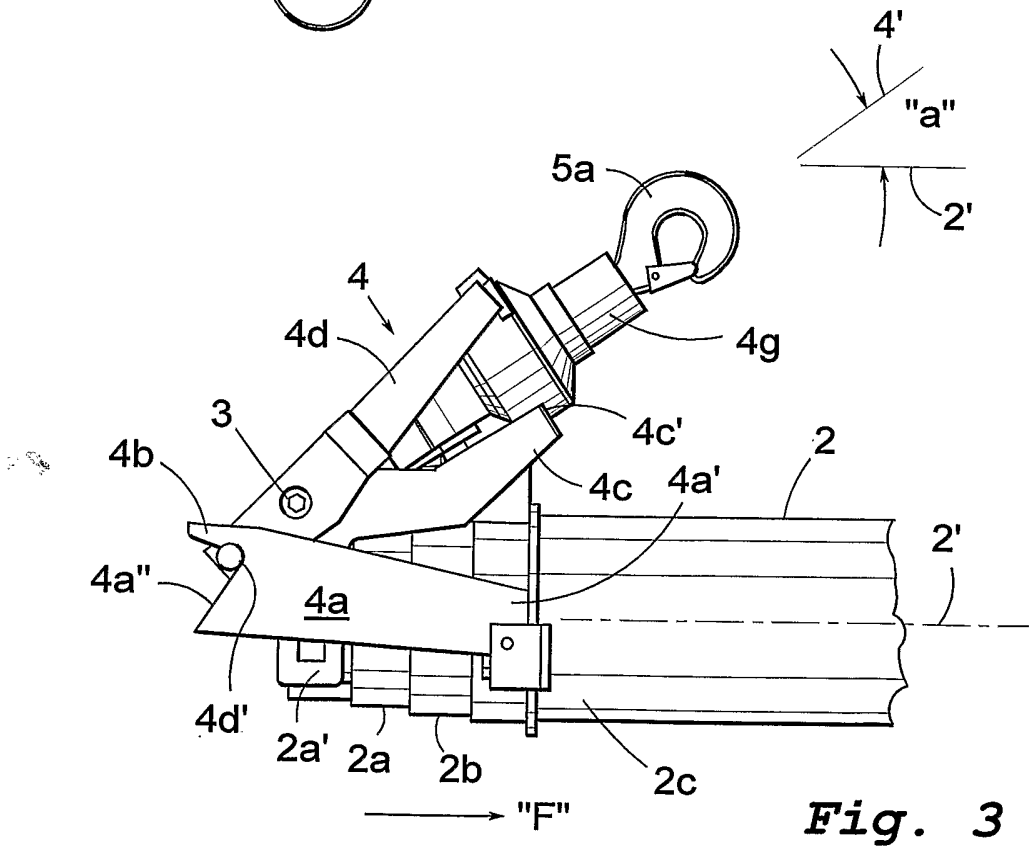

Fig. 3

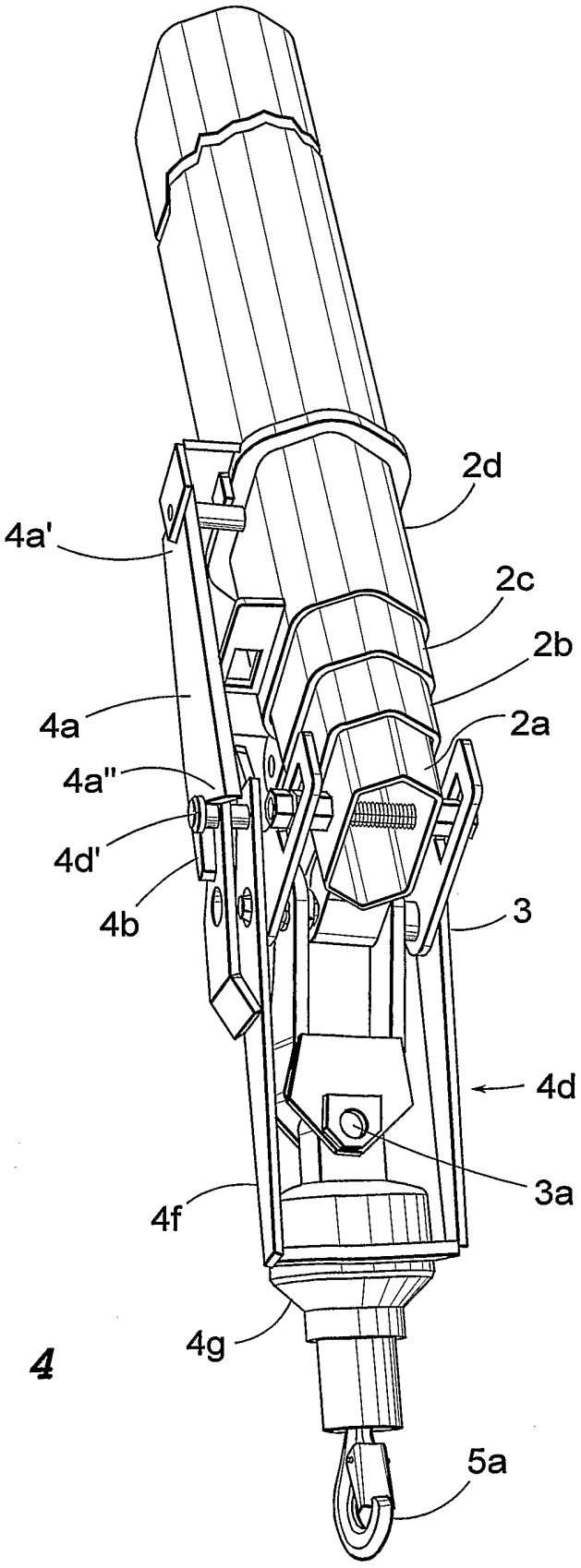

Fig. 4

INTERNATIONAL SEARCH REPORT

International application No.
PCT/SE2006/050116

A. CLASSIFICATION OF SUBJECT MATTER

IPC: see extra sheet
According to International Patent Classification (IPC) or to both national classification and IPC

B. FIELDS SEARCHED

Minimum documentation searched (classification system followed by classification symbols)

IPC: B66C, B60P, E02F

Documentation searched other than minimum documentation to the extent that such documents are included in the fields searched

SE,DK,FI,NO classes as above

Electronic data base consulted during the international search (name of data base and, where practicable, search terms used)

EPO-INTERNAL, WPI DATA, PAJ

C. DOCUMENTS CONSIDERED TO BE RELEVANT

Category*	Citation of document, with indication, where appropriate, of the relevant passages	Relevant to claim No.
X	File EPODOC/EPO, TADANO TEKKOSHO KK et al: "Truck Crane Equipped with Hoisted Load Monitoring Camera" JP7048088 A, 19950221 figures 1-4, abstract --	1-10
A	File EPODOC/EPO, HIKOMA SEISAKUSHO KK: "Control Method for Crane Storage", JP2209396 A, 19900820 figures 1-10, abstract --	1
A	File EPODOC/EPO, KOBELCO CONSTR MACHINERY LTD et al: " Crawler Crane", JP2002226176 A, 20020814 figures 1-6, abstract --	1

[X] Further documents are listed in the continuation of Box C. [ ] See patent family annex.

* Special categories of cited documents:
"A" document defining the general state of the art which is not considered to be of particular relevance
"E" earlier application or patent but published on or after the international filing date
"L" document which may throw doubts on priority claim(s) or which is cited to establish the publication date of another citation or other special reason (as specified)
"O" document referring to an oral disclosure, use, exhibition or other means
"P" document published prior to the international filing date but later than the priority date claimed
"T" later document published after the international filing date or priority date and not in conflict with the application but cited to understand the principle or theory underlying the invention
"X" document of particular relevance: the claimed invention cannot be considered novel or cannot be considered to involve an inventive step when the document is taken alone
"Y" document of particular relevance: the claimed invention cannot be considered to involve an inventive step when the document is combined with one or more other such documents, such combination being obvious to a person skilled in the art
"&" document member of the same patent family

Date of the actual completion of the international search	Date of mailing of the international search report
31 August 2006	06 -09- 2006
Name and mailing address of the ISA/ Swedish Patent Office Box 5055, S-102 42 STOCKHOLM Facsimile No. +46 8 666 02 86	Authorized officer Mariana Eddin/EK Telephone No. +46 8 782 25 00

Form PCT/ISA/210 (second sheet) (April 2005)

INTERNATIONAL SEARCH REPORT

International application No.
PCT/SE2006/050116

C (Continuation). DOCUMENTS CONSIDERED TO BE RELEVANT

Category*	Citation of document, with indication, where appropriate, of the relevant passages	Relevant to claim No.
A	File EPODOC/EPO, TADANO LTD et al: "Auxiliary Sheave Device for Crane", JP7215675 A, 19950815 figure, abstract -- --------	1

International patent classification (IPC)
B66C 23/66 (2006.01)
B66C 23/687 (2006.01)
B60P 1/54 (2006.01)
B66C 1/68 (2006.01)
B66C 23/42 (2006.01)
B66C 23/68 (2006.01)
B66C 3/20 (2006.01)

Download your patent documents at www.prv.se
The cited patent documents can be downloaded at www.prv.se by following the links:

- In English/Searches and advisory services/Cited documents (service in English) or
- e-tjänster/anförda dokument(service in Swedish).

Use the application number as username.
The password is **OJTQMYKOFS**.

Paper copies can be ordered at a cost of 50 SEK per copy from PRV InterPat (telephone number 08-782 28 85).

Cited literature, if any, will be enclosed in paper form.