US 20150075186A1

(19) **United States**

(12) **Patent Application Publication**

PRAJAPATI

(10) **Pub. No.: US 2015/0075186 A1**

(43) **Pub. Date: Mar. 19, 2015**

(54) **METHOD OF AND AN APPARATUS FOR MAINTAINING CONSTANT PHONE SKIN TEMPERATURE WITH A THERMOELECTRIC COOLER AND INCREASING ALLOWABLE POWER/PERFORMANCE LIMIT FOR DIE IN A MOBILE SEGMENT**

(71) Applicant: **QUALCOMM Incorporated**, San Diego, CA (US)

(72) Inventor: **Rupal Govindbhai PRAJAPATI**, San Diego, CA (US)

(73) Assignee: **QUALCOMM Incorporated**, San Diego, CA (US)

(21) Appl. No.: **14/030,901**

(22) Filed: **Sep. 18, 2013**

Publication Classification

(51) **Int. Cl.**
F25B 21/02 (2006.01)

(52) **U.S. Cl.**
CPC ***F25B 21/02*** (2013.01)
USPC **62/3.7**

(57) **ABSTRACT**

A method, an apparatus, and a computer program product for wireless communication are provided. The apparatus determines whether a skin temperature at a skin portion of a mobile device is greater than a threshold temperature. The apparatus provides power to a thermoelectric cooler (TEC) to cool a first side of the TEC while heating a second side of the TEC if the skin temperature is greater than the threshold temperature, wherein the first side of the TEC contacts the skin portion to cool the skin portion and the second side of the TEC faces a core of the mobile device.

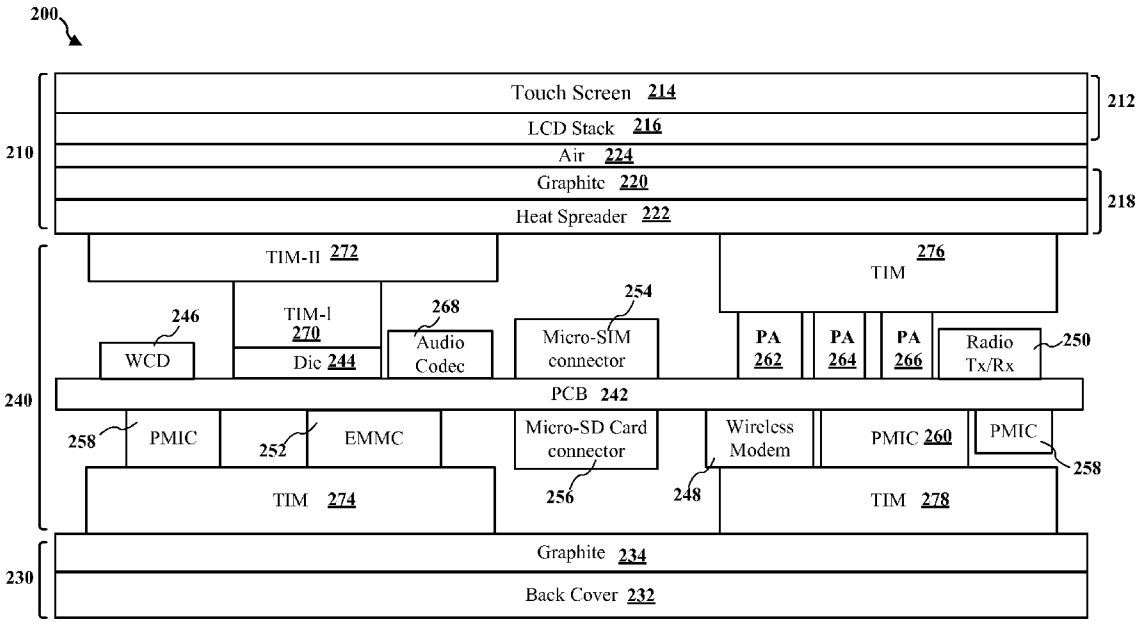

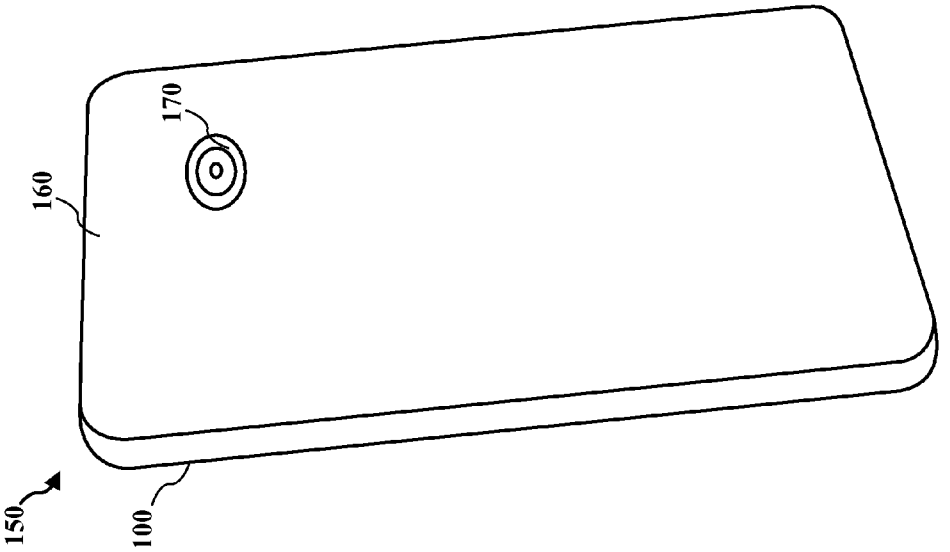

FIG. 1B

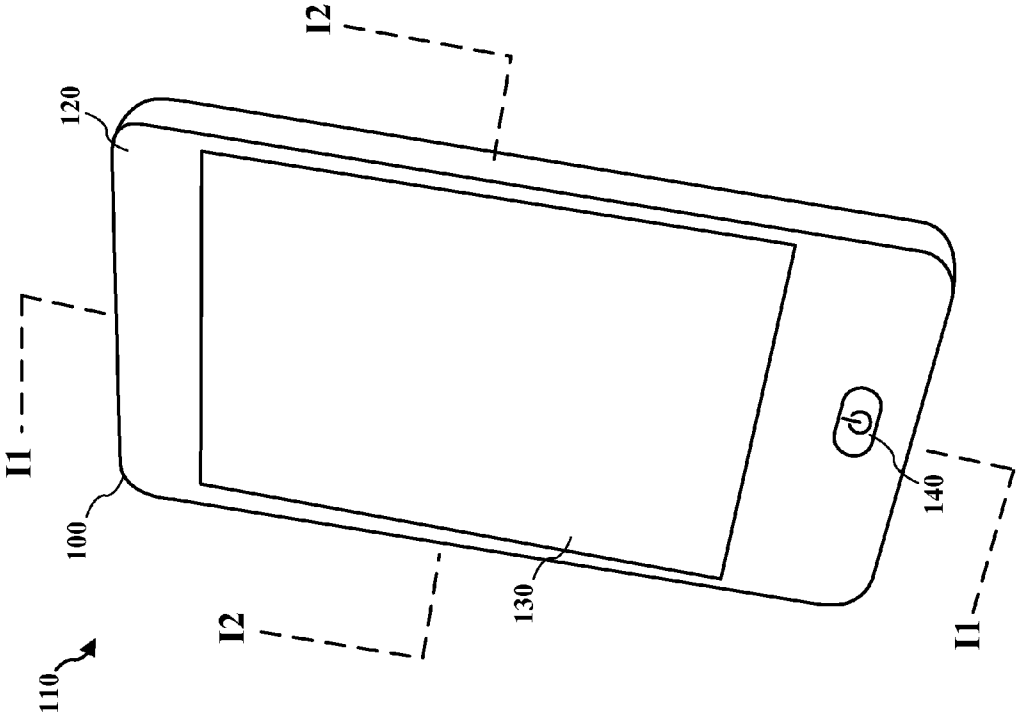

FIG. 1A

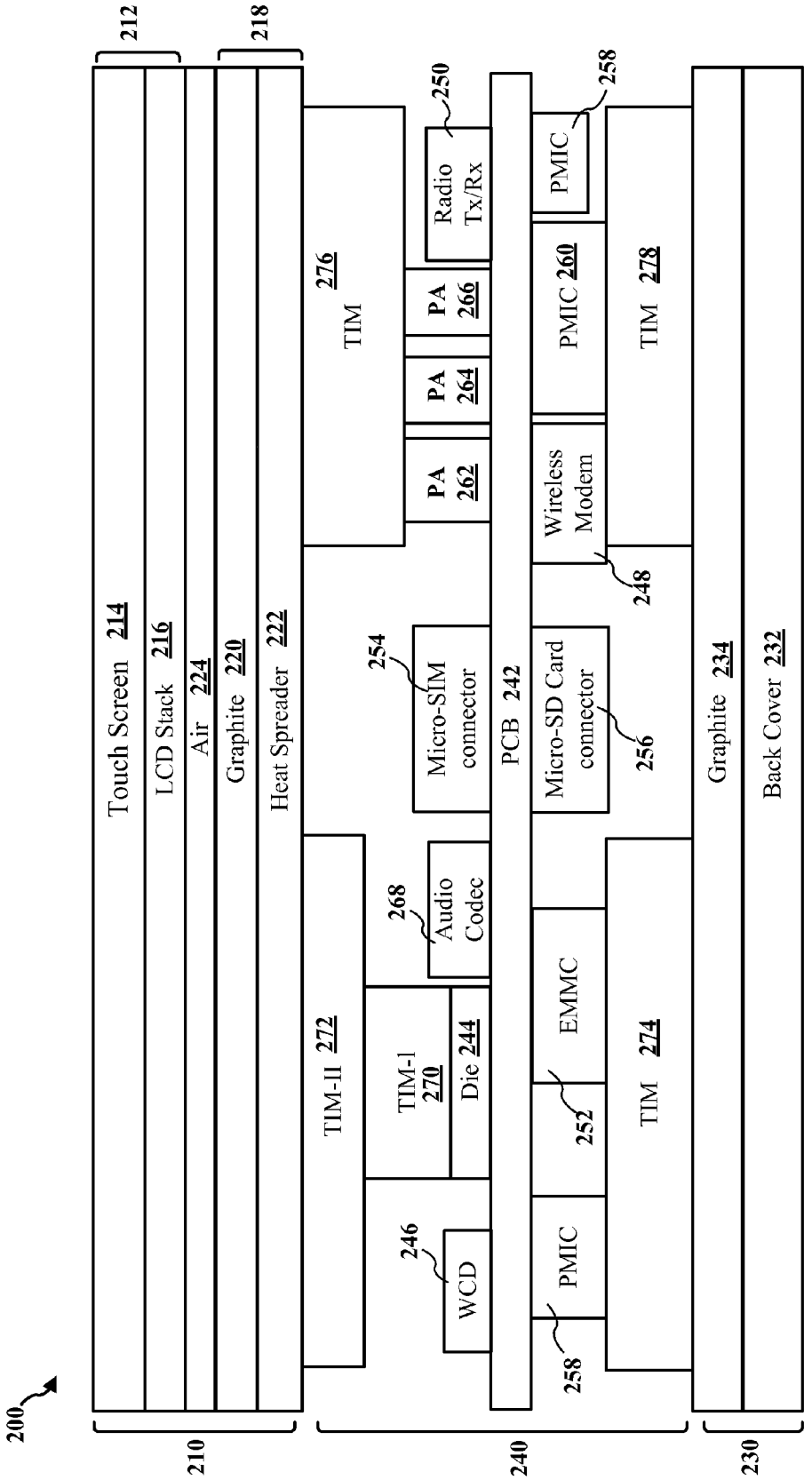
200
210
212
218
240
230
Touch Screen 214
LCD Stack 216
Air 224
Graphite 220
Heat Spreader 222
TIM 276
TIM-II 272
TIM-I 270
Die 244
WCD
246
Audio Codec
268
Micro-SIM connector
254
PCB 242
PA 262
PA 264
PA 266
Radio Tx/Rx
250
PMIC
258
EMMC
252
Micro-SD Card connector
256
Wireless Modem
248
PMIC 260
TIM 278
TIM 274
Graphite 234
Back Cover 232

FIG. 2A

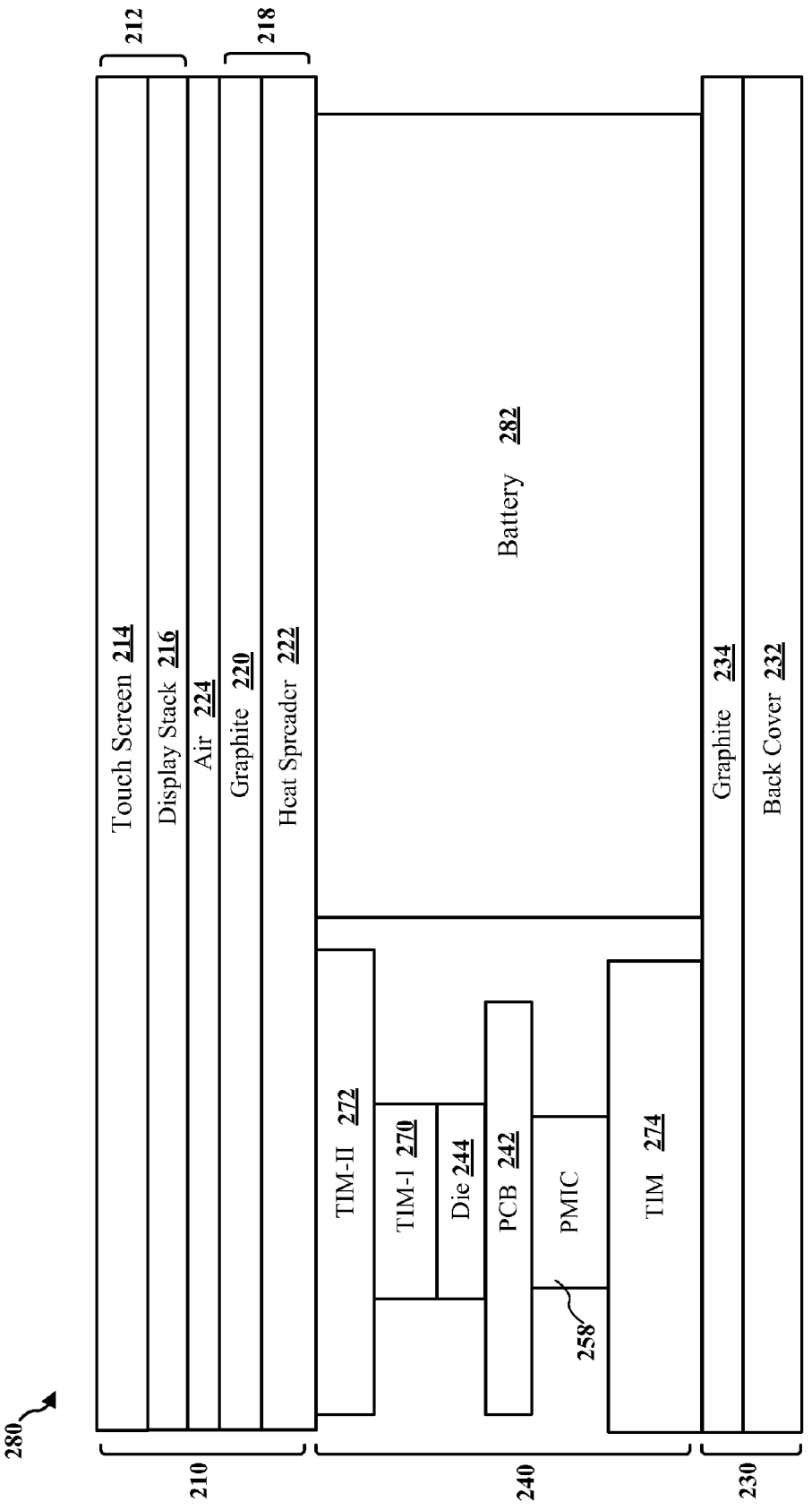
212
218
Touch Screen 214
Display Stack 216
Air 224
Graphite 220
Heat Spreader 222
Battery 282
Graphite 234
Back Cover 232
TIM-II 272
TIM-I 270
Die 244
PCB 242
PMIC
TIM 274
258
280
210
240
230

FIG. 2B

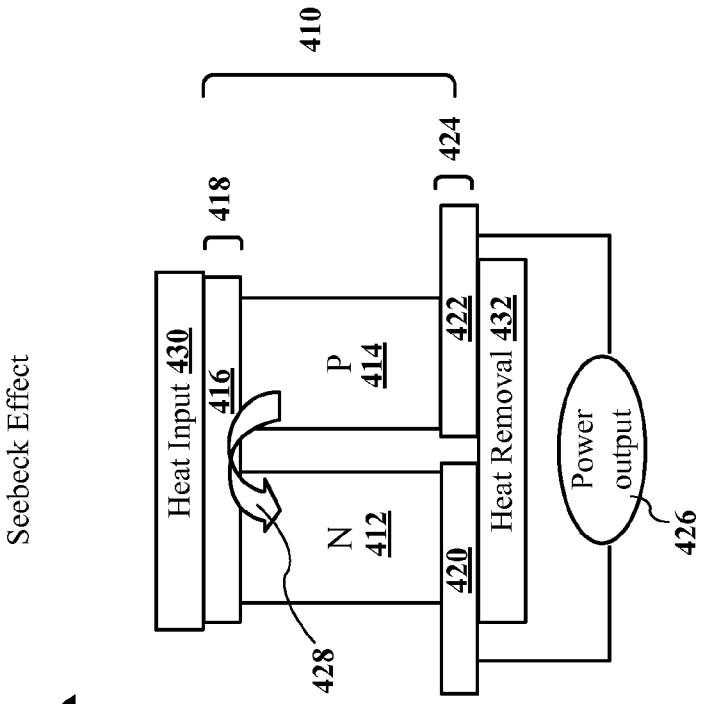
Seebeck Effect
400
410
418
424
Heat Input 430
416
P
414
422
Heat Removal 432
N
412
420
Power
output
426
428

FIG. 4

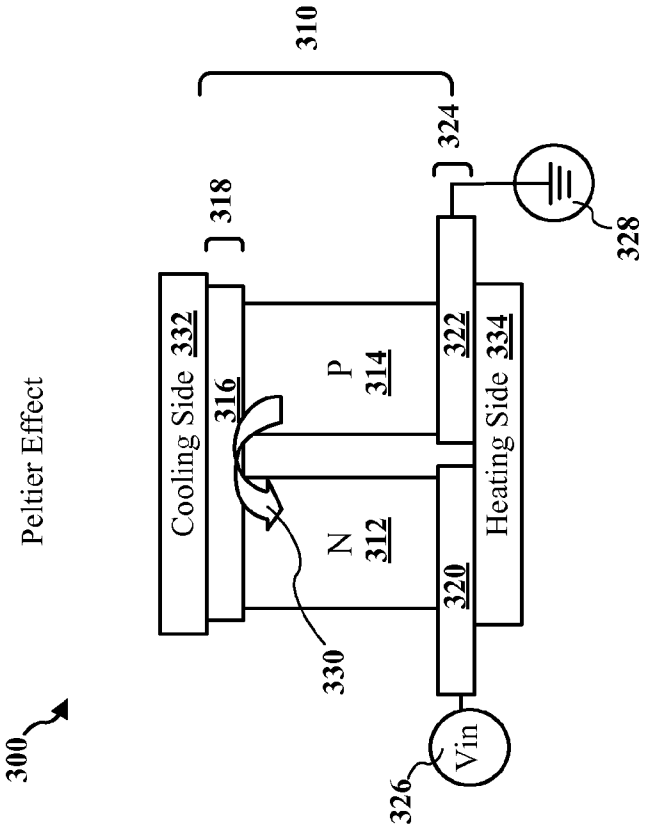
Peltier Effect
300
310
318
324
Cooling Side 332
316
P
314
322
Heating Side 334
N
312
320
328
330
Vin
326

FIG. 3

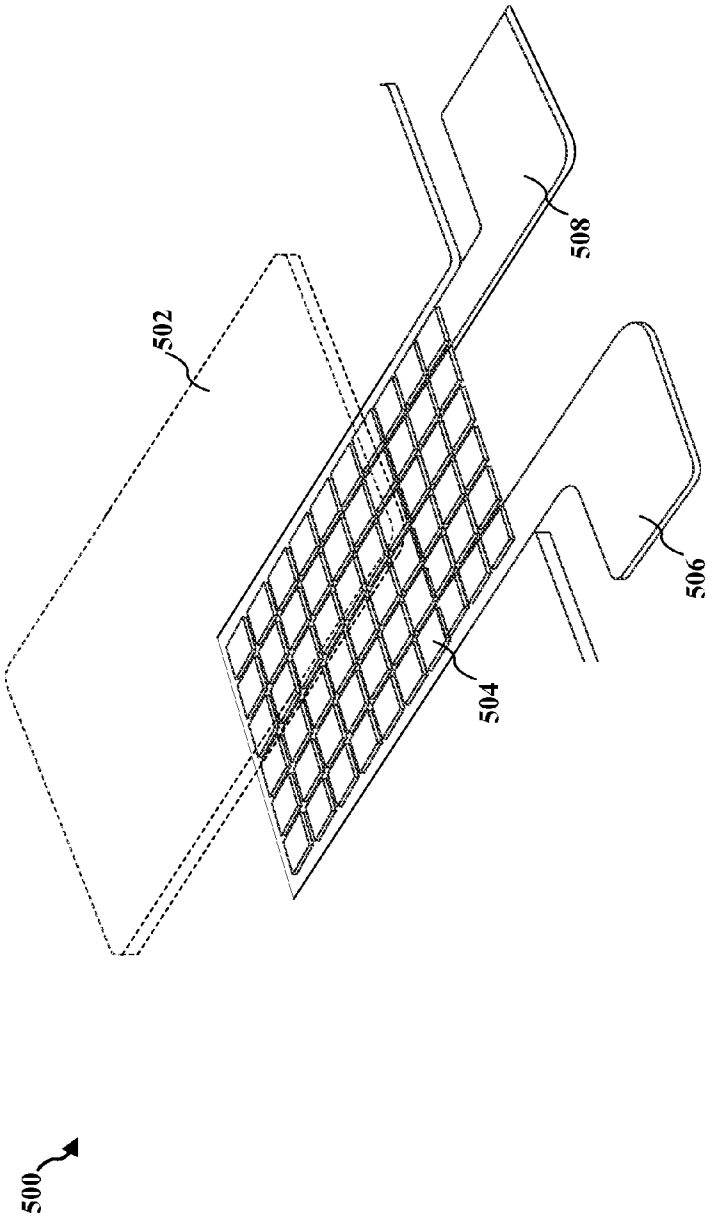

FIG. 5

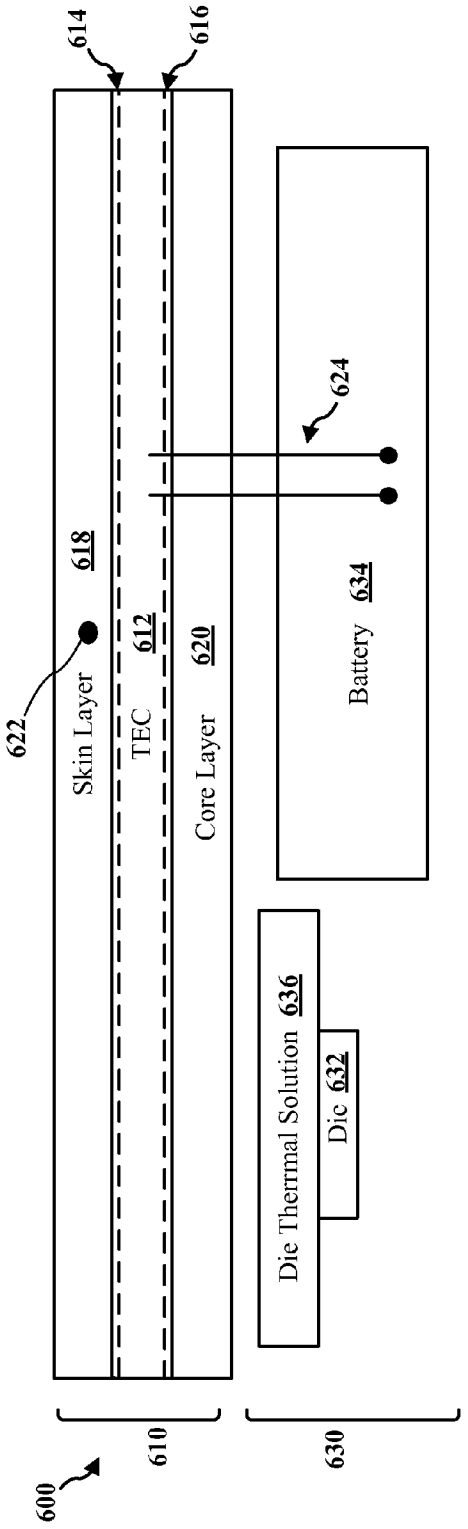
614
616
618
622
Skin Layer
TEC 612
Core Layer 620
624
Battery 634
Die Thermal Solution 636
Die 632
610
630
600

FIG. 6A

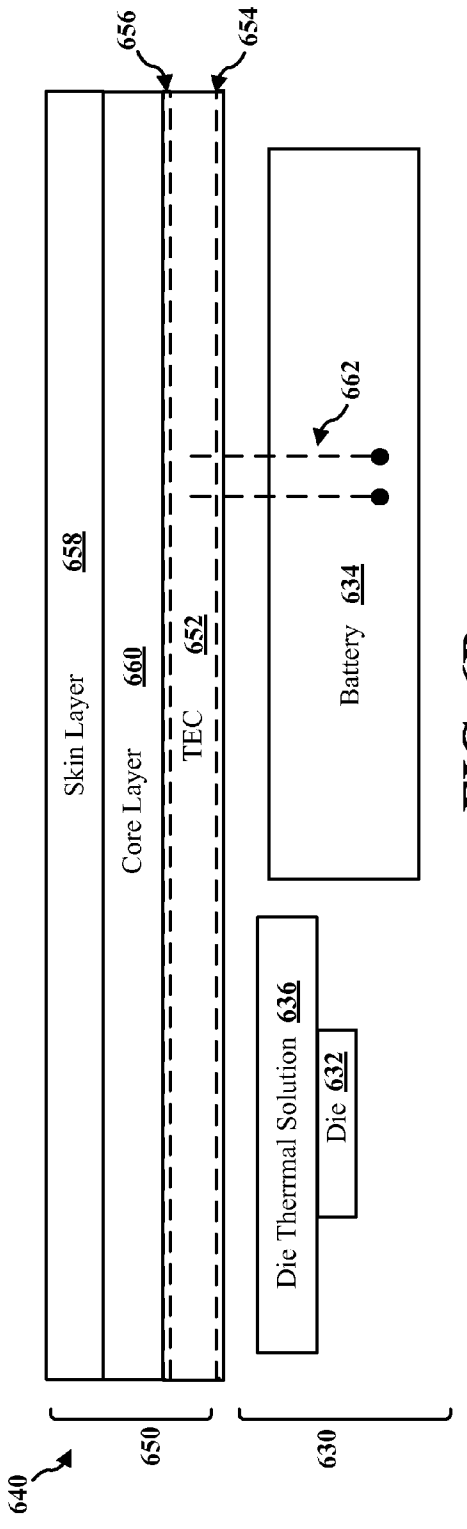
656
654
658
Skin Layer
Core Layer 660
TEC 652
662
Battery 634
Die Thermal Solution 636
Die 632
650
630
640

FIG. 6B

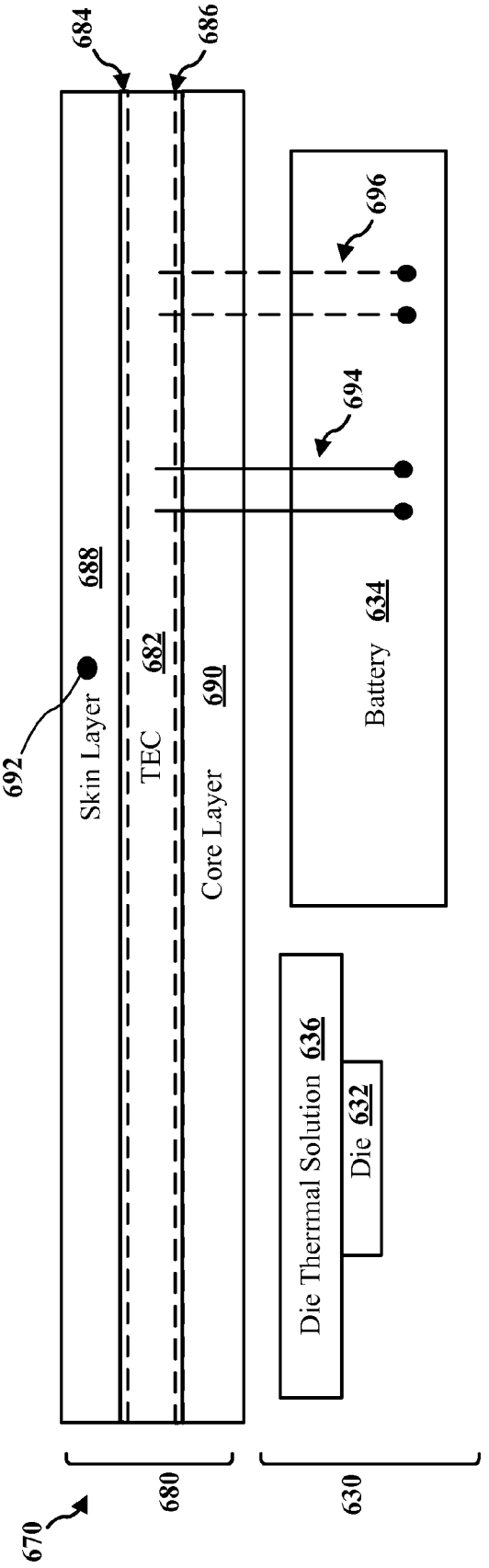
684
686
696
694
688
682
690
692
Skin Layer
TEC
Core Layer
Battery 634
Die Thermal Solution 636
Die 632
680
630
670

FIG. 6C

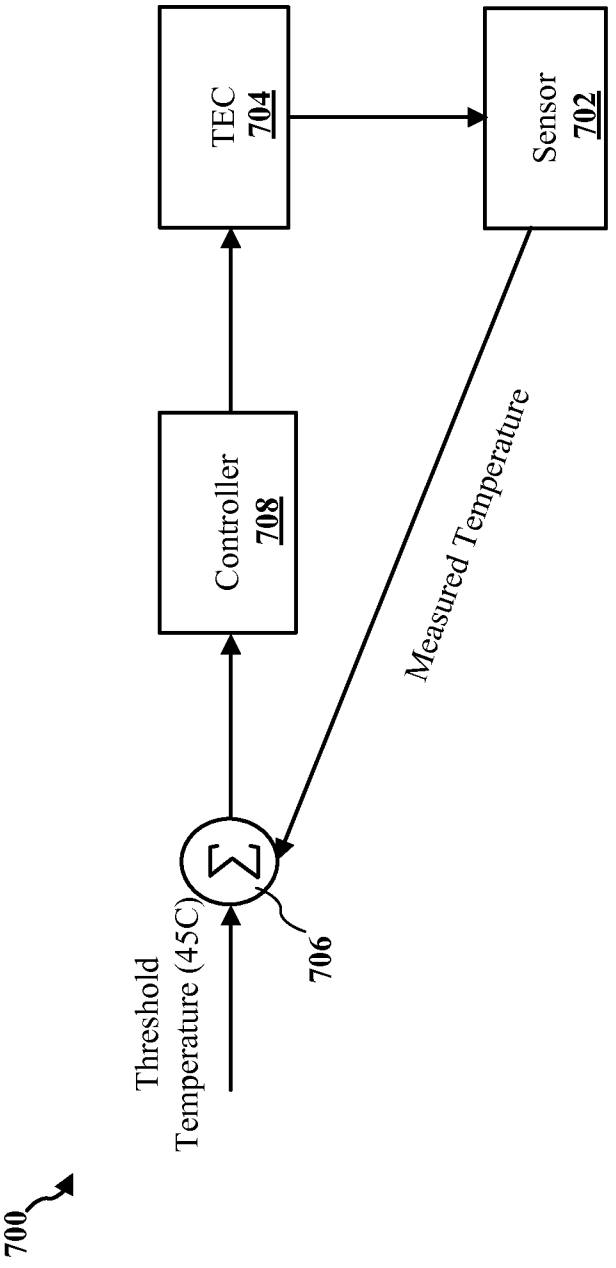
700
Threshold
Temperature (45C)
706
Controller
708
TEC
704
Sensor
702
Measured Temperature

FIG. 7

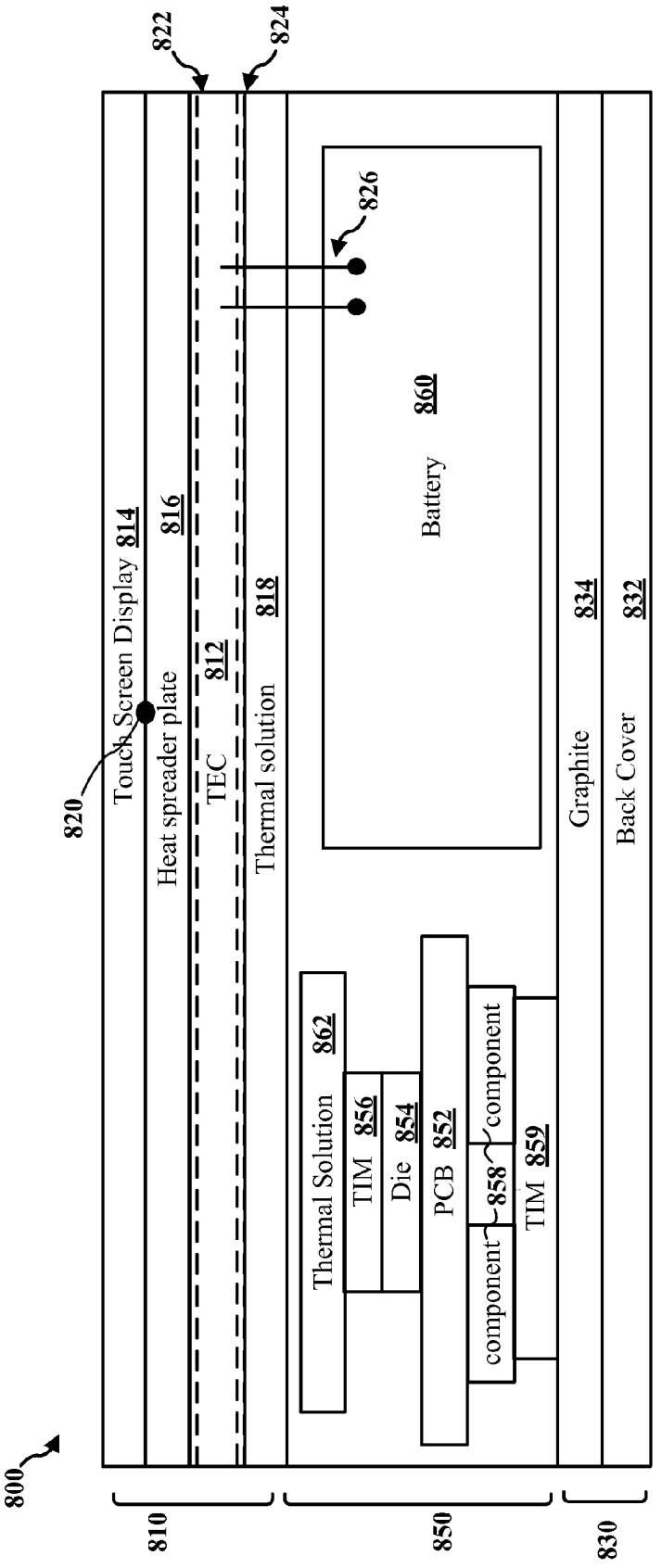
800
820
Touch Screen Display 814
Heat spreader plate 816
TEC 812
Thermal solution 818
822
824
826
Battery 860
Graphite 834
Back Cover 832
Thermal Solution 862
TIM 856
Die 854
PCB 852
component 858
component
TIM 859
810
850
830

FIG. 8

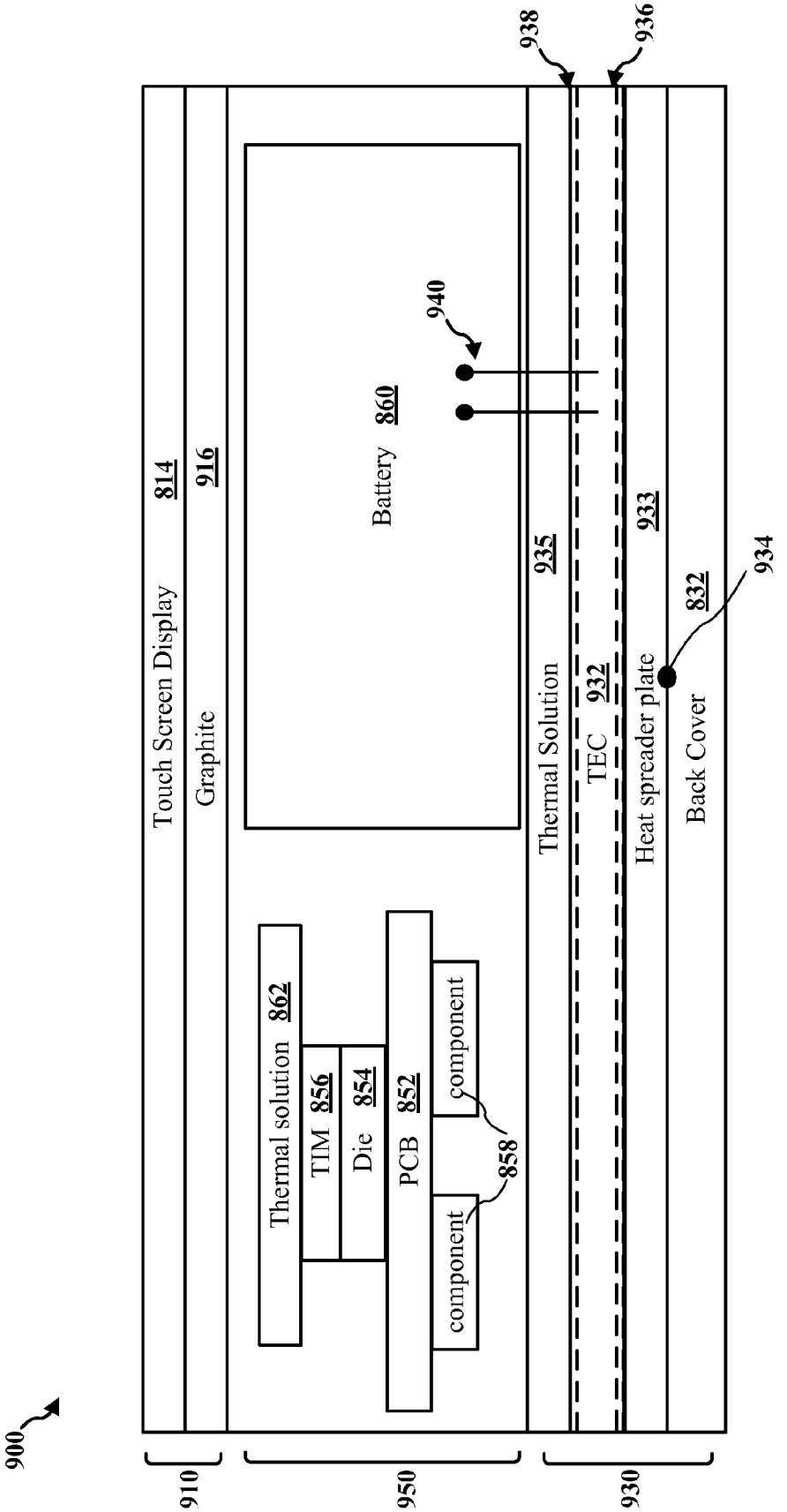
900
910
950
930
Touch Screen Display 814
Graphite 916
Battery 860
940
938
936
Thermal Solution 935
TEC 932
Heat spreader plate 933
Back Cover 832
934
Thermal solution 862
TIM 856
Die 854
PCB 852
component
component
858

FIG. 9

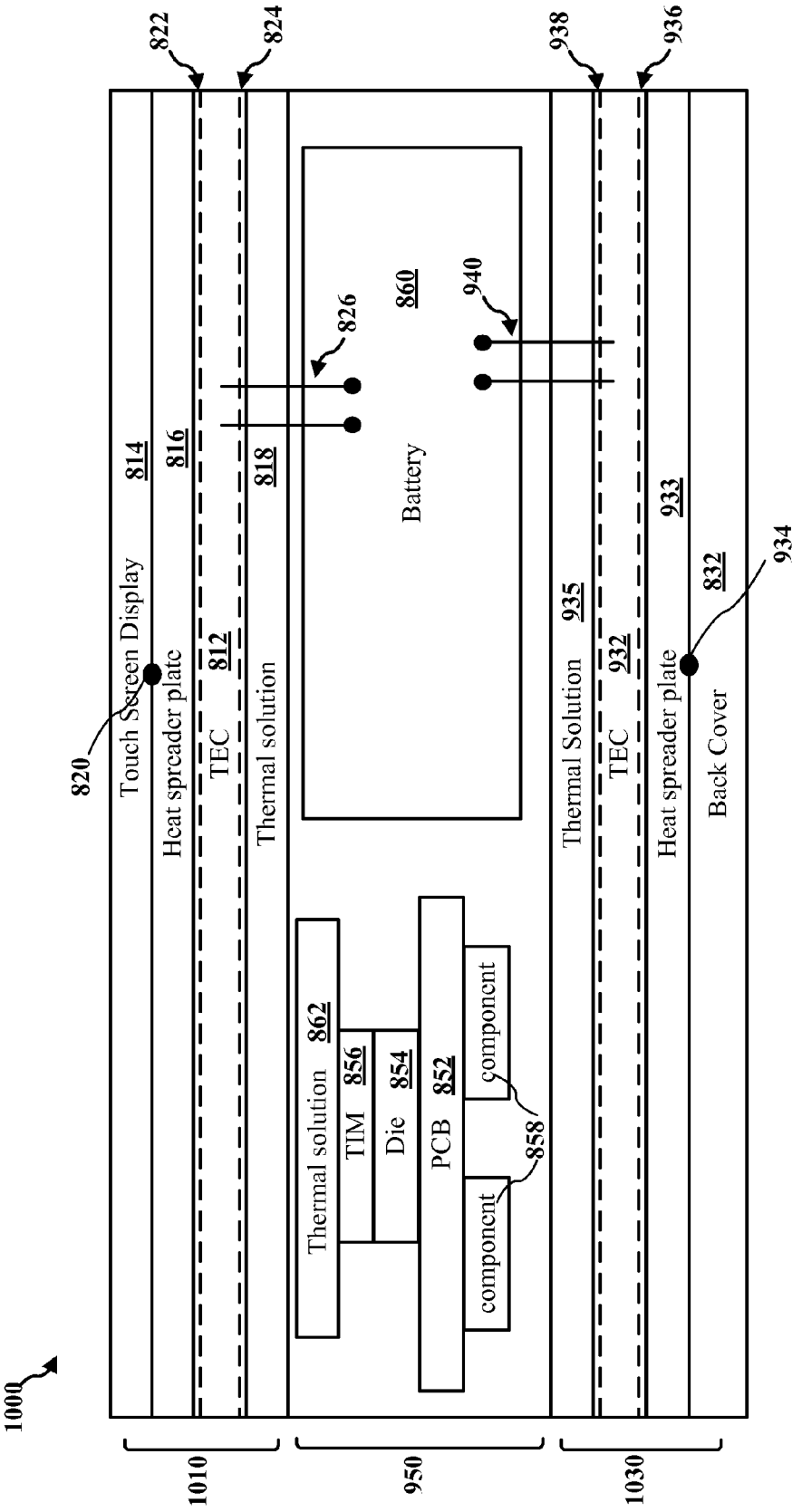
1000
820
Touch Screen Display 814
Heat spreader plate 816
TEC 812
Thermal solution 818
826
Battery 860
940
Thermal solution 862
TIM 856
Die 854
PCB 852
component
component
858
Thermal Solution 935
TEC 932
Heat spreader plate 933
Back Cover 832
934
822
824
938
936
1010
950
1030

FIG. 10

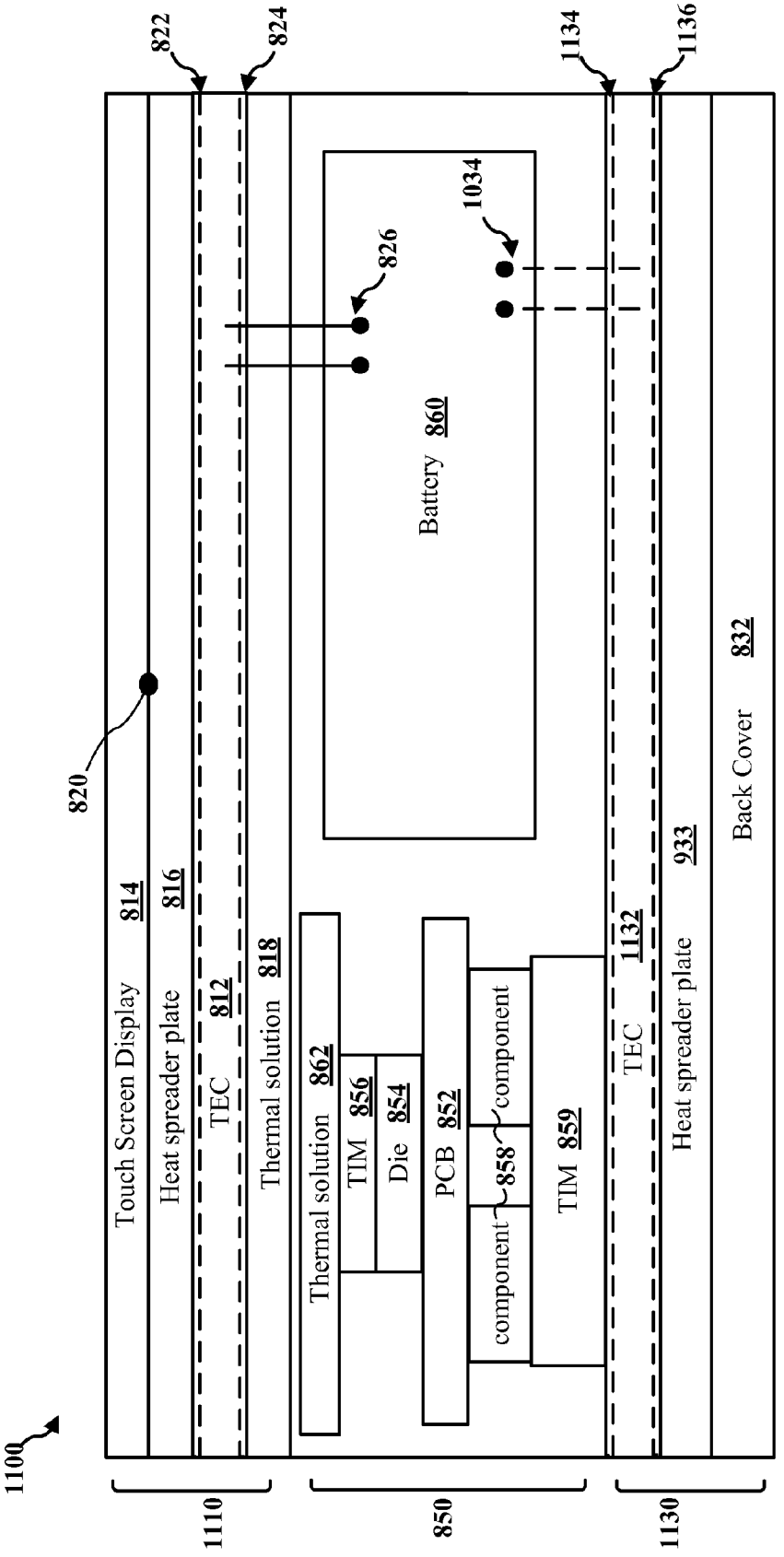
1100
1110
850
1130
820
822
824
1134
1136
826
1034
Touch Screen Display 814
Heat spreader plate 816
TEC 812
Thermal solution 818
Thermal solution 862
TIM 856
Die 854
PCB 852
component
858
component
TIM 859
Battery 860
TEC 1132
Heat spreader plate 933
Back Cover 832

FIG. 11

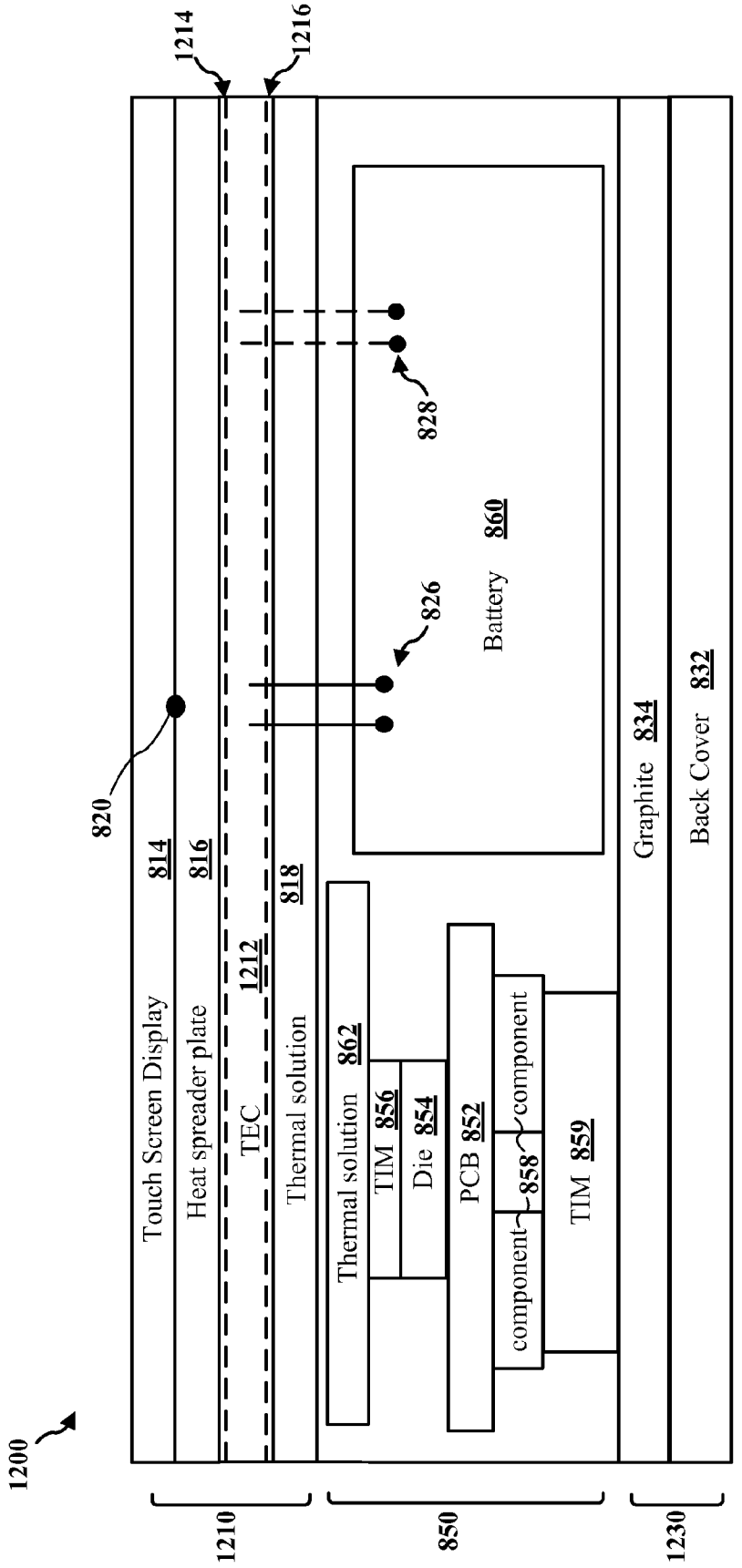
1200
1214
1216
820
826
828
Touch Screen Display 814
Heat spreader plate 816
TEC 1212
Thermal solution 818
Thermal solution 862
TIM 856
Die 854
PCB 852
component 858
component
TIM 859
Battery 860
Graphite 834
Back Cover 832
1210
850
1230

FIG. 12

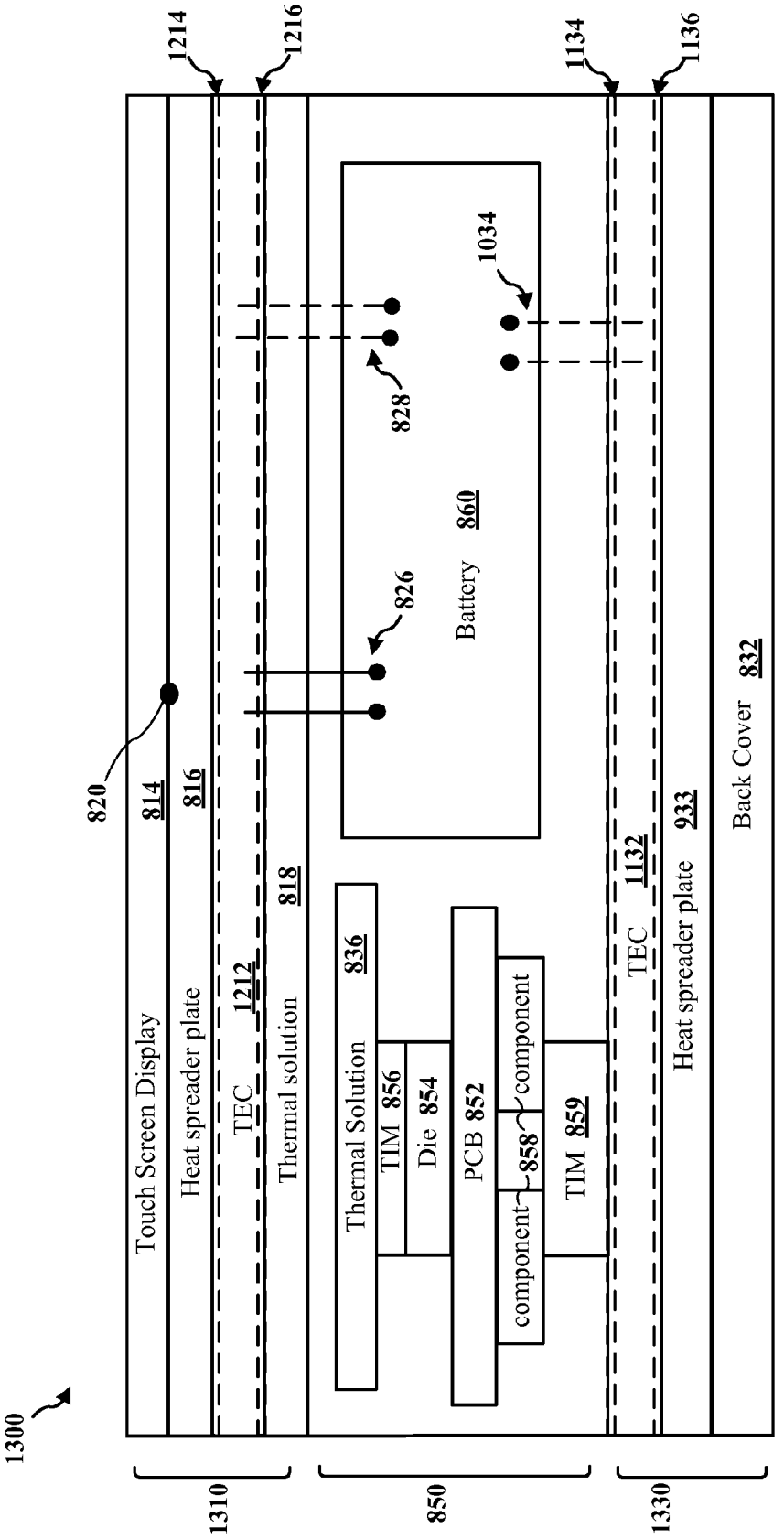
1300
1214
1216
1134
136
820
814
816
826
828
1034
Battery 860
Touch Screen Display
Heat spreader plate
TEC 1212
Thermal solution 818
Thermal Solution 836
TIM 856
Die 854
PCB 852
component
858
component
TIM 859
TEC 1132
Heat spreader plate 933
Back Cover 832
1310
850
1330

FIG. 13

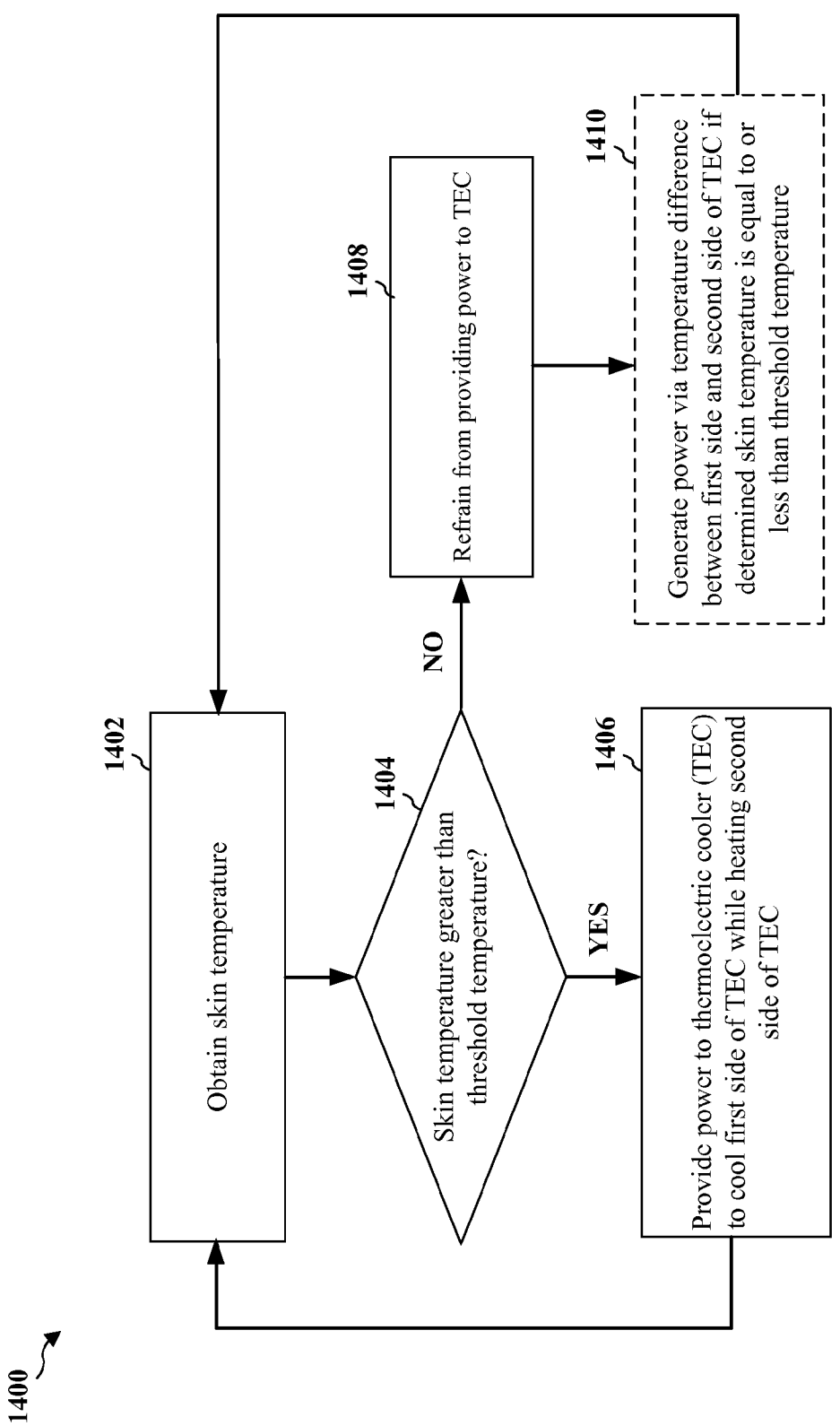
1400
1402
Obtain skin temperature
1404
Skin temperature greater than threshold temperature?
YES
NO
1406
Provide power to thermoelectric cooler (TEC) to cool first side of TEC while heating second side of TEC
1408
Refrain from providing power to TEC
1410
Generate power via temperature difference between first side and second side of TEC if determined skin temperature is equal to or less than threshold temperature

FIG. 14A

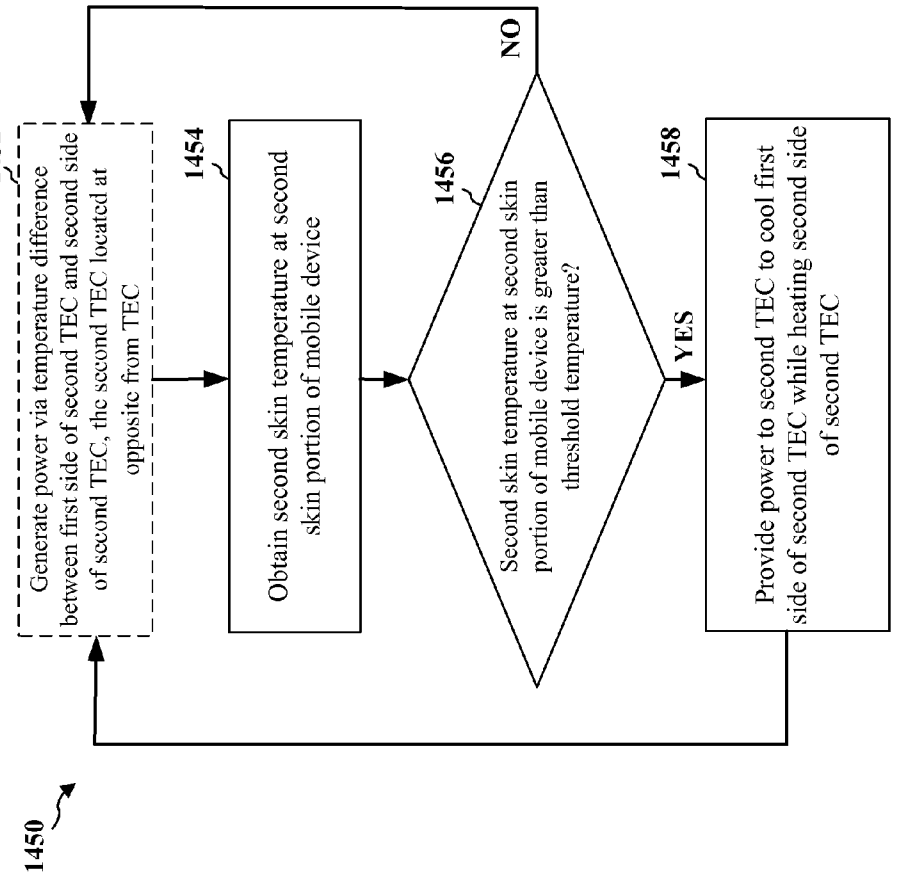
1450
1452
Generate power via temperature difference between first side of second TEC and second side of second TEC, the second TEC located at opposite from TEC
1454
Obtain second skin temperature at second skin portion of mobile device
1456
Second skin temperature at second skin portion of mobile device is greater than threshold temperature?
NO
YES
1458
Provide power to second TEC to cool first side of second TEC while heating second side of second TEC

FIG. 14B

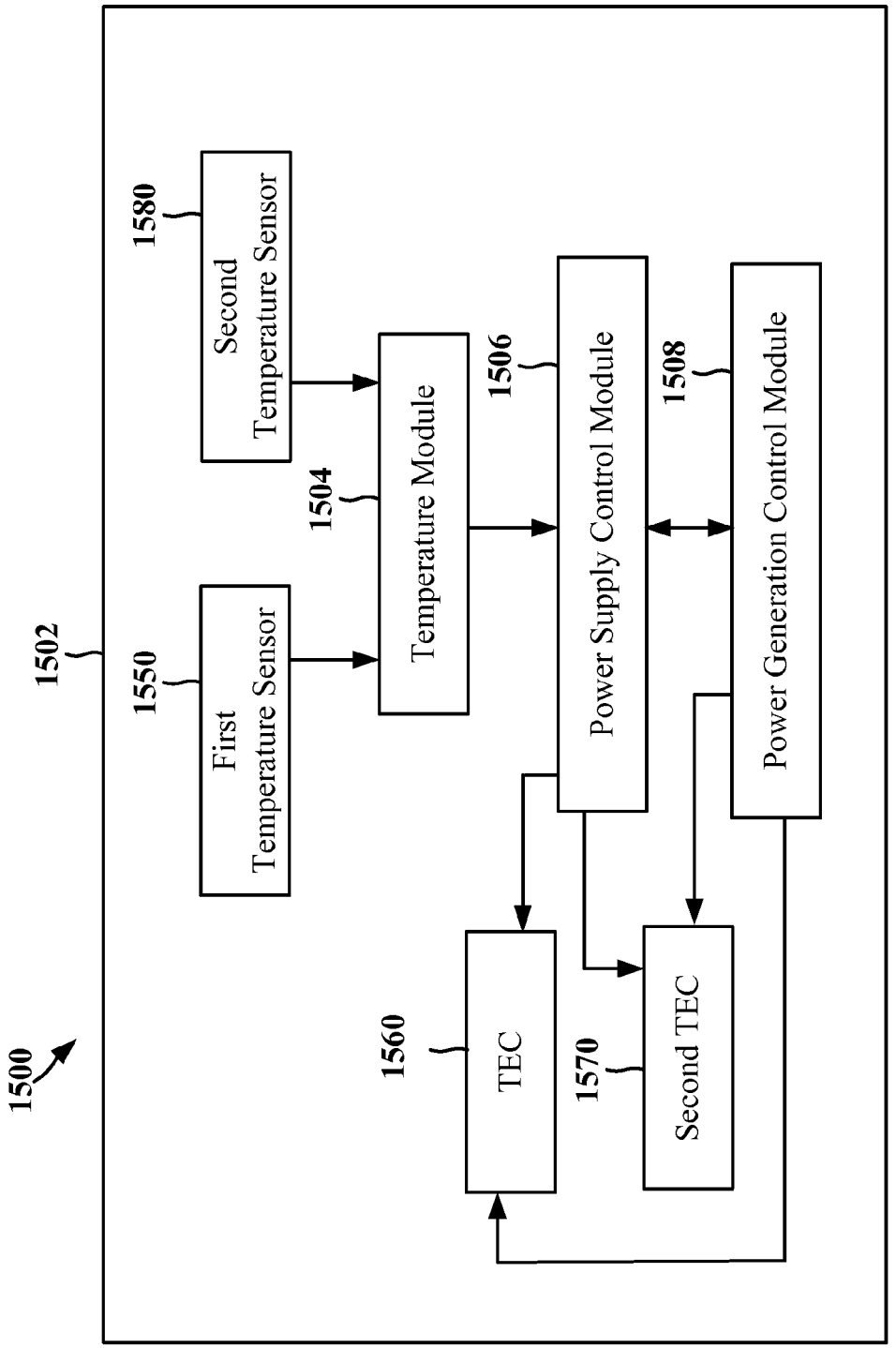
1500
1502
1550
First Temperature Sensor
1580
Second Temperature Sensor
1504
Temperature Module
1506
Power Supply Control Module
1508
Power Generation Control Module
1560
TEC
1570
Second TEC

FIG. 15

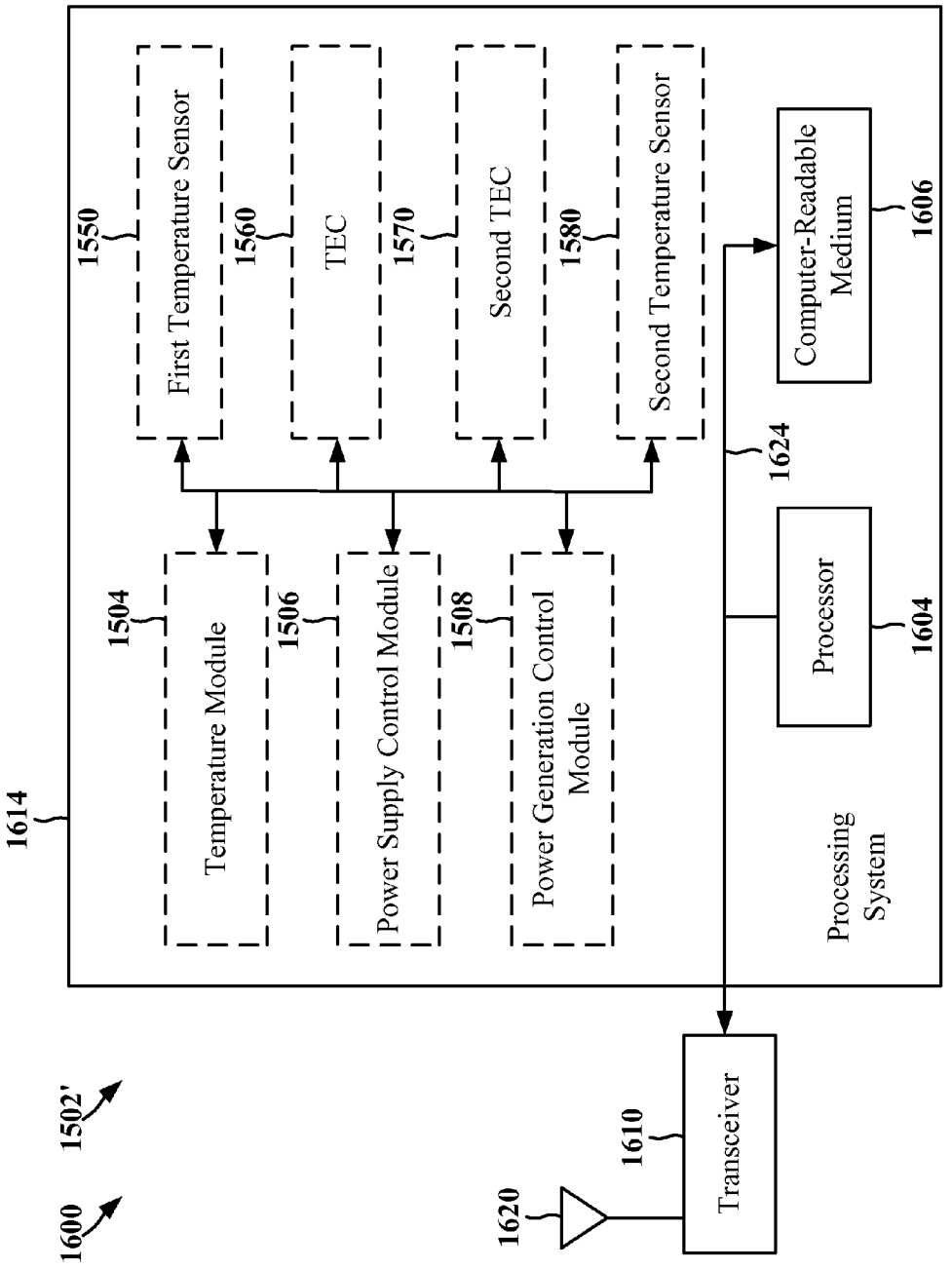
1600
1502'
1614
1550
First Temperature Sensor
1560
TEC
1570
Second TEC
1580
Second Temperature Sensor
1504
Temperature Module
1506
Power Supply Control Module
1508
Power Generation Control Module
1624
Processor
1604
Computer-Readable Medium
1606
Processing System
1610
Transceiver
1620

FIG. 16

METHOD OF AND AN APPARATUS FOR MAINTAINING CONSTANT PHONE SKIN TEMPERATURE WITH A THERMOELECTRIC COOLER AND INCREASING ALLOWABLE POWER/PERFORMANCE LIMIT FOR DIE IN A MOBILE SEGMENT

BACKGROUND

[0001] 1. Field

[0002] The present disclosure relates generally to a mobile device, and more particularly, to optimizing performance and user experience of the mobile device.

[0003] 2. Background

[0004] Devices such as mobile devices and computing devices have components that generate heat. Mobile device components generally generate more heat as the components perform at a higher level. Heat removal is often necessary to ensure optimal user experience with a device. Further, if a user directly contacts the device, then a device portion contacted should be maintained within a certain temperature range to optimize the user's experience with the device. For example, if heat from the device causes the device to become hot, a user that is in contact with the device may find the high temperature in the device unpleasant. Manufacturers design devices to efficiently remove the heat from mobile devices without significantly reducing performance of the mobile devices. Therefore, an approach to maintain a desired temperature while optimizing the performance of the device is desired.

SUMMARY

[0005] In an aspect of the disclosure, a method, a computer program product, and an apparatus are provided. The apparatus may determine whether a skin temperature at a skin portion of a mobile device is greater than a threshold temperature. The apparatus may provide power to a thermoelectric cooler (TEC) to cool a first side of the TEC while heating a second side of the TEC if the skin temperature is greater than the threshold temperature, wherein the first side of the TEC contacts the skin portion to cool the skin portion and the second side of the TEC faces a core of the mobile device. The skin temperature may be determined based on at least one of a die temperature, a power management integrated circuit (PMIC) power output, or a PMIC temperature.

[0006] The apparatus may further generate power via a temperature difference between the first side and the second side of the TEC if the determined skin temperature is equal to or less than the threshold temperature. The generated power may be stored in a battery of the mobile device or is provided directly to components of the mobile device.

[0007] The apparatus may further refrain from providing power to the TEC when the skin temperature is determined to be equal to or less than the threshold temperature.

[0008] The second side of the TEC may contact a thermal solution to cool heat generated from the second side of the TEC. The thermal solution may comprise at least one of a copper heat spreader, an aluminum heat spreader, a carbon heat spreader, or phase change material (PCM). The skin portion of the mobile device at which the skin temperature is measured may be at a display side of the mobile device. Alternatively, the skin portion of the mobile device at which the skin temperature is measured may be at a non-display side of the mobile device.

[0009] The apparatus may further determine whether a second skin temperature at a second skin portion of the mobile device is greater than the threshold temperature. The apparatus may further provide power to a second TEC to cool a first side of the second TEC while heating a second side of the second TEC if the second skin temperature is greater than the threshold temperature, wherein the first side of the second TEC contacts the second skin portion to cool the second skin portion and the second side of the second TEC faces the core of the mobile device.

[0010] The apparatus may further generate power via a temperature difference between a first side of a second TEC and a second side of the second TEC, the second TEC being located at an opposing side from the TEC within the apparatus. The first side of the second TEC may contact a second skin portion of the mobile device and the second side of the second TEC faces the core of the mobile device. Alternatively, the first side of the second TEC may face the core of the mobile device and the second side of the second TEC may contact a second skin portion of the mobile device. At least one of the first side and the second side of the second TEC may contact a thermal solution.

BRIEF DESCRIPTION OF THE DRAWINGS

[0011] FIGS. **1**A and **1**B are diagrams illustrating an example of a mobile device.

[0012] FIGS. **2**A and **2**B are diagrams illustrating cross sections of an exemplary mobile device.

[0013] FIG. **3** is a diagram illustrating a thermoelectric cooler used for a Peltier effect

[0014] FIG. **4** is a diagram illustrating a thermoelectric cooler used for a Seebeck effect.

[0015] FIG. **5** illustrates an exemplary thermoelectric cooler structure implemented in a mobile device.

[0016] FIGS. **6**A-**6**C illustrate exemplary implementations of a thermoelectric cooler in a mobile device.

[0017] FIG. **7** illustrates a closed-loop temperature control system using a thermoelectric cooler according to an embodiment.

[0018] FIG. **8** is a diagram illustrating a cross section of a mobile device including a thermoelectric cooler according to one embodiment.

[0019] FIG. **9** is a diagram illustrating a cross section of a mobile device including a thermoelectric cooler according to another embodiment.

[0020] FIG. **10** is a diagram illustrating a cross section of a mobile device including two thermoelectric coolers according to an embodiment.

[0021] FIG. **11** is a diagram illustrating a cross section of a mobile device including two thermoelectric coolers according to another embodiment.

[0022] FIG. **12** is a diagram illustrating a cross section of a mobile device including a thermoelectric cooler according to another embodiment.

[0023] FIG. **13** is a diagram illustrating a cross section of a mobile device including two thermoelectric coolers according to another embodiment.

[0024] FIGS. **14**A and **14**B are flow charts of a method of utilizing one or more thermoelectric coolers.

[0025] FIG. **15** is a conceptual data flow diagram illustrating the data flow between different modules/means/components in an exemplary apparatus.

[0026] FIG. **16** is a diagram illustrating an example of a hardware implementation for an apparatus employing a processing system.

DETAILED DESCRIPTION

[0027] The detailed description set forth below in connection with the appended drawings is intended as a description of various configurations and is not intended to represent the only configurations in which the concepts described herein may be practiced. The detailed description includes specific details for the purpose of providing a thorough understanding of various concepts. However, it will be apparent to those skilled in the art that these concepts may be practiced without these specific details. In some instances, well known structures and components are shown in block diagram form in order to avoid obscuring such concepts.

[0028] Several aspects of the present disclosure will now be presented with reference to various apparatus and methods. These apparatus and methods will be described in the following detailed description and illustrated in the accompanying drawings by various blocks, modules, components, circuits, steps, processes, algorithms, etc. (collectively referred to as "elements"). These elements may be implemented using electronic hardware, computer software, or any combination thereof Whether such elements are implemented as hardware or software depends upon the particular application and design constraints imposed on the overall system.

[0029] By way of example, an element, or any portion of an element, or any combination of elements may be implemented with a "processing system" that includes one or more processors. Examples of processors include microprocessors, microcontrollers, digital signal processors (DSPs), field programmable gate arrays (FPGAs), programmable logic devices (PLDs), state machines, gated logic, discrete hardware circuits, and other suitable hardware configured to perform the various functionality described throughout this disclosure. One or more processors in the processing system may execute software. Software shall be construed broadly to mean instructions, instruction sets, code, code segments, program code, programs, subprograms, software modules, applications, software applications, software packages, routines, subroutines, objects, executables, threads of execution, procedures, functions, etc., whether referred to as software, firmware, middleware, microcode, hardware description language, or otherwise.

[0030] Accordingly, in one or more exemplary embodiments, the functions described may be implemented in hardware, software, firmware, or any combination thereof. If implemented in software, the functions may be stored on or encoded as one or more instructions or code on a computer-readable medium. Computer-readable media includes computer storage media. Storage media may be any available media that can be accessed by a computer. By way of example, and not limitation, such computer-readable media can comprise a random-access memory (RAM), a read-only memory (ROM), an electrically erasable programmable ROM (EEPROM), compact disk ROM (CD-ROM) or other optical disk storage, magnetic disk storage or other magnetic storage devices, or any other medium that can be used to carry or store desired program code in the form of instructions or data structures and that can be accessed by a computer. Disk and disc, as used herein, includes CD, laser disc, optical disc, digital versatile disc (DVD), and floppy disk where disks usually reproduce data magnetically, while discs reproduce data optically with lasers. Combinations of the above should also be included within the scope of computer-readable media.

[0031] FIGS. **1**A and **1**B illustrate an exemplary mobile device **100**. The mobile device **100** may be a mobile phone, a tablet, a portable media player, a camera, high-tech glasses, a set-top box, audio/video appliances or any electronic device which operates via human interaction or skin contact. FIG. **1**A illustrates a front view **110** of the mobile device **100**, and FIG. **1**B illustrates a rear view **150** of the mobile device **100**. The mobile device **100** has a front cover **120**, a display screen **130** and a power button **140** on a front surface of the mobile device **100**. The front cover **120** covers a front portion of the mobile device **100**. The display screen **130** may include a liquid crystal display (LCD) unit and/or a touch screen that covers the front portion of the mobile device **100**. The power button **140** is used to turn on or off the power of the mobile device **100**. The mobile device **100** has a back cover **160** to cover a back portion of the mobile device **100**. A camera **170** may be mounted on a back surface of the mobile device **100**. An additional camera may be mounted on the front cover **120**.

[0032] FIGS. **2**A and **2**B are diagrams illustrating cross sections of an exemplary mobile device. The mobile device **100** of FIG. **1** may include structures illustrated in FIGS. **2**A and **2**B. FIG. **2**A is a first cross section view **200** illustrating a cross section I**1** of the mobile device **100** of FIG. **1**A. FIG. **2**B is a side view illustrating a cross section I**2** of FIG. **1**A. According to FIG. **2**A, the mobile device **100** illustrated in the first cross section view **200** has a front portion **210** and a back portion **230**, and an inside portion **240** located between the front portion **210** and the back portion **230**. The front portion **210** includes a touch screen display **212** that includes a touch screen **214** located on a display stack **216**. The display stack **216** may be an LCD stack. The front portion **210** includes a first heat dissipation layer **218** located below the touch screen display **212** to reduce heat generated from the mobile device **100**. The first heat dissipation layer **218** may include a graphite layer **220** and a heat spreader **222** on which the graphite layer **220** is located. The heat spreader **222** may include at least one of a copper heat spreader, an aluminum heat spreader, a carbon heat spreader, a vapor chamber, a heat pipe, or phase change material (PCM). In the front portion **210**, there may optionally be an air gap **224** between the touch screen display **212** and the first heat dissipation layer **218**. The back portion **230** includes a back cover **232** to cover the back portion **230** and a second heat dissipation layer **234** to reduce heat generated from the mobile device **100**. The second heat dissipation layer **234** may include a graphite layer, and may additionally include a copper heat spreader or an aluminum heat spreader.

[0033] The inside portion **240** includes a printed circuit board (PCB) **242** having one or more electrical components located thereon. A die or a processor **244** to perform tasks of the mobile device **100** is located on the PCB **242**. Communication components such as a wireless communication device (WCD) **246**, a wireless modem **248**, and a radio transceiver **250** may be located on the PCB **242**. The wireless communication device **246** may be used to communicate with a core network of a cellular network. The wireless modem **248** may be used for local area network communication. Storage-related components such as an embedded multimedia card

(EMMC) **252**, micro subscriber identification module (micro-SIM) card connector **254**, and micro secure digital (micro-SD) card connecter **256** may be located on the PCB **242**. PCB **242** may include one or more power management integrated circuits (PMIC) **258**, **260** to manage power to various components of the mobile device **100**, and one or more power amplifiers **262**, **264**, **266** located thereon. An audio codec chip **268** may be located on the PCB **242**. A first die thermal interface material portion (TIM-I) **270** may be provided on the die **244** and a second die thermal interface material portion (TIM-II) **272** may be provided on the TIM-I **270** and may contact the heat spreader **222**. Other thermal interface material portions (TIM) **274**, **276**, **278** may be implemented on and around the electrical components located on the PCB **242**. It is noted that the layout of the PCB components illustrated in FIG. **2**A is an example and the layout of the PCB components on top and bottom sides of the PCB **242** may vary. For example, if TIM **274** and TIM **278** on the back side of the PCB are omitted from the PCB layout, there may be a small air gap between the components on the back side of the PCB **242** and the back portion **230** including the second heat dissipation layer **234** and the back cover **232**.

[0034] FIG. **2**B is a second cross section view **280** illustrating a cross section I**2** of the mobile device **100** of FIG. **1**A. FIG. **2**B illustrates a side view of the front portion **210**, the back portion **230**, and the inside portion **240** that are illustrated in FIG. **2**A. FIG. **2**B illustrates a side view of the touch screen display **212** including the touch screen **214** and the display stack **216**, the first heat dissipation layer **218** including the graphite layer **220** and the heat spreader **222**, the air gap **224**, the back cover **232**, and the second heat dissipation layer **234** that are illustrated in FIG. **2**A. FIG. **2**B also illustrates a side view of the PCB **242**, the die **244**, the PMIC **258**, the TIM-I **270**, the TIM-II **272**, and the TIM **274** that are illustrated in FIG. **2**A. As shown in FIG. **2**B, the mobile device **100** includes a battery **282**.

[0035] In a mobile device (e.g., the mobile device **100**) heat within the mobile device may be removed via conduction inside the mobile device and via natural convection and radiation on the surface of a skin of the mobile device. In the present disclosure, the mobile device skin may be the portion of the mobile device **100** that faces an exterior of the mobile device, such as the touch screen display **212** and the back cover **232**. For example, heat from the mobile device components (e.g., the die **244**) in the inside portion **240** of the mobile device **100** may be conducted within the mobile device **100**. The heat may reach the device skin through conduction. The heat may then be removed through natural convection and radiation on the surface of the device skin. Inside the mobile device **100**, there is little space that can be utilized to remove the heat from the die **244**. Thus, heat generated from the die **244** is removed mainly through the device skin. As the die power consumption increases, the die **244** generates heat that causes an increase in the die temperature. The device skin temperature increases as well due to the heat from the die **244**. The increased die temperature may cause the device skin temperature to exceed a maximum allowable device skin temperature for human interaction (e.g., approximately 40~45° C.). The increased die temperature may also generate a hot spot on a portion of a mobile device surface corresponding to a location of the die, where the hot spot on the mobile device surface is hotter than the rest of the mobile device surface. Notably, a maximum allowable temperature limit for a die **244** to maintain reliability generally ranges from 105~125° C., which is much higher than the maximum allowable device skin temperature.

[0036] Conventionally, temperature mitigation is used to maintain the device skin temperature below the maximum allowable device skin temperature. For example, the device skin temperature is maintained below the maximum allowable device skin temperature of 45° C. when the die temperature reaches approximately 70~85° C. Temperature mitigation refers to reducing the power and performance at the die to reduce the die temperature, thereby reducing the skin temperature. Because the die temperature above 70~85° C. causes the skin temperature to rise above the allowable temperature of 45° C., the temperature mitigation ensures that the die temperature does not exceed 70~85° C. In a mobile device, a maximum allowable skin temperature (e.g., 40~45° C.) is the critical temperature that limits the die temperature to a certain mitigation temperature level (e.g., 70~85° C.). For example, conventional mobile phones may be configured such that the die temperature of a most intensive central processing unit/graphics processing unit (CPU/GPU) is approximately 70~85° C., with the skin temperature of 45° C. However, higher die performance can be achieved if the die temperature is allowed to reach a higher temperature since the die generates more heat as the die provides higher performance at higher power. For example, higher die performance can be achieved if the die temperature is allowed to reach 105~125° C., compared to the die performance at 70~85° C., assuming that the same components (e.g., the same thermal solution) are used for the die. In a conventional mobile phone, the skin temperature reaches the allowable skin temperature of (e.g., 40~45° C.) before the die temperature reaches its allowable limit of 105~125° C. Thus, when temperature mitigation with respect to the skin temperature is implemented, the die temperature is not allowed to reach the maximum allowable limit of 105~125° C. to maintain the allowable skin temperature of 45° C. or below, and therefore die performance is limited by a mobile device skin temperature and the hot spot on the mobile device surface.

[0037] For at least the reasons discussed supra, an effective approach to maintain a suitable mobile device skin temperature with improved die performance is desired to achieve an optimal mobile device experience.

[0038] FIG. **3** is a diagram **300** illustrating a thermoelectric cooler (TEC) utilizing a Peltier effect. The Peltier effect is a presence of heating or cooling at an electrified junction of two different conductors. The TEC utilizing the Peltier effect uses power (e.g., direct current power) to move heat from a first portion of the TEC to a second portion of the TEC, thus cooling the first portion while heating the second portion. Therefore, the first portion of the TEC utilizing the Peltier effect may be used to cool the device skin to reduce the device skin temperature.

[0039] In particular, a TEC **310** utilizing the Peltier effect includes an N-semiconductor **312** and a P-semiconductor **314**. The TEC **310** also includes a P-N junction conductor **316** contacting a first side of the N-semiconductor **312** and a first side of the P-semiconductor **314** that are in a first junction **318**. In the TEC **310**, a second side of the N-semiconductor **312** contacts an N-side junction conductor **320** and a second side of the P-semiconductor **314** contacts a P-side junction conductor **322**, where the N-side junction conductor **320** and the P-side junction conductor **322** are in a second junction **324**. For the TEC **310** utilizing the Peltier effect, a voltage

source **326** is connected to the N-side junction conductor **320** and a ground **328** is connected to the P-side junction conductor **322**. When the voltage source **326** supplies an input voltage (Vin) to the TEC **310**, the input voltage (Vin) causes electrons to flow from the P-semiconductor **314** to the N-semiconductor **312** through the P-N junction conductor **316**, as shown by arrow **330**. With the electrons flowing in the direction of the arrow **330**, heat from a cooling side **332** and the first junction **318** is transferred to the second junction **324** and a heating side **334**, thereby cooling the cooling side **332** and heating the heating side **334**. In summary, the TEC **310** utilizing the Peltier effect cools the cooling side **332** and heats the heating side **334** when the input voltage (Vin) is supplied by the voltage source **326**.

[0040] FIG. **4** is a diagram **400** illustrating a TEC used for a Seebeck effect. The Seebeck effect is a conversion of a temperature difference between two junctions directly into electricity. The TEC utilizing the Seebeck effect generates power when there is a temperature difference between a first portion of the TEC and a second portion of the TEC. Thus, when there is a temperature difference between different portions of the mobile device, the TEC utilizing the Seebeck effect may generate power using the temperature difference.

[0041] In particular, the TEC **410** utilizing the Seebeck effect includes an N-semiconductor **412** and a P-semiconductor **414**. The TEC **410** further includes a P-N junction conductor **416** that contacts a first side of the N-semiconductor **412** and a first side of the P-semiconductor **414** that are in a first junction **418**. In the TEC **410**, a second side of the N-semiconductor **412** contacts an N-side junction conductor **420** and a second side of the P-semiconductor contacts a P-side junction conductor **422**, where the N-side junction conductor **420** and the P-side junction conductor **422** are in the second junction **424**. When using the Seebeck effect, a power output destination **426** is connected to the N-side junction conductor **420** and the P-side junction conductor **422**. When a heat input side **430** of the TEC **410** is hotter than a heat removal side **432** of the TEC **410**, the temperature difference between the heat input side **430** and the heat removal side **432** causes electrons to flow from the P-semiconductor **414** to the N-semiconductor **412** through the P-N junction conductor **416**, as shown by arrow **428**. With the electrons flowing in the direction of the arrow **428**, power with positive voltage is generated and is output to the power output destination **426**. Further, when the heat removal side **432** of the TEC **410** is hotter than the heat input side **430** of the TEC **410**, power with negative voltage is generated and is output to the power output destination **426**. In summary, the TEC **410** utilizing the Seebeck effect generates power when there is a temperature difference between the heat input side **430** and the heat removal side **432**.

[0042] FIG. **5** illustrates an exemplary TEC structure **500** implemented in a mobile device. A TEC structure **500** may include multiple TECs **504** forming a TEC layer. A mobile device skin surface **502** may be placed on the multiple TECs **504**. The TECs **504** may be thin TECs such that thicknesses of the TECs **504** do not affect a thickness of the mobile device significantly. Each of the TECs **504** may be connected to an N connector **506** that is connected to an N semiconductor of each of the TECs **504**. Each of the TECs **504** may also be connected to a P connector **508** that is connected to a P semiconductor of each of the TECs **504**. To utilize the Peltier effect, the N connector **506** and the P connector **508** may be connected to a power source supplying power to the TECs **504**. If the TECs **504** utilize the Seebeck effect to generate power via a temperature difference across the TECs **504**, the N connector **506** and the P connector **508** may be connected to a battery to store the generated power and/or maybe connected to various parts of the mobile device to directly provide the generated power thereto. For simplicity, a TEC and a TEC layer may both be referred to as a TEC hereinafter. It is noted that the layout of the TECs illustrated in FIG. **5** is an example and the layout of the TECs may vary. For example, there may be a single layer or multiple layers of TECs covering an entire area or a small area under the mobile device skin surface **502**.

[0043] FIGS. **6**A-**6**C illustrate exemplary implementations of a TEC in a mobile device. In particular, FIG. **6**A illustrates an exemplary implementation **600** of a TEC using the Peltier effect. In FIG. **6**A, the TEC implementation **600** in a mobile device includes an outer portion **610** representing an outer shell of a mobile device. The outer portion **610** includes a TEC **612** that corresponds with the TEC **310** of FIG. **3** using the Peltier effect. TEC **612** may have two junctions including Junction A **614** and Junction B **616**. Junction A **614** of the TEC **612** is located on one side of the TEC **612** contacting a skin layer **618**. Junction B **616** of the TEC **612** is located on an opposite side of the TEC **612** contacting a core layer **620**. The skin layer **618** faces an exterior of the mobile device, and may include a touch screen display and/or a cover of the mobile device. The skin layer **618** has a temperature sensor **622** to measure a skin temperature. The core layer **620** faces an inner portion **630** of the mobile device, and thus faces an interior of the mobile device. The core layer **620** may include, for example, a thermal solution layer to dissipate heat from Junction B **616** of the TEC **612**. The core layer **620** may be an optional component if there is a separate thermal solution to dissipate heat from Junction B **616** of the TEC **612**. The TEC **612** utilizes the Peltier effect and is connected to a battery **634** via a power connection **624** to supply power to the TEC **612**. The TEC **612** uses power (e.g., direct current power) to move heat from Junction A **614** of the TEC **614** to Junction B **616** of the TEC **616**. That is, when the power is applied to the TEC **612**, the heat is carried from one side (e.g., Junction A **614**) to other side (e.g., Junction B **616**) of the TEC **612** by electron transport. The thermal solution layer may be a custom designed light weight thermal solution and may be made of at least one of a copper heat spreader, an aluminum heat spreader, a carbon heat plate, or PCM, for example. The TEC **612**, the skin layer **618**, and the core layer **620** are included in the outer portion **610** of the mobile device. The inner portion **630** of the mobile device may include at least a die **632** and a battery **634**.

[0044] As discussed supra, when power is supplied to the TEC utilizing the Peltier effect, one junction of the TEC is cooled while another junction of the TEC is heated as heat is pumped from one side to another side of TEC by electron transport, depending on a direction of the current applied. Thus, in one configuration where Junction A **614** corresponds with the first junction **318** of FIG. **3** and Junction B **616** corresponds with the second junction **324** of FIG. **3**, Junction A **614** is cooled while Junction B **616** is heated when the battery **634** supplies power to the TEC **612**. Hence, the TEC **612** utilizing the Peltier effect can be used to cool Junction A **614** and pump heat to Junction B **616** of the TEC **612**.

[0045] As the die **632** performs mobile device tasks, die temperature rises, causing temperatures of various portions of the mobile device **800** to increase. For example, the increase

in the die temperature may cause the skin temperature sensed via the temperature sensor **618** to increase. When the skin temperature sensed via the temperature sensor **618** rises above the threshold temperature (e.g., 40~45° C.), the TEC **612** utilizing the Peltier effect can be powered (e.g., via the battery **632**) to cool one side of the TEC **612** corresponding to Junction A **614** that contacts the skin layer **618** to lower the skin temperature of the skin layer **618**, thereby maintaining the skin temperature at the threshold temperature (e.g., 40~45° C.) or below. While the TEC **612** is powered, the other side of the TEC **612** corresponding to Junction B **616** is heated. The heat from the temperature increase at Junction B **616** may also be cooled with the thermal solution included in the core layer **620**. The die temperature may reach the maximum allowable die temperature limit of the die **632** while maintaining a desired skin temperature at the skin layer **618**. That is, the die temperature is allowed to reach maximum allowable temperature while the skin temperature is maintained at 45° C.

[0046] As discussed supra, the allowable die temperature limit in conventional mobile devices is 105~125° C. Therefore, the TEC **612** is powered to cool the skin layer **618** and to maintain the skin temperature of the skin layer **618** at the threshold temperature (e.g., 40~45° C.) or below, while the temperature at Junction B **616** and the inner portion **630** increases due to the heat from Junction B **616** and an increase in the die temperature. That is, because the TEC **612** is used to maintain the skin temperature of the skin layer **618** at the threshold temperature (e.g., 40~45° C.) or below, the die **632** can perform at a high level that causes the die temperature to rise above a conventional mitigation temperature of 70~85° C. Further, the die **632** may have its own independent cooling component such as a die thermal solution **636** to cool the die **632**. The die thermal solution **632** may include at least one of a vapor chamber, a heat pipe or PCM.

[0047] FIG. **6**B illustrates an exemplary implementation **640** of a TEC that corresponds with the TEC **410** of FIG. **4** utilizing the Seebeck effect. In FIG. **6**B, the TEC **652** may have two junctions including Junction A **654** and Junction B **656**. Junction A **654** of the TEC **652** is located on one side of the TEC **652** facing the inner portion **630** and Junction B **656** of the TEC **652** is located on an opposite side of the TEC **652** contacting a core layer **660**. The skin layer **658** faces an exterior of the mobile device and is located on the core layer **660**. The skin layer **658** may include a touch screen display or a cover. The core layer **660** is located between the skin layer **658** and the TEC **652**. The core layer **660** may include, for example, a thermal solution layer to dissipate heat at Junction B **656**. The thermal solution layer may be a custom designed light weight thermal solution and may be made of at least one of a copper heat spreader, an aluminum heat spreader, a carbon heat plate, or PCM, for example. The TEC **652**, the skin layer **658** and the core layer **660** are included in the outer portion **650** of the mobile device. The inner portion **630** of the mobile device may include at least a die **632** and a battery **634**. The die **632** may also have the die thermal solution **636** located on the die **632** to cool the die **632**. The battery is connected to the TEC **652** via a power storage connection **662**. When there is a temperature difference across the TEC **652** between Junction A **654** and Junction B **656**, a power may be generated at the TEC **652** due to the Seebeck effect. The generated power may be stored in the battery **634** or may be supplied directly to other components of the mobile device. More specifically, in a first configuration where Junction A **654** corresponds with the first junction **418** of FIG. **4** and Junction B **656** corresponds with the second junction **424** of FIG. **4**, power with positive voltage is generated when Junction A **654** has a higher temperature than Junction B **656** and power with negative voltage is generated when Junction B **656** has a higher temperature than Junction A **654**. In a second configuration where Junction A **654** corresponds with the second junction **424** of FIG. **4** and Junction B **656** corresponds with the second junction **418** of FIG. **4**, power with positive voltage is generated when Junction B **656** has a higher temperature than Junction A **654** and power with negative voltage is generated when Junction A **656** has a higher temperature than Junction A **654**.

[0048] In an aspect, when the temperature of the inner portion of the mobile device is higher than the skin temperature when the die is performing, the TEC utilizing the Seebeck effect can be used to generate power with the temperature difference between the inner portion and the skin portion of the mobile device. In another aspect, when the display device operates at a high resolution, the display generates heat, and thus the skin side may have a higher temperature than the die portion of the mobile device. The TEC utilizing the Seebeck effect can then be used to generate power using the temperature difference. The generated power may be used to supply power to components or a battery, which can contribute to longer battery life.

[0049] FIG. **6**C illustrates an exemplary implementation **670** of a TEC that corresponds to a combination of uses of the TEC **310** of FIG. **3** using the Peltier effect and the TEC **410** of FIG. **4** using the Seebeck effect. In FIG. **6**C, the TEC implementation **670** in a mobile device includes an outer portion **680** representing an outer shell of a mobile device. The outer portion **680** includes a TEC **682** that is used for the Peltier effect of the TEC **310** of FIG. **3** and for the Seebeck effect of the TEC **410** of FIG. **4**. TEC **682** may have two junctions including Junction A **684** and Junction B **686**. Junction A **684** of the TEC **682** is located on one side of the TEC **682** contacting a skin layer **688** and Junction B **686** of the TEC **682** is located on an opposite side of the TEC **682** contacting a core layer **690**. The skin layer **688** faces an exterior of the mobile device, and may include a touch screen display and/or a cover of the mobile device. The skin layer **688** has a temperature sensor **692** to measure a skin temperature. The core layer **690** faces an inner portion **630** of the mobile device, and thus faces an interior of the mobile device. The core layer **690** may include, for example, a thermal solution layer to dissipate heat from Junction B **686** of the TEC **682**. The core layer **690** may be an optional component, especially if there is a separate thermal solution to cool Junction B **686** of the TEC **682**. The TEC **682**, the skin layer **688** and the core layer **690** are included in the outer portion **680** of the mobile device. The inner portion **630** of the mobile device may include at least a die **632** and a battery **634**. The die **632** may also have the die thermal solution **636** located on the die **632** to dissipate heat from the die **632**. The battery **634** is connected to the TEC **682** via a power connection **694** to supply power to the TEC **612** and via a power storage connection **696** to supply power to the battery **634**.

[0050] When the skin temperature sensed via the temperature sensor **692** is equal to or less than the threshold temperature, the TEC **682** is used for the Seebeck effect to generate power via a temperature difference between Junction A **684** and Junction B **686**. The generated power may be stored in the battery **634** via the power storage connection **696** or may be

supplied directly to other components of the mobile device. More specifically, in a configuration where Junction A **684** corresponds with the first junction **418** of FIG. **4** and Junction B **686** corresponds with the second junction **424** of FIG. **4**, power with positive voltage is generated when Junction A **684** has a higher temperature than Junction B **686** and power with negative voltage is generated when Junction B **686** has a higher temperature than Junction A **684**. On the other hand, when the skin temperature sensed via the temperature sensor **692** is greater than the threshold temperature (e.g., 40~45° C.), the TEC **682** utilizing the Peltier effect can be powered (e.g., via the battery **634** and the power connection **694**) to cool one side of the TEC **682** corresponding to Junction A **684** that contacts the skin layer **688** to lower the skin temperature of the skin layer **688**, thereby maintaining the skin temperature at the threshold temperature or below. While the TEC **682** is powered, the other side of the TEC **682** corresponding to Junction B **686** is heated. The die temperature may reach close to the maximum allowable die temperature limit while maintaining the desired skin temperature using the TEC **682**.

[0051] In another configuration of the exemplary implementation **670** of FIG. **6**C, the TEC **682** may include two or more separate TECs. The TEC **682** may include a first TEC on the left side of the TEC **682** corresponding to the location of the die **632**, and a second TEC on the right side of the TEC **682** corresponding to the location of the battery **634**. In a first example, the first TEC on the left side may utilize both the Peltier effect and the Seebeck effect and thus may be connected to the power connection **694** and the power storage connection **696**. In the first example, the second TEC on the right side of the TEC **682** may utilize only the Seebeck effect, and thus may be connected only with the power storage connection **696**. In a second example, the first TEC on the left side may utilize only the Seebeck effect, and thus may be connected only with the power storage connection **696**. In the second example, the second TEC on the right side may utilize both the Peltier effect and the Seebeck effect and thus may be connected to the power connection **694** and the power storage connection **696**.

[0052] It is noted that any combinations of FIGS. **6**A-**6**C may be implemented in a mobile device. For example, a mobile device may implement the outer portion **610** of FIG. **6**A at one side of the mobile device and further provide an additional implementation of the outer portion **610** of FIG. **6**A at another side of the mobile device, to provide two TECs utilizing the Peltier effect on different sides of the mobile device. As another example, a mobile device may implement the outer portion **610** of FIG. **6**A at one side of the mobile device to provide a TEC utilizing the Peltier effect and further implement the outer portion **650** of FIG. **6**B at another side of the mobile device to provide a TEC utilizing the Seebeck effect. As another example, a mobile device may implement the outer portion **680** of FIG. **6**C at one side of the mobile device to provide a TEC using both the Peltier effect and the Seebeck effect, and further provide one or more of the outer portion **610** of FIG. **6**A and the outer portion **650** of FIG. **6**B at another side of the mobile device. Examples illustrating implementations of the features of FIGS. **6**A-**6**B are provided infra.

[0053] FIG. **7** illustrates a closed-loop temperature control system **700** using a TEC according to an embodiment. A temperature sensor **702** senses a temperature near a first junction of a TEC **704**. The sensed temperature from the temperature sensor **702** is sent to a temperature control module **706**. The temperature module **706** computes a temperature difference value by subtracting a threshold temperature from the sensed temperature. The threshold temperature is set to an allowable temperature limit (e.g., 40~45° C.) for a mobile device skin. The temperature difference value is sent from the temperature control module **706** to a power supply controller **708**. If the temperature difference value is less than or equal to zero, the power supply controller **708** controls so that power is not supplied to the TEC **704**. If the temperature difference value is greater than zero, the power supply controller **708** controls to supply power to the TEC **704** utilizing the Peltier effect to cool a portion near a first junction of the TEC **704** while heating a portion near a second junction of the TEC **704**. As the TEC **704** cools the portion near the first junction of the TEC **704**, the sensor **702** senses a lowered temperature near the first junction. If the cooling by the TEC **704** causes the temperature near the first junction to decrease to the threshold temperature or below, the difference value computed at the temperature module **706** becomes zero or below zero. If the power supply controller **708** receives the computed difference value of zero or below zero, the power supply controller **708** controls to stop supplying power to the TEC **704**, thereby stopping the cooling process by the TEC **704** using the Peltier effect.

[0054] Hence, the TEC utilizing the Peltier effect can be used at a mobile device skin near a display (e.g., touch screen) side and/or back cover side to cool the skin and maintain the skin temperature at the threshold temperature (e.g., 40~45° C.) by using the temperature control loop discussed supra. That is, when the sensor **702** determines that the skin temperature is above the threshold temperature, the controller **708** powers the TEC **704** utilizing the Peltier effect to cool the skin. When the skin temperature is not greater than the threshold temperature, the controller **708** deactivates the TEC **704** utilizing the Peltier effect. Because the skin temperature can be maintained at the threshold temperature (e.g., 40~45° C.) via the cooling effect of the TEC **704**, the die temperature may be allowed to increase above a conventional mitigation temperature (e.g., 70~85° C.) and reach the allowable limit (e.g., 105~125° C.) of the die temperature, which enables the die to perform at a higher level than a conventional mobile device.

[0055] In addition, at least one of a die temperature, PMIC power output, or a PMIC temperature may be considered in determining whether to power the TEC **704**. For example, a die temperature sensor may be embedded in the die to sense the die temperature, and a PMIC temperature sensor may be embedded in the PMIC to measure the PMIC temperature. The correlation between the skin temperature and at least one of the die temperature, the PMIC power output, or the PMIC temperature may be determined during a development stage of the mobile device. In particular, during the development stage, for each of various use cases (e.g., a CPU intensive case, a graphic intensive case, etc.), at least one of the die temperature, the PMIC power output, or the PMIC temperature may be determined and correlated with a corresponding skin temperature measured by a sensor.

[0056] Therefore, a database including information about relationship between a device skin temperature and its corresponding die temperature, PMIC power output, and PMIC temperature may be built and stored in the mobile device. Then, the mobile device being used by a user may measure at least one of the measured die temperature, PMIC power output, or PMIC temperature, and then estimate the skin temperature based on the measured values and the correlation in

the database, without using the skin temperature sensor. FIGS. **8-12** illustrate various embodiments of uses of one or more TECs in a mobile device. FIGS. **8-12** show a cross sectional view similar to a cross section I2 of FIG. **1**A. Thus, several of components illustrated in FIGS. **8-12** are similar to the components illustrated in FIG. **2**B.

[0057] FIG. **8** is a diagram illustrating a cross section of a mobile device including a TEC according to one embodiment. According to FIG. **8**, the mobile device **800** has a front portion **810** and a back portion **830**, and an inside portion **850** located between the front portion **810** and the back portion **830** of the mobile device **800**. The front portion **810** includes a front TEC **812** and a touch screen display **814**. The touch screen display **814** is similar to the touch screen display **212** of FIG. **2**B that includes a touch screen **214** located on a display stack **216**. The front portion **810** includes a front thin heat spreader plate **816** located between the touch screen display **814** and the front TEC **812** to spread heat. The front portion **810** includes a front thermal solution layer **818** located on the front TEC **812** and facing the inside portion **850**. The front thin heat spreader plate **816** may be made of copper or aluminum, and the front thermal solution layer **818** may be made of at least one of a copper heat spreader, an aluminum heat spreader, a carbon heat spreader, or PCM, for example. A front temperature sensor **820** is included in the front portion **810** to sense a front skin temperature at the touch screen display **814**. The front temperature sensor can be placed on a hot spot area of the touch screen display **814**, where the hot spot area corresponds with the location of the die **854** and thus is hotter than other areas of the touch screen display **814**. The back portion **830** includes a back cover **832** and a back graphite layer **834** located on the back cover **832** to dissipate heat. The inside portion **850** includes a printed circuit board (PCB) **852** having a die **854** and electrical components **858** located thereon. A die thermal interface material portion (TIM) **856** is provided on the die **854**. A component TIM **859** is provided on the electrical components **858** and may contact the back graphite layer **834**. The inside portion **850** includes a battery **860** to supply power to the mobile device **800**. It is noted that the die **854** may have its own die thermal solution **862** to dissipate heat from the die **854**. The die thermal solution **862** may include at least one of a heat pipe, a vapor chamber, or PCM.

[0058] As the mobile device **800** utilizes the die **854** to perform various tasks of the mobile device **800**, the die temperature rises, which causes temperatures of various portions of the mobile device **800** to increase. Thus, with the increase in the die temperature, the front skin temperature sensed by the front temperature sensor **820** rises. The touch screen display **814** providing a high resolution may also generate heat that additionally contributes to the rise in the front skin temperature. When the front skin temperature is greater than a threshold temperature (e.g., 40~45° C.), the mobile device **800** supplies power from the battery **860** to the front TEC **812** through a power connection **826** in order to cool Junction A **822** of the front TEC **812** facing toward the touch screen display **814**. While Junction A **822** is cooled, Junction B **824** of the front TEC **812** facing toward the front thermal solution layer **818** and the die **854** is heated. Thus, the front skin portion including the touch screen display **814** is cooled via Junction A **822** of the front TEC **812** until the mobile device **800** determines that the front temperature sensed by the front temperature sensor **820** is less than or equal to the threshold temperature. The cooling of the front skin portion via the front TEC **812** allows the front temperature at the touch screen display **814** to be maintained at the threshold temperature or below. An inside temperature of the inside portion **850** increases due to an increased die temperature and the heating of Junction B **824** while the front TEC **812** is activated. However, the increase in the inside temperature does not affect the die performance since the allowable die temperature limit for reliable performance is much higher (e.g., 105~125° C.) than the threshold temperature (e.g., 40~45° C.). While power is supplied to the front TEC **812**, the heat from the heated Junction B **824** may be dissipated via the front thermal solution layer **818**. The heat from the inside portion **850** may further be dissipated via the die thermal solution **862**.

[0059] FIG. **9** is a diagram illustrating a cross section of a mobile device including a TEC according to another embodiment. According to FIG. **9**, the mobile device **900** has a front portion **910** and a back portion **930**. The mobile device **900** has an inside portion **950** that is located between the front portion **910** and the back portion **930** of the mobile device **800**. The front portion **910** includes a touch screen display **814** that is located on a front graphite layer **916** for dissipating heat. The back portion **930** includes a back TEC **932** and a back cover **832**. The back portion **930** includes a back heat spreader plate **933** located between the back cover **832** and a back TEC **932** to spread heat. The back portion **930** includes a back thermal solution layer **935** located on the back TEC **932** and facing the inside portion **950**. The back thin heat spreader plate **933** may be made of copper or aluminum, and the back thermal solution layer **935** may be made of at least one of a copper heat spreader, an aluminum heat spreader, a carbon heat spreader, or PCM, for example. The temperature sensor **934** is included in the back portion **930** to sense a back side skin temperature at the back cover **832**. The die **854** may have its own die thermal solution **862** to dissipate heat from the die **854**.

[0060] When the die temperature of the die **854** increases while the die **854** performs various tasks of the mobile device **900**, the back side skin temperature sensed by the back side temperature sensor **934** rises. When the back side skin temperature is greater than a threshold temperature (e.g., 40~45° C.), the mobile device **900** supplies power from the battery **860** to the back TEC **932** through a power connection **940** in order to cool Junction A **936** of the back TEC **932** facing toward the back cover **832** while heating Junction B **938** of the back TEC **932** facing toward the back thermal solution layer **935** and the die **854**. Thus, the back side skin portion including the back cover **832** is cooled via Junction A **936** of the back TEC **932** until the mobile device **900** determines that the back side skin temperature sensed by the back side temperature sensor **934** is less than or equal to the threshold temperature. The cooling of the back side skin portion via the back TEC **932** allows the temperature at the back cover **934** to be maintained at the threshold temperature or below. An inside temperature of the inside portion **950** increases due to a increased die temperature and the heating of Junction B **938** while the back TEC **932** is activated. However, the increase in the inside temperature does not affect the die performance since the allowable die temperature limit for reliable performance is much higher (e.g., 105~125° C.) than the threshold temperature. While power is supplied to the back TEC **932**, the heat from the heated Junction B **938** is cooled via the back thermal solution layer **935**. The heat from the inside portion

950 may further be dissipated via the independent thermal solution on top of the die 862 and the front graphite 916.

[0061] FIG. 10 is a diagram illustrating a cross section of a mobile device including two TECs according to an embodiment. According to FIG. 10, the mobile device 1000 has a front portion 1010 and a back portion 1030, and an inside portion 950 located between the front portion 1010 and the back portion 1030 of the mobile device 1000. The front portion 1010 includes a front thin heat spreader plate 816 located between a touch screen display 814 and a front TEC 812 to spread heat. The front portion 1010 includes a front thermal solution layer 818 located on the front TEC 812 and facing the inside portion 950. A front temperature sensor 820 is included in the front portion 1010 to sense a front skin temperature at the touch screen display 814. The back portion 1030 includes a back heat spreader plate 933 located between the back cover 832 and a back TEC 932 to spread heat. The back portion 1030 includes a back thermal solution layer 935 located on the back TEC 932 and facing the inside portion 950. A back temperature sensor 934 is included in the back portion 1030 to sense a back side skin temperature at the back cover 832. The back portion 1030 includes a back thermal solution layer 935 located on the back heat spreader plate 933 and facing the inside portion 950.

[0062] It is noted that the mobile device 1000 is a combination of the TEC implementation at the front portion 810 of the mobile device 800 of FIG. 8 and the TEC implementation at the back portion 930 of the mobile device 900 of FIG. 9. Therefore, the front portion 1010 of the mobile device 1000 is the same as the front portion 810 of the mobile device 800 of FIG. 8, and the back portion 1030 of the mobile device 1000 is the same as the back portion 910 of the mobile device 900 of FIG. 9. In summary, when the front skin temperature is greater than a threshold temperature (e.g., 40~45° C.), the front TEC 812 is powered to cool Junction A 822 of the front TEC 812, and when the back side skin temperature is greater than the threshold temperature (e.g., 40~45° C.), the back TEC 932 is powered to cool Junction A 936 of the back TEC 932. Because the TEC operations utilizing the Peltier effect and the structures of the front portion 1010 and the back portion 1030 are respectively the same as the TEC operations and the structures of the front portion 810 of FIG. 8 and the back portion 930 of FIG. 9 that are discussed supra, discussions of the TEC operations and the structures of the front portion 1010 and the back portion 1030 are omitted for brevity.

[0063] An alternative approach may be utilized to maintain the skin temperature in the mobile device 1000. The alternative approach implements the back TEC 932 such that the back TEC 932 may be powered to cool Junction B 938 and to heat Junction A 936. Further, the alternative approach implements the front TEC 812 such that the front TEC 812 may be powered to cool Junction B 824 and to heat Junction A 822. In particular, when the front skin temperature sensed by the front temperature sensor 820 is greater than the threshold temperature, the back TEC 932 may be powered to cool Junction B 938 of the back TEC 932. In a mobile device structure where mobile device components are connected from the front side 1010 to the back side 1030, as Junction B 938 of the back TEC 932 is cooled, heat from the front portion 1010 and the inside portion 950 flows toward the back portion 1030 through the mobile device components, thereby lowering the front skin temperature. When the front side skin temperature decreases to the threshold temperature or below, power is no longer supplied to the back TEC 932 in order to stop cooling Junction B 938 of the back TEC 932. Similarly, when the back side skin temperature is greater than the threshold temperature, the front TEC 812 may be powered to cool Junction B 824 of the front TEC 812. As Junction B 824 of the front TEC 812 is cooled, heat from the back portion 1030 flows toward the front portion 1010 through the mobile device components, thereby lowering the back side skin temperature. When the back side skin temperature decreases to the threshold temperature or below, power is cut off from the front TEC 812 to stop cooling Junction B 824 of the front TEC 812. In the alternative approach, one of the front TEC 812 and the back TEC 932 may be powered at a time until a desired temperature (e.g., a temperature equal to or less than the threshold temperature) is achieved for the front skin temperature and the back side skin temperature.

[0064] FIG. 11 is a diagram illustrating a cross section of a mobile device including two

[0065] TECs according to another embodiment. According to FIG. 10, the mobile device 1100 has a front portion 1110 and a back portion 1130, and an inside portion 850 located between the front portion 1110 and the back portion 1130 of the mobile device 800. The front portion 1110 includes a front thin heat spreader plate 816 located between a touch screen display 814 and a front TEC 812 to spread heat. The front portion 1110 includes a front thermal solution layer 818 located on the front TEC 812 and facing the inside portion 850. A front temperature sensor 820 is included in the front portion 1110 to sense a front skin temperature at the touch screen display 814. The back portion 1130 includes a back heat spreader plate 933 located between the back cover 832 and a back TEC 1132 to spread heat. The component TIM 859 on the components 858 in the inside portion 850 may contact the back TEC 1132.

[0066] It is noted that the TEC operation utilizing the Peltier effect and the structure of the front portion 1110 of the mobile device 1100 is the same as the TEC operation and the structure of the front portion 810 of the mobile device 800 of FIG. 8. Thus, discussions of the TEC operation and the structure of the front portion 1110 of the mobile device 1100 is omitted for brevity.

[0067] At the back portion 1130, the back TEC 1132 uses the Seebeck effect to generate power when there is a temperature difference between Junction A 1134 and Junction B 1136. In a first configuration, Junction A 1134 and Junction B 1136 may be equivalent to the first junction 418 and the second junction 424, respectively, as illustrated in FIG. 4. Thus, power with positive voltage is generated when a temperature at Junction A 1134 is higher than a temperature at Junction B 1136 and power with negative voltage is generated when a temperature at Junction B 1136 is higher than a temperature at Junction A 1134. For example, when the die temperature of the die 854 increases, the temperature of the inside portion 850 increases, and thus the temperature of Junction A 1134 facing the inside portion 850 increases. With the increased temperature at Junction A 1134, the temperature at Junction A 1134 becomes higher than the temperature at Junction B 1136. Consequently, power with positive voltage is generated due to the temperature difference between Junction A 1134 and Junction B 1136. On the other hand, a second configuration may be implemented instead of the first configuration, such that Junction A 1134 and Junction B 1136 in the second configuration are equivalent to the second junction 424 and the first junction 424 of FIG. 4, respectively. Thus, in

the second configuration, power with positive voltage is generated when Junction B **1136** has a higher temperature than Junction A **1134** and power with negative voltage is generated when Junction A **1134** has a higher temperature than Junction B **1136**. The back TEC **1132** utilizing the Seebeck effect generates power with a temperature difference between Junction A **1134** and Junction B **1136**. The power generated by the back TEC **1132** may be stored in the battery **860** via a power storage connection **1034** and/or may be provided directly to various components of the mobile device **1100**.

[0068] FIG. **12** is a diagram illustrating a cross section of a mobile device including a TEC according to another embodiment. According to FIG. **12**, the mobile device **1200** has a front portion **1210** and a back portion **1230**, and an inside portion **850** located between the front portion **1210** and the back portion **1230** of the mobile device **1200**. The front portion **1210** includes a front TEC **1212** and a touch screen display **814**. The front portion **1210** includes a front thin heat spreader plate **816** located between the touch screen display **814** and the front TEC **1212** to spread heat. The front portion **1210** includes a front thermal solution layer **818** located on the front TEC **1212** and facing the inside portion **850**. A front temperature sensor **820** is included in the front portion **1210** to sense a front skin temperature at the touch screen display **814**. The back portion **1230** includes a back cover **832** and a back graphite layer **834** located on the back cover **832** to dissipate heat. The inside portion **850** includes a printed circuit board (PCB) **852** having a die **854** and electrical components **858** located thereon. A die thermal interface material portion (TIM) **856** is provided on the die **854**. A component TIM **859** is provided on the electrical components **858** and may contact the back graphite layer **834**. The inside portion **850** includes a battery **860** to supply power to the mobile device **1200**. The die **854** may have its own die thermal solution **862** to dissipate heat from the die **854**.

[0069] In the mobile device **1200**, the front TEC **1212** utilizes the Peltier effect when the front skin temperature sensed by the front temperature sensor **820** is greater than a threshold temperature. The front TEC **1212** utilizes the Seebeck effect when the front skin temperature sensed by the front temperature sensor **820** is equal to or less than the threshold temperature (e.g., 40~45° C.). In particular, when the front skin temperature is equal to or less than the threshold temperature, the front TEC **1212** utilizes the Seebeck effect to generate power via a temperature difference between Junction A **1214** and Junction B **1216**. In one configuration, Junction A **1214** and Junction B **1216** may be equivalent to the first junction **418** and the second junction **424** of FIG. **4**, respectively, utilizing the Seebeck effect. Thus, when Junction A **1214** has a higher temperature than Junction B **1216**, the front TEC **1212** may be used to generate positive power via the temperature difference between Junction A and Junction B. For example, Junction A **1214** may have a higher temperature than Junction B **1216** when the touch screen display **814** generates heat from displaying high resolution images, causing Junction A **1214** to become warmer than Junction B **1216**. Further, when Junction B **1216** has a higher temperature than Junction A **1214**, the front TEC **1212** may be used to generate negative power via the temperature difference between Junction A and Junction B. For example, Junction B **1216** may have a higher temperature than Junction A **1216** when an increase in the temperature of the die **854** increase the temperature of the inside portion **850**. The power generated by the front TEC **1212** via the temperature difference Junction A and Junction B may be stored in the battery **860** via a power storage connection **828** and/or may be provided directly to various components of the mobile device **1200**.

[0070] When the die temperature of the die **854** increases as the die **854** is used for various tasks of the mobile device **1200**, temperatures of various portions of the mobile device **1200** also increase. Thus, with the increase in the die temperature, the front skin temperature sensed by the front temperature sensor **820** rises. When the front skin temperature is greater than the threshold temperature (e.g., 40~45° C.), the mobile device **1200** supplies power from the battery **860** to the front TEC **1212** through a power connection **826** in order to cool Junction A **1214** of the front TEC **1212** facing toward the touch screen display **814** while heating Junction B **1216** of the front TEC **1212** facing toward the front thermal solution layer **818** and the die **854**. The front skin portion including the touch screen display **814** is cooled via Junction A **1214** of the front TEC **1212** until the mobile device **1200** determines that the front temperature sensed by the front temperature sensor **820** is less than or equal to the threshold temperature. The cooling of the front skin portion via the front TEC **1212** allows the front temperature at the touch screen display **814** to be maintained at the threshold temperature or below. An inside temperature of the inside portion **850** increases due to a increased die temperature and the heating of Junction B **1216** while the front TEC **1212** is activated. However, the increase in the inside temperature does not affect the die performance because the allowable die temperature limit for reliable performance is much higher (e.g., 105~125° C.) than the device skin threshold temperature limit. While power is supplied to the TEC, the heat from the heated Junction B **1216** may be dissipated via the front thermal solution layer **818**. The heat from the inside portion **850** may further be dissipated via the graphite layer **834** and the die thermal solution **862** on top of the die.

[0071] In another configuration, the TEC **1212** may include two or more separate TECs. The TEC **1212** may include a first TEC on the left side of the TEC **1212** corresponding to the location of the die **854**, and a second TEC on the right side of the TEC **1212** corresponding to the location of the battery **860**. In one example, the first TEC on the left side may utilize both the Peltier effect and the Seebeck effect and thus may be connected to the power connection **826** and the power storage connection **828**. In the first example, the second TEC on the right side of the TEC **1212** may utilize only the Seebeck effect, and thus may be connected only with the power storage connection **828**. In a second example, the first TEC on the left side may utilize only the Seebeck effect, and thus may be connected only with the power storage connection **828**. In the second example, the second TEC on the right side may utilize both the Peltier effect and the Seebeck effect and thus may be connected to the power connection **826** and the power storage connection **828**.

[0072] FIG. **13** is a diagram illustrating a cross section of a mobile device including two TECs according to another embodiment. According to FIG. **13**, the mobile device **1300** has a front portion **1310** and a back portion **1330**, and an inside portion **850** located between the front portion **1310** and the back portion **1330** of the mobile device **1300**. The front portion **1310** includes a front TEC **1212** and a touch screen display **814**. The front portion **1310** includes a front thin heat spreader plate **816** located between the touch screen display **814** and the front TEC **1212** to spread heat. The front portion **1310** includes a front thermal solution layer **818** located on

the front TEC **1212** and facing the inside portion **850**. A front temperature sensor **820** is included in the front portion **1310** to sense a front skin temperature at the touch screen display **814**. The back portion **1330** includes a back heat spreader plate **933** located between the back cover **832** and a back TEC **1132** to spread heat.

[0073] It is noted that the TEC operation utilizing the Peltier effect and the Seebeck effect and the structure of the front portion **1310** of the mobile device **1300** is the same as the TEC operation and the structure of the front portion **1210** of the mobile device **1200** of FIG. **12**. Further, it is also noted that the TEC operation utilizing the Seebeck effect and the structure of the back portion **1330** of the mobile device **1300** is the same as the TEC operation and the structure of the back portion **1130** of the mobile device **1100** of FIG. **11**. Thus, discussions of the TEC operations and the structures of the front portion **1310** and the back portion **1330** of the mobile device **1300** are omitted for brevity.

[0074] FIG. **14**A is a flow chart **1400** of a method of utilizing a thermoelectric cooler (TEC). FIG. **14**B is a flowchart **1450** of a method of utilizing a second TEC in addition to the TEC of FIG. **14**A. The methods may be performed by a mobile device. Referring to FIG. **14**A, at step **1402**, the mobile device obtains a skin temperature at a skin portion of the mobile device. In one configuration, the skin portion of the mobile device at which the skin temperature is measured may be at a display side of the mobile device. For example, referring back to FIGS. **8**, **10-13**, the mobile device may obtain the skin temperature at a display side at the touch screen display **814** via the front temperature sensor **820**. In an alternative configuration, the skin portion of the mobile device at which the skin temperature is measured may be at a non-display side of the mobile device. For example, referring back to FIGS. **9** and **10**, the mobile device may obtain the skin temperature at a non-display side at the back cover **822** via the back side temperature sensor **934**.

[0075] At step **1404**, the mobile device determines whether the skin temperature is greater than a threshold temperature. For example, referring back to FIG. **7**, the temperature module **706** computes a temperature difference value by subtracting the threshold temperature from the sensed skin temperature. The sensed skin temperature is greater than the threshold temperature if the temperature difference is greater than zero. The device skin threshold temperature may be approximately 40~45° C.

[0076] At step **1406**, if the skin temperature is greater than the threshold temperature, the mobile device provides power to a thermoelectric cooler (TEC) to cool a first side of the TEC while heating a second side of the TEC. For example, referring back to FIGS. **8**, **10-13**, if the skin temperature at the touch screen display **814** is greater than the threshold temperature, the mobile device provides power from the battery **860** to the front TEC **816** or the front TEC **1212** to cool Junction A of the front TEC **816** or the front TEC **1212** while heating Junction B of the front TEC **816** or the front TEC **1212**. As another example, referring back to FIGS. **9-10**, if the skin temperature at the back cover **832** is greater than the threshold temperature, the mobile device provides power from the battery **860** to the back TEC **932** to cool Junction A **936** of the back TEC **932** while heating Junction B **938** of the back TEC **932**.

[0077] The second side of the TEC may contact a thermal solution to cool heat from the second side of the TEC. For example, referring back to FIGS. **8** and **10-11**, the front TEC **816** contacts the first thermal solution layer **818** to cool heat generated from Junction B **824** of the front TEC **816**. As another example, referring back to FIGS. **12-13**, the front TEC **1212** contacts the first thermal solution layer **818** to cool heat generated from Junction B **1216** of the front TEC **1212**. As another example, referring back to FIGS. **9-10**, the back TEC **932** contacts the second thermal solution layer **935** to cool heat generated from Junction B **938** of the back TEC **932**. The thermal solution may be at least one of a copper heat spreader, an aluminum heat spreader, a, for example.

[0078] At step **1408**, if the skin temperature is not greater than the threshold temperature, the mobile device refrains from providing power to the TEC. Further, at step **1410**, if the skin temperature is not greater than the threshold temperature (e.g., if the determined skin temperature is equal to or less than the threshold temperature), the mobile device may generate power via a temperature difference between the first side and the second side of the thermoelectric cooler. For example, referring to FIGS. **12-13**, if the skin temperature sensed by the temperature sensor **820** is equal to or less than the threshold temperature, the mobile device may generate power via a temperature difference between the first junction **1214** and the second junction **1216** of the front TEC **1212**.

[0079] Referring to FIG. **14**B, the method of the flowchart **1450** may be performed in addition to the method of FIG. **14**A. At step **1452**, the mobile device may generate power via a temperature difference between a first side of a second TEC and a second side of the second TEC. The second TEC may be located opposite the TEC within the mobile device. For example, referring back to FIG. **11**, the mobile device may generate power via a temperature difference between Junction A **1134** and Junction B **1136** of the back TEC **1132** that is located at an opposing end from the front TEC **812**. At least one of the first side and the second side of the second TEC contacts a thermal solution. For example, referring back to FIG. **11**, Junction B **1136** of the back TEC **1132** contacts the thermal solution **836**. In one configuration, the first side of the second TEC contacts a second skin portion of the mobile device and the second side of the second TEC faces the core of the mobile device. For example, referring back to FIG. **11**, Junction A **1136** contacts the back cover **832** and Junction B **1134** faces the inside portion **850**. In another configuration, the first side of the second TEC faces the core of the mobile device and the second side of the second TEC contacts the second skin portion.

[0080] At step **1454**, the mobile device obtains a second skin temperature at a second skin portion of the mobile device. For example, referring back to FIG. **10**, the mobile device obtains the back side skin temperature at the back cover **832** via the temperature sensor **934**. At step **1456**, the mobile device determines whether the second skin temperature is greater than the threshold temperature. For example, referring back to FIG. **7**, the temperature module **706** computes a temperature difference value by subtracting the threshold temperature from the sensed skin temperature. The sensed skin temperature is greater than the threshold temperature if the temperature difference is greater than zero. At step **1458**, if the second skin temperature is greater than the threshold temperature, the mobile device provides power to the second TEC to cool a first side of the second TEC while heating a second side of the second TEC. For example, referring back to FIG. **10**, if the back side skin temperature sensed by the back side temperature sensor **934** is greater than the threshold temperature, the mobile device provides power to

the TEC **934** to cool Junction A **936** of the TEC **934** while heating Junction B **938** of the TEC **934**.

[0081] FIG. **15** is a conceptual data flow diagram **1500** illustrating the data flow between different modules/means/components in an exemplary apparatus **1502**. The apparatus may be a mobile device. The apparatus includes a temperature module **1504** that determines whether a skin temperature at a skin portion of a mobile device is greater than a threshold temperature. The first temperature sensor **1550** measures the skin temperature at the skin portion of the mobile device. The apparatus further includes a power supply control module **1506** that provides power to a TEC **1560** to cool a first side of the TEC **1560** while heating a second side of the TEC **1560** if the skin temperature is greater than the threshold temperature, wherein the first side of the TEC **1560** contacts the skin portion to cool the skin portion and the second side of the TEC **1560** faces a core of the mobile device. The power supply control module **1506** may refrain from providing power to the TEC **1560** when the skin temperature is determined to be equal to or less than the threshold temperature. The apparatus further includes a power generation control module **1508** that generates power via a temperature difference between the first side and the second side of the TEC **1560** if the determined skin temperature is equal to or less than the threshold temperature. The power generation control module **1508** may also generate power via a temperature difference between a first side of a second TEC **1570** and a second side of the second TEC **1570**, the second TEC **1570** being located at an opposite side from the TEC.

[0082] The temperature module **1504** may determine whether a second skin temperature at a second skin portion of the mobile device is greater than the threshold temperature. The second temperature sensor **1580** measures second skin temperature at the second skin portion of the mobile device. Then, the power supply control module **1506** may provide power to a second TEC **1570** to cool a first side of the second TEC **1570** while heating a second side of the second TEC **1570** if the second skin temperature is greater than the threshold temperature. The first side of the second TEC **1570** contacts the second skin portion to cool the second skin portion. The second side of the second TEC **1570** faces the core of the mobile device.

[0083] The apparatus may include additional modules that perform each of the steps of the algorithm in the aforementioned flow charts of FIGS. **14**A-**14**B. As such, each step in the aforementioned flow charts of FIGS. **14**A-**14**B may be performed by a module and the apparatus may include one or more of those modules. The modules may be one or more hardware components specifically configured to carry out the stated processes/algorithm, implemented by a processor configured to perform the stated processes/algorithm, stored within a computer-readable medium for implementation by a processor, or some combination thereof.

[0084] FIG. **16** is a diagram **1600** illustrating an example of a hardware implementation for an apparatus **1502'** employing a processing system **1614**. The processing system **1614** may be implemented with a bus architecture, represented generally by the bus **1624**. The bus **1624** may include any number of interconnecting buses and bridges depending on the specific application of the processing system **1614** and the overall design constraints. The bus **1624** links together various circuits including one or more processors and/or hardware modules, represented by the processor **1604**, the modules **1504**, **1506**, **1508**, **1550**, **1560**, **1570**, **1580**, and the computer-readable medium **1606**. The bus **1624** may also link various other circuits such as timing sources, peripherals, voltage regulators, and power management circuits, which are well known in the art, and therefore, will not be described any further.

[0085] The processing system **1614** may be coupled to a transceiver **1610**. The transceiver **1610** is coupled to one or more antennas **1620**. The transceiver **1610** provides a means for communicating with various other apparatus over a transmission medium. The transceiver **1610** receives a signal from the one or more antennas **1620**, extracts information from the received signal, and provides the extracted information to the processing system **1614**. In addition, the transceiver **1610** receives information from the processing system **1614**, and based on the received information, generates a signal to be applied to the one or more antennas **1620**. The processing system **1614** includes a processor **1604** coupled to a computer-readable medium **1606**. The processor **1604** is responsible for general processing, including the execution of software stored on the computer-readable medium **1606**. The software, when executed by the processor **1604**, causes the processing system **1614** to perform the various functions described supra for any particular apparatus. The computer-readable medium **1606** may also be used for storing data that is manipulated by the processor **1604** when executing software. The processing system further includes at least one of the modules **1504**, **1506**, **1508**, **1550**, **1560**, **1570**, and **1580**. The modules may be software modules running in the processor **1604**, resident/stored in the computer readable medium **1606**, one or more hardware modules coupled to the processor **1604**, or some combination thereof.

[0086] In one configuration, the apparatus **1502/1502'** for wireless communication includes means for determining whether a skin temperature at a skin portion of a mobile device is greater than a threshold temperature, and means for providing power to a TEC to cool a first side of a TEC while heating a second side of the TEC if the skin temperature is greater than the threshold temperature, wherein the first side of the TEC contacts the skin portion to cool the skin portion and the second side of the TEC faces a core of the mobile device. The apparatus **1502/1502'** may further include means for generating power via a temperature difference between the first side and the second side of the TEC if the determined skin temperature is equal to or less than the threshold temperature. The apparatus **1502/1502'** may further include means for refraining from providing power to the TEC when the skin temperature is determined to be equal to or less than the threshold temperature. The apparatus **1502/1502'** may further include means for determining whether a second skin temperature at a second skin portion of the mobile device is greater than the threshold temperature, and means for providing power to a second TEC to cool a first side of the second TEC while heating a second side of the second TEC if the second skin temperature is greater than the threshold temperature, wherein the first side of the second TEC contacts the second skin portion to cool the second skin portion and the second side of the second TEC faces the core of the mobile device. The apparatus **1502/1502'** may further include means for generating power via a temperature difference between a first side of a second TEC and a second side of the second TEC, the second TEC being located at an opposing side from the TEC.

[0087] It is understood that the specific order or hierarchy of steps in the processes disclosed is an illustration of exem-

plary approaches. Based upon design preferences, it is understood that the specific order or hierarchy of steps in the processes may be rearranged. Further, some steps may be combined or omitted. The accompanying method claims present elements of the various steps in a sample order, and are not meant to be limited to the specific order or hierarchy presented.

[0088] The previous description is provided to enable any person skilled in the art to practice the various aspects described herein. Various modifications to these aspects will be readily apparent to those skilled in the art, and the generic principles defined herein may be applied to other aspects. Thus, the claims are not intended to be limited to the aspects shown herein, but is to be accorded the full scope consistent with the language claims, wherein reference to an element in the singular is not intended to mean "one and only one" unless specifically so stated, but rather "one or more." The word "exemplary" is used herein to mean "serving as an example, instance, or illustration." Any aspect described herein as "exemplary" is not necessarily to be construed as preferred or advantageous over other aspects." Unless specifically stated otherwise, the term "some" refers to one or more. Combinations such as "at least one of A, B, or C," "at least one of A, B, and C," and "A, B, C, or any combination thereof" include any combination of A, B, and/or C, and may include multiples of A, multiples of B, or multiples of C. Specifically, combinations such as "at least one of A, B, or C," "at least one of A, B, and C," and "A, B, C, or any combination thereof" may be A only, B only, C only, A and B, A and C, B and C, or A and B and C, where any such combinations may contain one or more member or members of A, B, or C. All structural and functional equivalents to the elements of the various aspects described throughout this disclosure that are known or later come to be known to those of ordinary skill in the art are expressly incorporated herein by reference and are intended to be encompassed by the claims. Moreover, nothing disclosed herein is intended to be dedicated to the public regardless of whether such disclosure is explicitly recited in the claims. No claim element is to be construed as a means plus function unless the element is expressly recited using the phrase "means for."

What is claimed is:

1. A method comprising:

determining whether a skin temperature at a skin portion of a mobile device is greater than a threshold temperature; and

providing power to a thermoelectric cooler (TEC) to cool a first side of the TEC while heating a second side of the TEC if the skin temperature is greater than the threshold temperature, wherein the first side of the TEC contacts the skin portion to cool the skin portion and the second side of the TEC faces a core of the mobile device.

2. The method of claim **1**, further comprising:

generating power via a temperature difference between the first side and the second side of the TEC if the determined skin temperature is equal to or less than the threshold temperature.

3. The method of claim **2**, wherein the generated power is stored in a battery of the mobile device or is provided directly to components of the mobile device.

4. The method of claim **1**, further comprising:

refraining from providing power to the TEC when the skin temperature is determined to be equal to or less than the threshold temperature.

5. The method of claim **1**, wherein the second side of the TEC contacts a thermal solution to cool heat generated from the second side of the TEC.

6. The method of claim **5**, wherein the thermal solution comprises at least one of a copper heat spreader, an aluminum heat spreader, a carbon heat spreader, or phase change material (PCM).

7. The method of claim **1**, wherein the skin portion of the mobile device at which the skin temperature is measured is at a display side of the mobile device.

8. The method of claim **1**, wherein the skin portion of the mobile device at which the skin temperature is measured is at a non-display side of the mobile device.

9. The method of claim **1**, further comprising:

determining whether a second skin temperature at a second skin portion of the mobile device is greater than the threshold temperature;

providing power to a second TEC to cool a first side of the second TEC while heating a second side of the second TEC if the second skin temperature is greater than the threshold temperature, wherein the first side of the second TEC contacts the second skin portion to cool the second skin portion and the second side of the second TEC faces the core of the mobile device.

10. The method of claim **1**, further comprising:

generating power via a temperature difference between a first side of a second TEC and a second side of the second TEC, the second TEC being located at an opposing side from the TEC.

11. The method of claim **10**, wherein the first side of the second TEC contacts a second skin portion of the mobile device and the second side of the second TEC faces the core of the mobile device.

12. The method of claim **10**, wherein the first side of the second TEC faces the core of the mobile device and the second side of the second TEC contacts a second skin portion of the mobile device.

13. The method of claim **10**, wherein at least one of the first side and the second side of the second TEC contacts a thermal solution.

14. The method of claim **1**, wherein the skin temperature is determined based on at least one of a die temperature, a power management integrated circuit (PMIC) power output, or a PMIC temperature.

15. An apparatus comprising:

means for determining whether a skin temperature at a skin portion of a mobile device is greater than a threshold temperature; and

means for providing power to a thermoelectric cooler (TEC) to cool a first side of the TEC while heating a second side of the TEC if the skin temperature is greater than the threshold temperature, wherein the first side of the TEC contacts the skin portion to cool the skin portion and the second side of the TEC faces a core of the mobile device.

16. The apparatus of claim **15**, further comprising:

means for generating power via a temperature difference between the first side and the second side of the TEC if the determined skin temperature is equal to or less than the threshold temperature.

17. The apparatus of claim **16**, wherein the generated power is stored in a battery of the mobile device or is provided directly to components of the mobile device.

18. The apparatus of claim 15, further comprising:

means for refraining from providing power to the TEC when the skin temperature is determined to be equal to or less than the threshold temperature.

19. The apparatus of claim 15, wherein the second side of the TEC contacts a thermal solution to cool heat generated from the second side of the TEC.

20. The apparatus of claim 19, wherein the thermal solution comprises at least one of a copper heat spreader, an aluminum heat spreader, a carbon heat spreader, or phase change material (PCM).

21. The apparatus of claim 15, wherein the skin portion of the mobile device at which the skin temperature is measured is at a display side of the mobile device.

22. The apparatus of claim 15, wherein the skin portion of the mobile device at which the skin temperature is measured is at a non-display side of the mobile device.

23. The apparatus of claim 15, further comprising:

means for determining whether a second skin temperature at a second skin portion of the mobile device is greater than the threshold temperature;

means for providing power to a second TEC to cool a first side of the second TEC while heating a second side of the second TEC if the second skin temperature is greater than the threshold temperature, wherein the first side of the second TEC contacts the second skin portion to cool the second skin portion and the second side of the second TEC faces the core of the mobile device.

24. The apparatus of claim 15, further comprising:

means for generating power via a temperature difference between a first side of a second TEC and a second side of the second TEC, the second TEC being located at an opposing side from the TEC.

25. The apparatus of claim 24, wherein the first side of the second TEC contacts a second skin portion of the mobile device and the second side of the second TEC faces the core of the mobile device.

26. The apparatus of claim 24, wherein the first side of the second TEC faces the core of the mobile device and the second side of the second TEC contacts a second skin portion of the mobile device.

27. The apparatus of claim 24, wherein at least one of the first side and the second side of the second TEC contacts a thermal solution.

28. The apparatus of claim 15, wherein the skin temperature is determined based on at least one of a die temperature, a power management integrated circuit (PMIC) power output, or a PMIC temperature.

29. An apparatus for wireless communication, comprising:

a processing system configured to:

determine whether a skin temperature at a skin portion of a mobile device is greater than a threshold temperature; and

provide power to a thermoelectric cooler (TEC) to cool a first side of the TEC while heating a second side of the TEC if the skin temperature is greater than the threshold temperature, wherein the first side of the TEC contacts the skin portion to cool the skin portion and the second side of the TEC faces a core of the mobile device.

30. The apparatus of claim 29, wherein the processing system is further configured to:

generate power via a temperature difference between the first side and the second side of the TEC if the determined skin temperature is equal to or less than the threshold temperature.

31. The apparatus of claim 30, wherein the generated power is stored in a battery of the mobile device or is provided directly to components of the mobile device.

32. The apparatus of claim 29, wherein the processing system is further configured to:

refrain from providing power to the TEC when the skin temperature is determined to be equal to or less than the threshold temperature.

33. The apparatus of claim 29, wherein the second side of the TEC contacts a thermal solution to cool heat generated from the second side of the TEC.

34. The apparatus of claim 33, wherein the thermal solution comprises at least one of a copper heat spreader, an aluminum heat spreader, a carbon heat spreader, or phase change material (PCM).

35. The apparatus of claim 29, wherein the skin portion of the mobile device at which the skin temperature is measured is at a display side of the mobile device.

36. The apparatus of claim 29, wherein the skin portion of the mobile device at which the skin temperature is measured is at a non-display side of the mobile device.

37. The apparatus of claim 29, wherein the processing system is further configured to:

determine whether a second skin temperature at a second skin portion of the mobile device is greater than the threshold temperature;

provide power to a second TEC to cool a first side of the second TEC while heating a second side of the second TEC if the second skin temperature is greater than the threshold temperature, wherein the first side of the second TEC contacts the second skin portion to cool the second skin portion and the second side of the second TEC faces the core of the mobile device.

38. The apparatus of claim 29, wherein the processing system is further configured to:

generate power via a temperature difference between a first side of a second TEC and a second side of the second TEC, the second TEC being located at an opposing side from the TEC.

39. The apparatus of claim 38, wherein the first side of the second TEC contacts a second skin portion of the mobile device and the second side of the second TEC faces the core of the mobile device.

40. The apparatus of claim 38, wherein the first side of the second TEC faces the core of the mobile device and the second side of the second TEC contacts a second skin portion of the mobile device.

41. The apparatus of claim 38, wherein at least one of the first side and the second side of the second TEC contacts a thermal solution.

42. The apparatus of claim 29, wherein the skin temperature is determined based on at least one of a die temperature, a power management integrated circuit (PMIC) power output, or a PMIC temperature.

43. A computer program product, comprising:

a computer-readable medium comprising code for:

determining whether a skin temperature at a skin portion of a mobile device is greater than a threshold temperature; and

providing power to a thermoelectric cooler (TEC) to cool a first side of the TEC while heating a second side of the TEC if the skin temperature is greater than the threshold temperature, wherein the first side of the TEC contacts the skin portion to cool the skin portion and the second side of the TEC faces a core of the mobile device.

44. The computer program product of claim **43**, wherein the computer-readable medium further comprises code for:

generating power via a temperature difference between the first side and the second side of the TEC if the determined skin temperature is equal to or less than the threshold temperature.

45. The computer program product of claim **44**, wherein the generated power is stored in a battery of the mobile device or is provided directly to components of the mobile device.

46. The computer program product of claim **43**, wherein the computer-readable medium further comprises code for:

refraining from providing power to the TEC when the skin temperature is determined to be equal to or less than the threshold temperature.

47. The computer program product of claim **43**, wherein the second side of the TEC contacts a thermal solution to cool heat generated from the second side of the TEC.

48. The computer program product of claim **47**, wherein the thermal solution comprises at least one of a copper heat spreader, an aluminum heat spreader, a carbon heat spreader, or phase change material (PCM).

49. The computer program product of claim **43**, wherein the skin portion of the mobile device at which the skin temperature is measured is at a display side of the mobile device.

50. The computer program product of claim **43**, wherein the skin portion of the mobile device at which the skin temperature is measured is at a non-display side of the mobile device.

51. The computer program product of claim **43**, wherein the computer-readable medium further comprises code for:

determining whether a second skin temperature at a second skin portion of the mobile device is greater than the threshold temperature;

providing power to a second TEC to cool a first side of the second TEC while heating a second side of the second TEC if the second skin temperature is greater than the threshold temperature, wherein the first side of the second TEC contacts the second skin portion to cool the second skin portion and the second side of the second TEC faces the core of the mobile device.

52. The computer program product of claim **43**, wherein the computer-readable medium further comprises code for:

generating power via a temperature difference between a first side of a second TEC and a second side of the second TEC, the second TEC being located at an opposing side from the TEC.

53. The computer program product of claim **52**, wherein the first side of the second TEC contacts a second skin portion of the mobile device and the second side of the second TEC faces the core of the mobile device.

54. The computer program product of claim **52**, wherein the first side of the second TEC faces the core of the mobile device and the second side of the second TEC contacts a second skin portion of the mobile device.

55. The computer program product of claim **52**, wherein at least one of the first side and the second side of the second TEC contacts a thermal solution.

56. The computer program product of claim **43**, wherein the skin temperature is determined based on at least one of a die temperature, a power management integrated circuit (PMIC) power output, or a PMIC temperature.

* * * * *