(12) INTERNATIONAL APPLICATION PUBLISHED UNDER THE PATENT COOPERATION TREATY (PCT)

(19) World Intellectual Property Organization
International Bureau

(43) International Publication Date
6 July 2017 (06.07.2017)

WIPO | PCT

(10) International Publication Number
WO 2017/116234 A1

(51) International Patent Classification:
E04G 23/08 (2006.01) *E02F 3/96* (2006.01)
B66C 23/00 (2006.01)

(21) International Application Number:
PCT/NL2016/050929

(22) International Filing Date:
30 December 2016 (30.12.2016)

(25) Filing Language: Dutch

(26) Publication Language: English

(30) Priority Data:
2016054 30 December 2015 (30.12.2015) NL

(71) Applicant: **HS MANAGEMENT EN KRAANVERHUUR B.V.** [NL/NL]; c/o Populierstraat 46, 4131 AR Vianen (NL).

(72) Inventor: **SMORENBURG, Johannes** *(deceased)*.

(72) Inventor: **SMORENBURG, Hendricus**; Populierstraat 46, 4131 AR Vianen (NL).

(74) Agent: **HUYGENS, Arthur V.**; P.O. Box 86, 3400 AB IJsselstein (NL).

(81) Designated States *(unless otherwise indicated, for every kind of national protection available)*: AE, AG, AL, AM, AO, AT, AU, AZ, BA, BB, BG, BH, BN, BR, BW, BY, BZ, CA, CH, CL, CN, CO, CR, CU, CZ, DE, DJ, DK, DM, DO, DZ, EC, EE, EG, ES, FI, GB, GD, GE, GH, GM, GT, HN, HR, HU, ID, IL, IN, IR, IS, JP, KE, KG, KH, KN, KP, KR, KW, KZ, LA, LC, LK, LR, LS, LU, LY, MA, MD, ME, MG, MK, MN, MW, MX, MY, MZ, NA, NG, NI, NO, NZ, OM, PA, PE, PG, PH, PL, PT, QA, RO, RS, RU, RW, SA, SC, SD, SE, SG, SK, SL, SM, ST, SV, SY, TH, TJ, TM, TN, TR, TT, TZ, UA, UG, US, UZ, VC, VN, ZA, ZM, ZW.

(84) Designated States *(unless otherwise indicated, for every kind of regional protection available)*: ARIPO (BW, GH, GM, KE, LR, LS, MW, MZ, NA, RW, SD, SL, ST, SZ, TZ, UG, ZM, ZW), Eurasian (AM, AZ, BY, KG, KZ, RU, TJ, TM), European (AL, AT, BE, BG, CH, CY, CZ, DE, DK, EE, ES, FI, FR, GB, GR, HR, HU, IE, IS, IT, LT, LU, LV, MC, MK, MT, NL, NO, PL, PT, RO, RS, SE, SI, SK, SM, TR), OAPI (BF, BJ, CF, CG, CI, CM, GA, GN, GQ, GW, KM, ML, MR, NE, SN, TD, TG).

Published:

— *with international search report (Art. 21(3))*

(54) Title: DEMOLITION APPARATUS

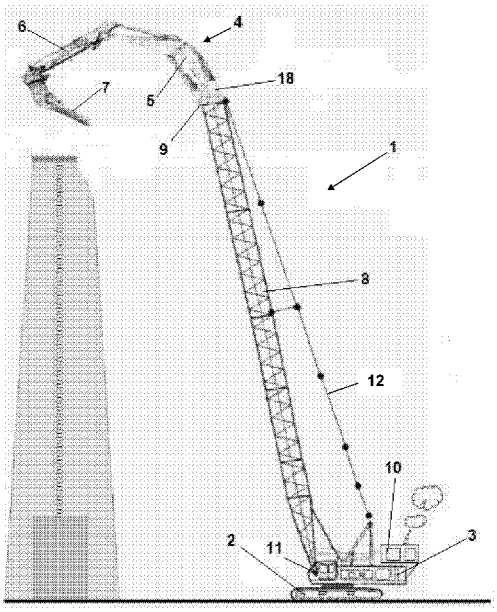

Fig. 1

(57) Abstract: The present invention relates to a mobile crane suitable for carrying out demolition work at great heights comprising a mobile base structure, a rotating superstructure mounted on the base structure which relative to the basic structure can rotate about a vertical axis, as well as a hydraulic demolition device comprising a basic body with a main arm and a handle for various demolition fittings, wherein the mobile crane also comprises a latticework mast, wherein in relation to the rotating superstructure the lower end of the mast is attached in a hinged manner to the superstructure and wherein the hydraulic demolition device is attached to the uppermost end of the mast.

WO 2017/116234 A1

Demolition apparatus

The present invention relates to a mobile crane which is suitable for carrying out demolition work at great heights. Such a crane will also be referred to by the trademark HOOGSLOPER®[1].

This mobile crane is preferably a self-propelled mobile crane, which may or may not be provided with outrigger pads and outrigger cylinders, and comprise a mobile base structure which makes it possible for the crane to travel over a surface, a rotating superstructure which is mounted on the base structure and which relative to the basic structure can rotate about a vertical axis, as well as a hydraulic demolition device, comprising a basic body, a main arm and a handle, wherein the handle is equipped with one or more demolition fittings.

Such demolition cranes are generally known and can be commercially purchased or hired in various types and sizes. These cranes are based on conventional hydraulic excavators with a boom and a handle, wherein the bucket is replaced with one or more demolition attachments.

Globally it is still a problem to carry out demolition work at great heights and in an environmentally-friendly manner. Up until now no machines have been available that from ground level up to a height of around 200 metres could carry out demolition work without people having to work at a great height and/or machines having to be placed at great heights.

According to the prior art, for high-level demolition work very large and heavy hydraulic demolition cranes are used, either with a telescopically extendable arm which can reach a height of approximately 90 metres, or with an extended arm, known as a “long arm” or “long front” in specialist jargon, which reaches a maximum height of around 40 metres. A crane of the first type is described for example in Japanese patent publication JP 2007/203221; a crane of the second type is, for example, a Liebherr® R 954 C VH-HDW with a modular demolition boom (see http://www.bouwmachineforum.nl/forum/viewtopic.php?t=25957).

Japanese patent publication JP H08-226236 A discloses a mobile demolition crane which comprises a movable base structure, as well as a rotating superstructure with a telescopically extendable arm on which a hydraulic demolition device is mounted.

Japanese patent publication JP 2006-265870 discloses a stationary demolition crane which comprises a latticework mast on which a hydraulic demolition device is attached, which, however, cannot turn relative to the latticework mast.

---

[1]The trademark HOOGSLOPER was registered in the EU on 16 December 2016 under number 015745557.

In addition, for demolition at great heights manned systems are used wherein structures with a winch are hoisted upwards and attached on or around an object such as a chimney. On such structures a running platform is usually mounted, on which a small demolition hammer or concrete shears is/are attached. A personnel lift also has to be built in order to bring the operating personnel to the working height.

The current systems have various drawbacks. The heavy hydraulic demolition machines take up a great deal of space and frequently arrangements have to be made for the substrate in connection with the inherent weight of the machine. Setting up and dismantling, as well as transporting are very work-intensive. The machines are set up close to the object being demolished so there is a risk that these can be affected by falling fragments. This appears to occur frequently.

The combating of harmful quartz dust which is released during the demolition of concrete structures and suchlike is carried out with a water spray through which the dust precipitates and is not blown away. However, as soon as the water has evaporated the quartz dust can still blow away. This measure is therefore only temporary and is mainly used to restrict overcontamination of the surrounding area during demolition.

Through all the adaptations to the original digging machines, the above-described demolition systems according to the prior art are relative costly. The method with a telescopic mast on a demolition machine is very sensitive to disruption, in particular through falling objects and dust formation during the work, through which unwanted failure occurs and much maintenance is needed. As previously indicated the working height of the machines is also restricted.

The fact that working with manned systems at great heights also causes problems is evident. These include the risk of persons falling, unfavourable weather conditions (wind, rain, snow etc.) and the lack of good suppression of quartz dust which is harmful for demolition workers and other people in the immediate surroundings of the work.

It is an object of the invention to create a solution to the problems outlined here. This is achieved through a mobile demolition crane which can in a safe, operationally-secure and environmentally-friendly manner carry out demolition work at a very great height (> 200 metres), has a relative low weight, can be easily set up and dismantled, easily transported and is cost-effective.

The invention provides a mobile demolition crane according to the preamble of claim 1 which is characterised in that the mobile crane also has a mast, wherein in relation to the rotating superstructure the lower end of the mast is attached in a hinged manner to the superstructure and wherein the hydraulic demolition device is attached to the uppermost end of the mast.

The invention is based on the idea of mounting on the top of the mast of a hoisting crane a hydraulic demolition device in the form of a basic body with the working arm of a digger, i.e. a boom (main arm) with a handle, an extended boom with an extended handle arm or a so-called “long front” or “long arm” device. On this handle, in place of a bucket the desired demolition attachments can be mounted, such a concrete pulveriser, combination shears, concrete sheers, steel shears, demolition hammers or sorting grippers.

By combining the existing technology of a hoisting crane with a long mast with a hydraulically operating arm of a digger provided with demolition attachment fixed to the uppermost end of the mast, according to the invention a design of a demolition crane is brought about which can be universally used to safely work at great heights.

The mast on which the hydraulic demolition device is attached is a single or composite mast, wherein the mast is optionally stabilised by a back mast. As used herein, a composite mast means a main mast consisting of two or more parts functionally connected to each other, of which the uppermost part optionally is a jib with one or more jib gantries. Examples of suitable masts for use in the mobile demolition crane according to the invention include a simple latticework mast or a latticework mast with a rigid or movable jib, a latticework mast with a superlift backmast and superlift ballast, a telescopic mast with a built-on rigid or movable jib of latticework mast parts.

In principle the hydraulic demolition device can be mounted to the uppermost end of any suitable hoisting crane, wherein on the head of the mast with a roller head an adapter is applied, of, if desired, the whole head of the mast with a roller head can be replaced by an adapter on which the hydraulic demolition device is mounted. On the basis of the height and the nature of the demolition work to be carried out a person skilled in the art can easily determine which type of crane is most suitable for him to build a demolition device according to the invention.

Based on the mobile demolition crane according to the invention a standard caterpillar or mobile hoisting crane (auto-crane) is provided with a mast, preferably in the form of a latticework structure. This is preferably modular in order to make it easy to transport the entire crane from one demolition site to the next. These masts are available in various dimensions, with lengths (main mast and movable jib) to over 200 metres. At the upper end of the mast, for example in the form of a latticework boom or latticework jib, an adapter is mounted which is specific to the dimensions of the mast, after which the hydraulic demolition device is mounted on the adapter. In this way the design can be universally used.

The adapter is preferably an assembly plate which on one side can be provided with lugs in order to attach the plate to the mast and onto the other side of which

the base structure of the hydraulic demolition device can be attached. At the same time it is advantageous to provide the adapter plate with lugs for fastening the guy wires of the mast. The adapter can also be of any other shape which is suitable for functionally connecting the hydraulic demolition device to the mast.

According to a preferred embodiment the uppermost segment of the latticework boom or latticework jib of a hoisting crane, on which the roller head is attached, is replaced by a segment of approximately the same length on which the adapter is mounted. The adapter can also advantageously be mounted on this segment.

According to a special embodiment of the invention the hydraulic demolition device can rotate on the mast about a vertical axis of rotation through which the demolition arm with the handle does not have to be swivelled together with the base crane. For this the base body of the hydraulic demolition device is mounted on a rotating assembly which during rotation must be located on a horizontal plane. The rotating assembly is therefore mounted on the lower side of a base plate, said plate being connected at one end in a hinged manner around a horizontal axis of rotation with the higher part of the adapter, here preferably an adapter plate. Between the opposite end of the base plate and the lower part of the adapter plate (or other adapter) one or more hydraulic cylinder(s) are arranged which ensure that the base plate is brought into a horizontal position with the rotating assembly through which rotation of the hydraulic demolition device can take place. In accordance with this embodiment a greater working range is possible and work can be carried out very precisely at a great height which benefits the progress of the demolition work and its safety.

Actuation of the hydraulic demolition device at the upper end of the mast takes place by means of a power pack, i.e. a motor with a hydraulic system such as pumps, regulating valves, oil reservoir etc. which is placed in a unit on the rotatable superstructure of the basic hoisting crane. Energy transmission (hydraulic oil) takes place by means of hoses and/or pipelines to the demolition device at the head of the mast. It is advantageous for the control valves for the hydraulic drive of the main arm and handle arm with demolition aid(s) to be attached at the top in the mast close to the hydraulic demolition device.

Operation of the hydraulic demolition device preferably takes place from the ground, preferably from an additional control cab mounted next to the existing crane cab. By means of electrical and electronic connections (power cables, data lines) the control equipment in the additional cab is connected to the power pack. Preferably the additional control cab is mounted in a hinged manner at the rear on a platform next to the existing cab so that during the demolition work the additional cab can be brought into a tilted

position, for example by means of a hydraulic piston. In this way the crane operator can lie slightly back and has a better view of the work is he doing.

Operation can also be carried out via wireless remote control which is connected to the additional control cab. If the cab of the crane on which the demolition device is mounted has sufficient space, operation of the hydraulic demolition device can also take place from there and the additional control cab can be dispensed with.

According to the invention a relatively lightweight and cost-effective design of the demolition device is produced, which takes up little space and can easily be assembled, dismantled and transported.

Depending on the selected mast, preferably a modular mast with a latticework structure, the mobile demolition crane according to the invention can be set up at a greater distance from the object to be demolished than in the case of hitherto known demolition installations, as a result of which work can be carried out more safely and damage to the machine is avoided.

The control and supervision of the work with the hydraulic demolition device at a great height takes place by means of a camera system, wherein one or more movable cameras are preferably mounted on the main arm and/or handle and the corresponding monitors are located in a control unit on the ground. The hydraulic demolition device can also be equipped with suitable lighting on a boom and/or handle in order to be able to work in dark weather or during night hours.

In order to prevent the distribution or blowing way of hazardous quartz dust (concrete dust) etc., according to preferred embodiment of the invention dust extraction expediently takes place at the source by means of point suction at the demolition attachment mounted on the handle. The dust is extracted on both sides of the demolition attachment, such as concrete sheers, combination shears or demolition hammer. According to this embodiment, in the upper part of the latticework mast there are preferably one or more extraction devices which are connected via metal or plastic pipes and/or flexible hoses to suction nozzles attached on both sides of the demolition attachment. From the extraction device(s) a pipeline leads to the base of the latticework mast where one or more interchangeable dust sack(s) is/are connected in order collect the quartz dust etc.

With the mobile demolition crane according to the invention, on the basis of a combination of existing methods the demolition of buildings, chimneys, steel structures, cooling towers etc. can be carried out at great heights in a safe, efficient and environmentally-friendly manner. Operation is preferably entirely carried out from a control unit at ground level so that no persons have to work at great heights any more. Through

the advanced dust extraction no or almost no distribution of hazardous quartz due takes place in the demolition of concrete structures for example.

With regard to the systems currently in use, the use of the mobile demolition crane according to the invention provides a large cost saving, a high degree of safety and takes great heed of health and the environment. In this way the demolition of objects which in the past was very costly, too expensive or too unsafe to be done can be carried out in a safe and cost-saving manner.

The present invention also relates to a method of assembling and operating a mobile demolition crane as described herein, comprising the following steps.

The base machine, i.e. in principle a mobile hoisting crane, is constructed according the specifications and assembly plan of the relevant manufacturer. The main mast, which may or may not be provided with an assembly rigid or movable job, wherein both the main mast and the jib are preferably designed as a latticework structure, lies horizontally on the ground after assembly. At the end of the main mast or, if present, the rigid or movable jib a temporary prop is placed so that the head of the main mast or the rigid or movable jib is suspended free of the ground.

Depending on whether the adapter has to be mounted on the main mast or the jib, the head of the main mast or the rigid or movable jib is dismantled. Here there are two forms of embodiment:

1. the adapter with the hydraulic demolition device is mounted directly on the roller head of the main mast, or, if present, on the rigid or movable jib, wherein the roller head remains mounted on the main mast or the rigid or movable jib;

2. the roller head is dismantled and the assembly or the adapter with hydraulic demolition devices takes place directly on the uppermost mast section (without roller head) of the main mast, or the rigid of movable jib as applicable.

The hydraulic demolition device is hoisted up with an auxiliary crane using hoisting tools (slings or chains) and manoeuvred with the adapter onto or against the place of the main mast or the rigid or movable jib.

Hereafter fastening pins or bolts are applied with which the adapter with the hydraulic demolition device is attached to the main mast, or the rigid or movable jib.

After attaching the hydraulic demolition device to the main mast, or the rigid or movable jib, the slings or chains between the hydraulic demolition device and the auxiliary crane are removed and the demolition device is mounted. Finally the mast of the demolition device is set up, preferably according to the specifications of the manufacturer of the original crane.

The invention will now be described and explained by way of the attached drawings.

Fig. 1 shows a side view of an example of a mobile demolition crane according to the present invention, wherein the hydraulic demolition device is mounted on a modular latticework mast of a crane on caterpillar tracks;

Fig. 2 shows of an example of a mobile demolition crane according to the present invention in miniature wherein the hydraulic demolition device is mounted on the head of the main mast of an auto-crane with a superlift backmast and superlift ballast;

Fig. 3 shows a detailed side view of Fig. 2 of a hydraulic demolition device with combination shears mounted on the upper end of a latticework mast;

Fig. 4 is like Fig. 3 but with steel shears instead of combination shears;

Fig. 5A and Fig. 5B respectively show a perspective view and a side view of a universal adapter element for assembly of the hydraulic demolition device;

Fig. 6A and 6B respectively show a perspective view and side view of the adapter plate of Fig. 5A and 5B with the basic body of the hydraulic demolition device mounted thereon;

Fig. 7 show a side view of the design of an adapter with a rotating assembly for rotating the hydraulic demolition device.

Fig. 8 is a photographic reproduction of an embodiment of the mobile demolition crane according to the invention, in which the mast is a simple latticework mast on which a hydraulic demolition device is mounted;

Fig. 9 is a photographic reproduction of a power pack for the drive of the hydraulic demolition device which is located on the rotatable superstructure and of an additional control cab which is located next to the existing crane cab;

Fig. 10 is a photographic reproduction of the additional control cab of Fig. 9 in a side view, wherein the additional control cab is attached in a hinged manner;

Fig. 11 is a photographic reproduction of the embodiment according to Fig. 8 wherein the latticework mast is shown with the hydraulic demolition device as of the platform next to the additional control cab.

If should be noted that in the various figures that as far as possible the same reference numbers are used for the same or similar components.

In Fig. 1 a mobile demolition crane 1 is shown in the embodiment of a mobile crane with a modular latticework mast 8 on which a hydraulic demolition device 4 is mounted. The mobile demolition crane 1 has a displaceable base structure on caterpillar tracks 2 and a superstructure 3 which can rotate relative to the base structure 2 about a imaginary vertical axis. At its lowermost end the latticework mast 8 is attached in a hinged manner about the rotating points 11 to the superstructure 3. The uppermost segment of the original latticework mast 8 with the roller head for the hoisting cable is replaced with an adaptor, in this case the adapter plate 9, on which the hydraulic demolition device 4 is

fastened. This comprises a base body 18, a main arm 5, a handle 6 and one or more demolition attachments 7, in this drawing a concrete pulveriser. Tensioning of the mast takes place through the guy wires12 which are attached to the upper edge of the adapter plate 9.

The superstructure 3 contains the drive, control and operating systems of the original crane, including a crane cab from which control and operation take place. In addition, built onto the superstructure 3 is a power pack 10 in which the drive system of the hydraulic demolition device 4 is accommodated, comprising a diesel motor with a hydraulics system, including pumps, regulating values, oil reservoir etc. Also on the superstructure 3 is an additional cab 30 which is built next to the original crane cab, from which operation of the hydraulic demolition device 4 takes place.

In Fig. 2 an embodiment of a mobile demolition crane is shown wherein the hydraulic demolition device 4 is mounted on the main mast 13 of a mobile crane with a superlift backmast 14 and superlift ballast 31. The main mast 13 and the superlift back mast 14 are both connected to the superstructure 3 in a hinged manner. This crane is here a self-propelled auto-crane with a travelling base structure on wheels 2a. The crane has four projecting outrigger pads with outrigger cylinders (30) which provide the structure with the necessary stability when the demolition device is in operation. In this drawing the demolition aid 7a is in the form of combination shears.

In Fig. 3 and Fig. 4 a detailed image is shown of the uppermost end of a modular latticework mast 13 according to Fig. 2, wherein the uppermost segment of the roller head is replaced with a segment 19 on which the adapter plate 19 is fastened. Mounted on this adapter plate is a base body 18 of the hydraulic demolition device 4. The control valves for the drive of the hydraulic demolition device are also attached to the uppermost end of the latticework mast (not shown). In Fig. 3 the demolition attachment is in the form of combination shears 7a, in Fig. 4 steel shears 7b.

In Fig. 5A and 5B the adapter plate 9 is shown in more detail. On the underside of the plate in the vicinity of the corners there are four lugs 15 which are essentially perpendicular on the plate and with which the adapter or adapter plate is mounted on the upper edge of the latticework jib 13, 19. On the upper side of the adapter plate two plates 16 are applied at two opposite edges which are essentially horizontal on the plane of the adapter plate and which are each provided with a fastening eye 17 for the guy wires 12.

In Fig. 6A and 6B the attachment of the base body 18 of the hydraulic demolition device 4 to the adapter plate 9 is shown in more detail. The base body 18 is fastened to the adapter plate with bolts 20. In this case the base body comprises a base plate and two essentially horizontally applied plates which are each provided with a fastening eye 21 for a central pin fastening of the main arm 5 of the hydraulic demolition

device 5 and a fastening eye 22 for the lifting cylinders of the main arm 5 of the hydraulic demolition device 4.

In Fig. 7 the design of the adapter with the rotating assembly 25 for rotation of the hydraulic demolition device 4 is shown. The rotating assembly 25 is arranged between a lower plate 23 and an upper plate 24. The base body 18 of the hydraulic demolition device 4 is here attached to the upper plate 24. In order to be able to rotate the main arm 5 with the handle 6 the rotating assembly must lie in a horizontal plane. This is achieved by fastening the lower plate 23 of the rotating assembly 25 on the highest edge of the adapter plate 9 in a hinged manner to the adapter plate via the rotating points 29. On the lower side of the adapter plate 9, between the adapter or adapter plate and lower plate 23. i.e. an assembly plate 28 welded onto the lower plate, two hoisting cylinders 27 are arranged with which the lower plate 23 and thus the rotating assembly 25 can be brought into a horizontal plane.

Figures 8 to 11 show photographic images of the HOOGSLOPER® according to the invention in practice. In Fig. 8 the mast of a simple latticework mast on which the hydraulic demolition device is mounted is shown. The detailed photograph in Fig. 9 shows the power pack 10 for the drive of the hydraulic demolition device 4 which is located on the rotatable superstructure 2, as well as the additional control cab 30 for controlling the hydraulic demolition device 4 which is located next to the existing crane cab.

Fig. 10 is a photographic reproduction of the additional control cab of Fig. 9 in a side view, wherein the additional control cab 30 is attached at the back in a hinged manner. The additional control cab can be tilted by means of the hydraulic piston 31 so during demolition work at great heights the crane operator has a better view of his work. This is illustrated in Fig. 11.

There are also displays in the additional control cab which are connected to one or more controllable cameras on the latticework mast 8 and/or the hydraulic demolition device 4.

It will be clear to a person skilled in the art that the present invention is not limited to the embodiments described here by way of examples and shown in the figures. A mobile demolition crane of this type can be produced in various forms and dimensions and with different modifications without departing from the essence of the invention. Such modifications and adaptations are included in this invention. The protective scope of the invention is exclusively determined by the following claims.

Claims

1. Mobile demolition apparatus (1), preferably in the form of a self-propelled mobile crane which is suitable for carrying out demolition work at great heights, comprising:

- a mobile base structure (2) which makes it possible for the crane to travel over a surface,

- a rotating superstructure (3) which is mounted on the base structure,

- a hydraulic demolition device (4), comprising a basic body (18), a main arm (5) and a handle (6), wherein the handle (6) is equipped with one or more demolition fittings (7),

wherein the mobile crane also has a mast, wherein in relation to the rotating superstructure the lower end of the mast is attached in a hinged manner to the superstructure (3) and wherein the hydraulic demolition device (4) is attached to the uppermost end of the mast.

2. Mobile demolition crane according to claim 1, wherein the latticework mast is a single or composite mast, wherein the mast is optionally stabilised by a back mast, wherein the composite mast comprises a main mast with two or more parts functionally connected to each other, of which the uppermost part optionally is a jib with one or more jib gantries.

3. Mobile demolition crane according to claim 1 or 2, wherein the latticework mast is a single latticework mast, or a latticework mast with a rigid or movable jib, or a latticework mast with a superlift backmast and superlift ballast, or a telescopic mast with a built-on rigid or movable jib of latticework mast parts.

4. Mobile demolition crane according to claim 3, wherein the latticework mast or parts of the latticework mast consists of modular parts.

5. Mobile demolition crane according to any one of claims 1-4, wherein the hydraulic demolition device is mounted to the uppermost end of the mast through an adapter

6. Mobile demolition crane according to claim 5, wherein the adapter is an assembly plate provided with lugs to attach the plate to the mast and optionally with lugs for fastening the guy wires of the mast.

7. Mobile demolition crane according to any one of claims 1-6, wherein the mobile demolition crane is a hoisting crane with a high main mast, optionally voorzien van een starre of movable jib, welke hoofdmast of jib aan het uiteinde een rollenkop omvat, waarbij op de van de rollenkop voorziene kop van de hoofdmast of van de starre of beweegbare jib een adapter is aangebracht, of waarbij de gehele kop van de mast met rollenkop door een adapter is vervangen, waarbij de hydraulische sloopinrichting op de adapter is gemonteerd.

8. Mobile demolition crane according to any one of claims 1-7, wherein the hydraulic demolition device can rotate relative to the mast around a vertical axis of rotation.

9. Mobile demolition crane according to claim 8, wherein between the adapter (9) and the lower side of the base body (18) van de hydraulische sloopinrichting (4) een draaikrans (25) is aangebracht om de hydraulische sloopinrichting te kunnen roteren, welke draaikrans aan de onderzijde op een basisplaat (25) is gemonteerd, welke plaat aan één uiteinde scharnierend met de adapter (9) is verbonden en aan het tegenoverliggende uiteinde door middel van een of meer hydraulische cilinders (27) met de adapter is verbonden, waarbij de hydraulische cilinders ervoor zorgen dat de basisplaat (23) tijdens de rotatie van de hydraulische sloopinrichting in een horizontaal vlak wordt gehouden.

10. Mobile demolition crane according to any one of claims 1-9, wherein the mobile demolition crane is provided with a powerpack for the actuation of the hydraulic demolition device, wherein the powerpack is located on the rotatable superstructure.

11. Mobile demolition crane according to any one of claims 1-10, wherein the mobile demolition crane is provided with an additional control cab to control the hydraulic demolition device, wherein the additional control cab is located next to the existing crane cab.

12. Mobile demolition crane according to any one of claims 1-11, wherein the mobile demolition crane is equipped with a dust extraction device.

13. A method for assembling a mobile demolition crane, as defined in any one of claims 1-12, said method comprising the following steps:

a. een mobiele hijskraan, die als basis voor de sloopinrichting wordt gebruikt en die een hoofdmast omvat, die desgewenst is voorzien van een starre of beweegbare jib, wordt opgebouwd volgens voorschrift en opbouwschema van de fabrikant,

b. de op de grond liggende hoofdmast, indien aanwezig met starre of beweegbare jib, wordt vrij gehangen van de grond, waarna hetzij

c1. de adapter met hydraulische sloopinrichting direct op de rollenkop van de hoofdmast of, indien aanwezig, van de starre of beweegbare jib wordt gemonteerd, waarbij de rollenkop aan de hoofdmast of aan de starre of beweegbare jib gemonteerd blijft, of

c2. de rollenkop aan de hoofdmast of, indien aanwezig aan de starre of beweegbare jib, wordt gedemonteerd, waarna de adapter met hydraulische sloopinrichting aan het bovenste mastdeel van de hoofdmast of, indien aanwezig, aan de starre of beweegbare jib wordt gemonteerd,

d. de hoofdmast, eventueel uitgerust met de starre of beweegbare jib, met de aan de mast of jib gemonteerde hydraulische sloopinrichting wordt opgericht.

14. The method according to claim 13, wherein the main mast is a latticework mast.

15. Mobile demolition crane according to claim 11, wherein the adiitional control cab is mounted in a hinged manner at the rear lower part and is also provided with a hydaulic piston to secure the cabin under a desired angle.

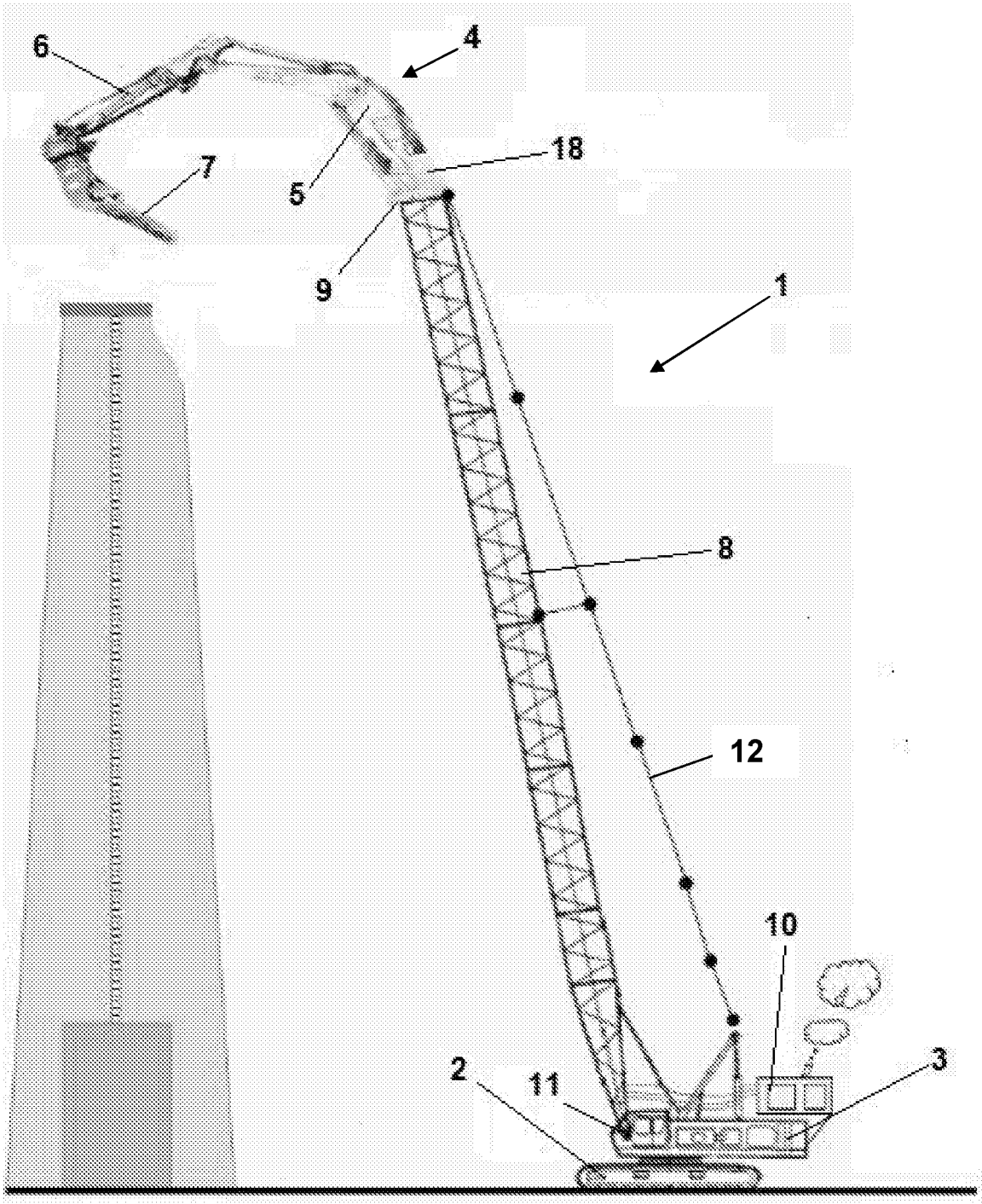

Fig. 1

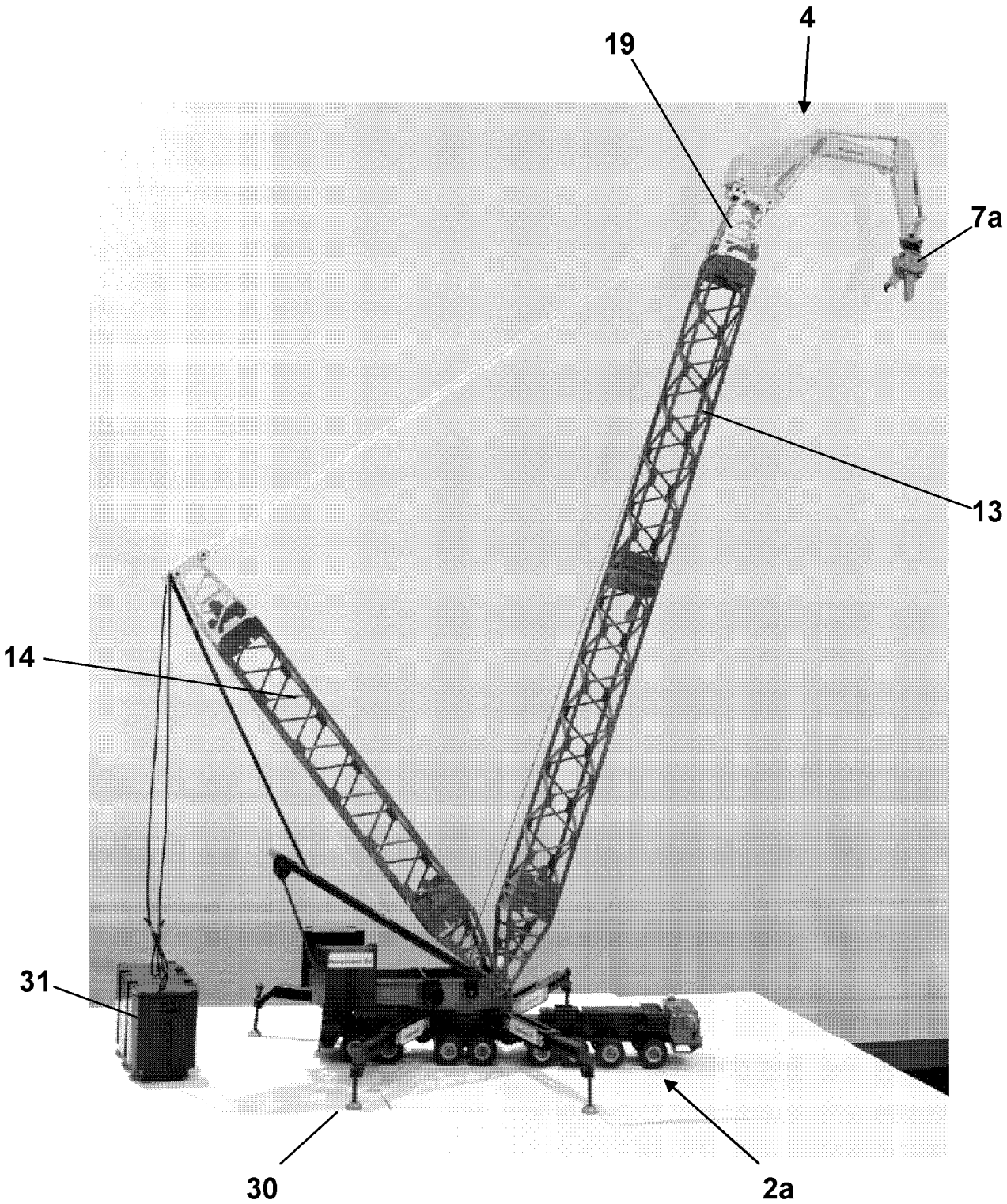

Fig. 2

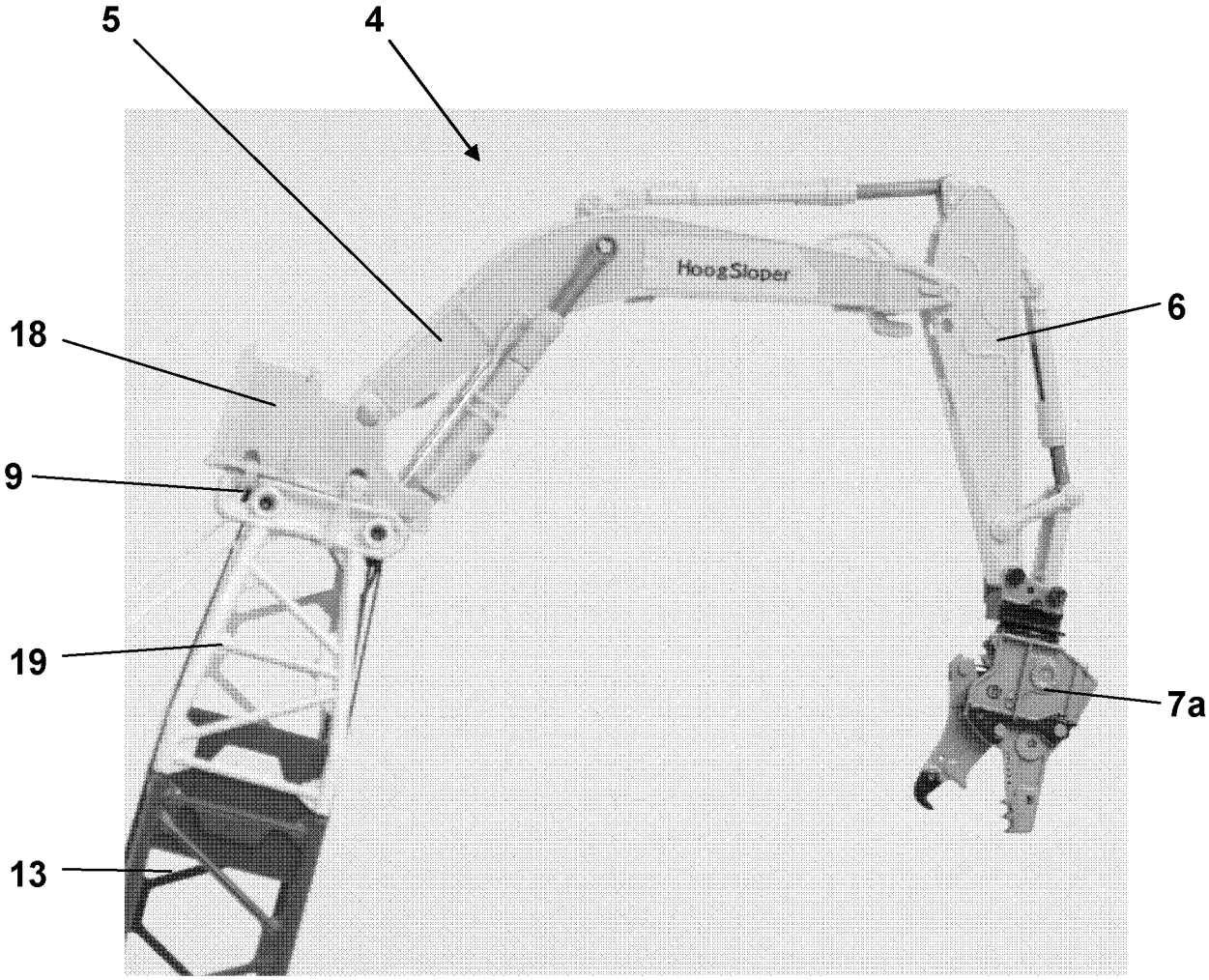

Fig. 3

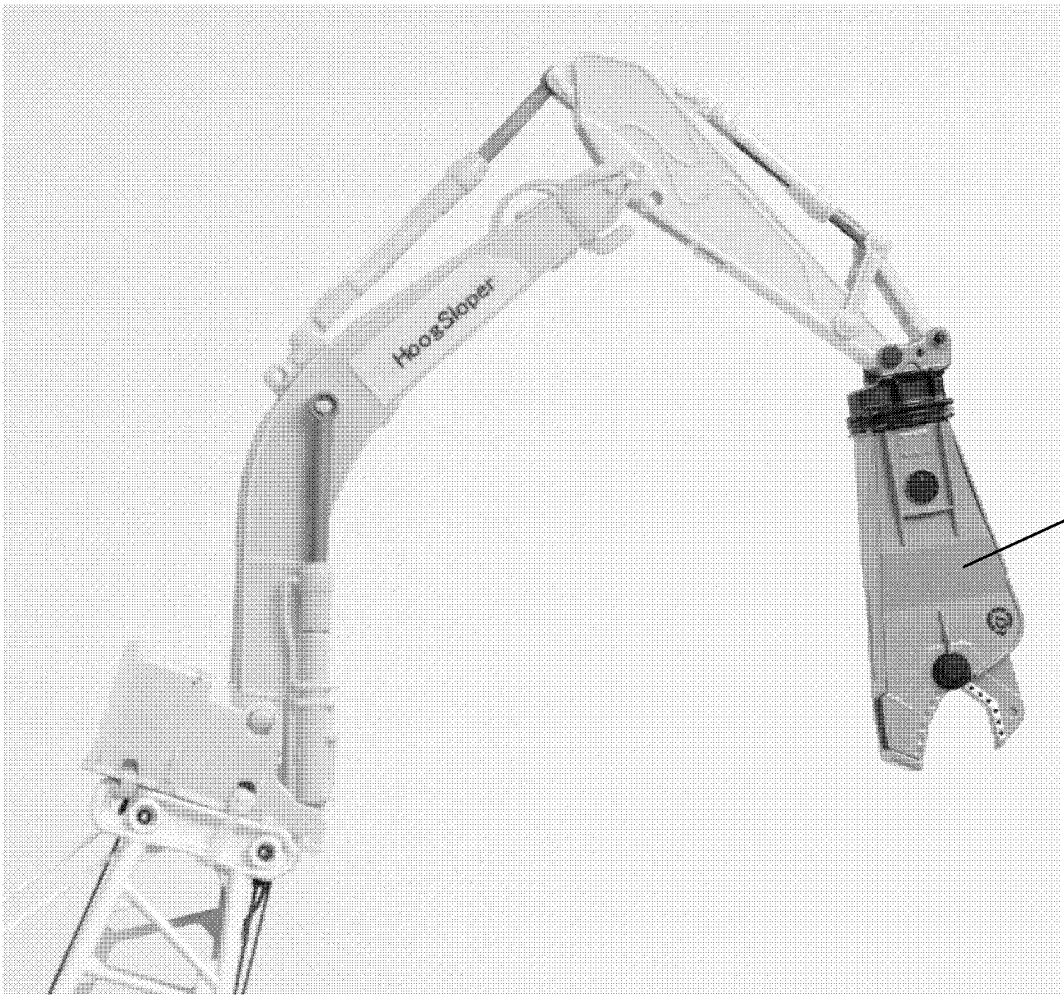

Fig. 4

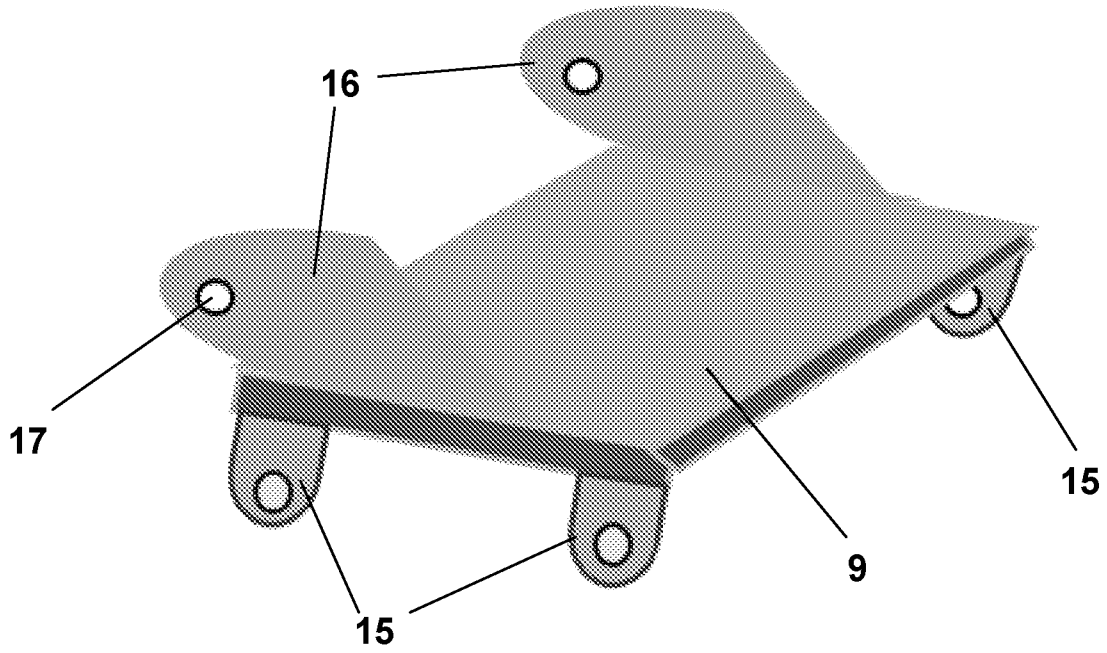

Fig. 5A

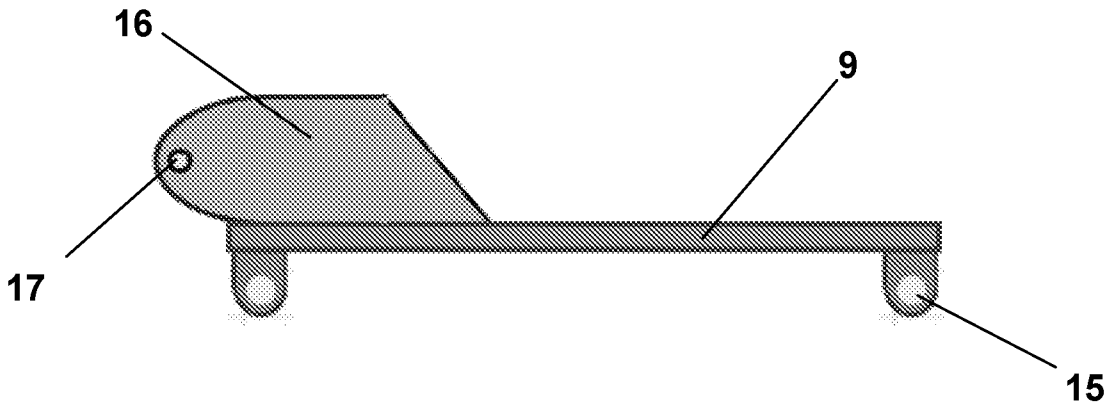

Fig. 5B

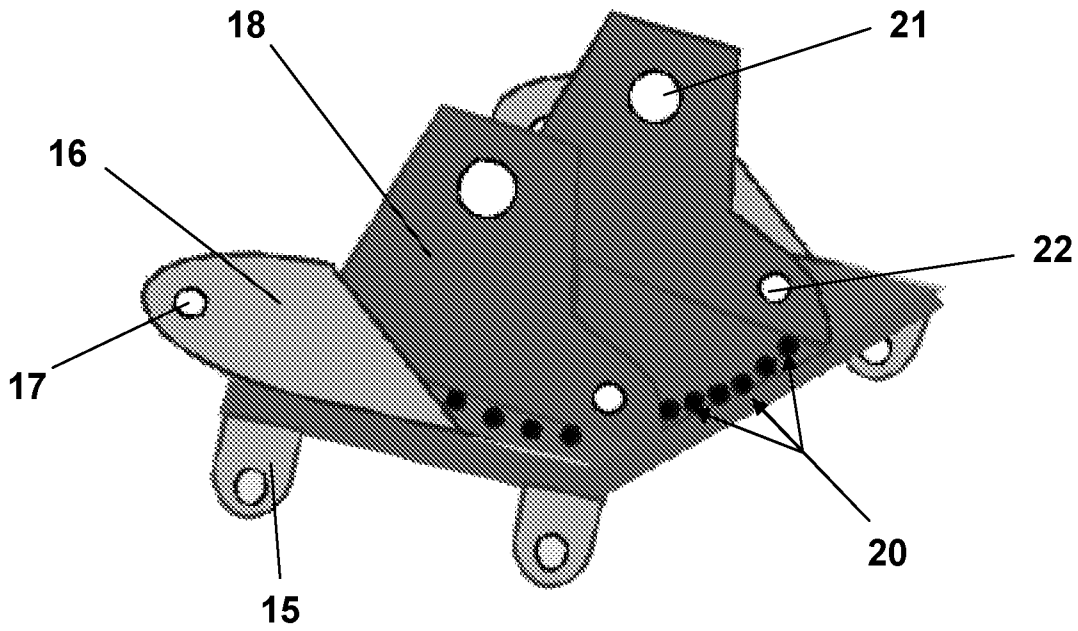

Fig. 6A

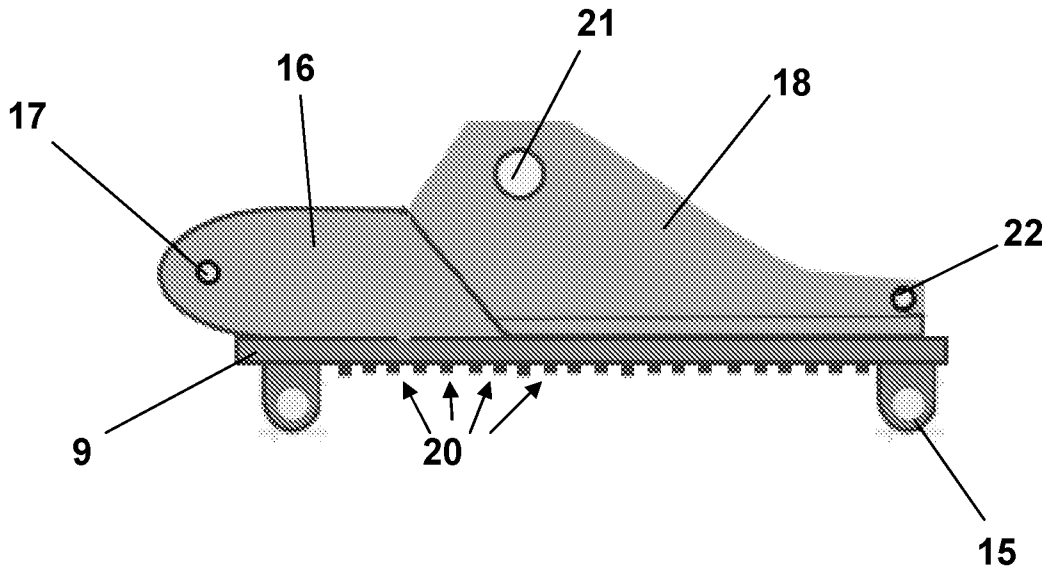

Fig. 6B

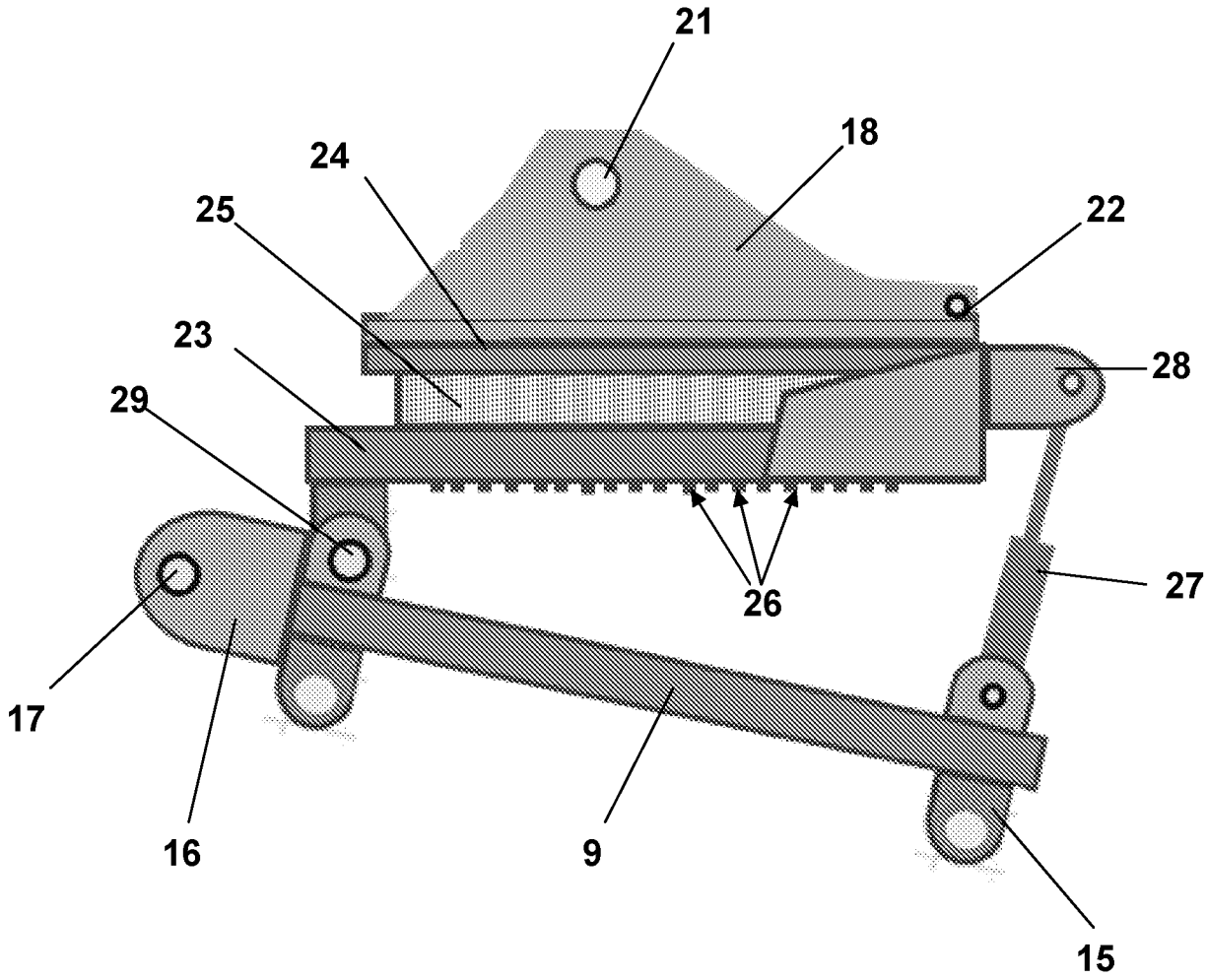

Fig. 7

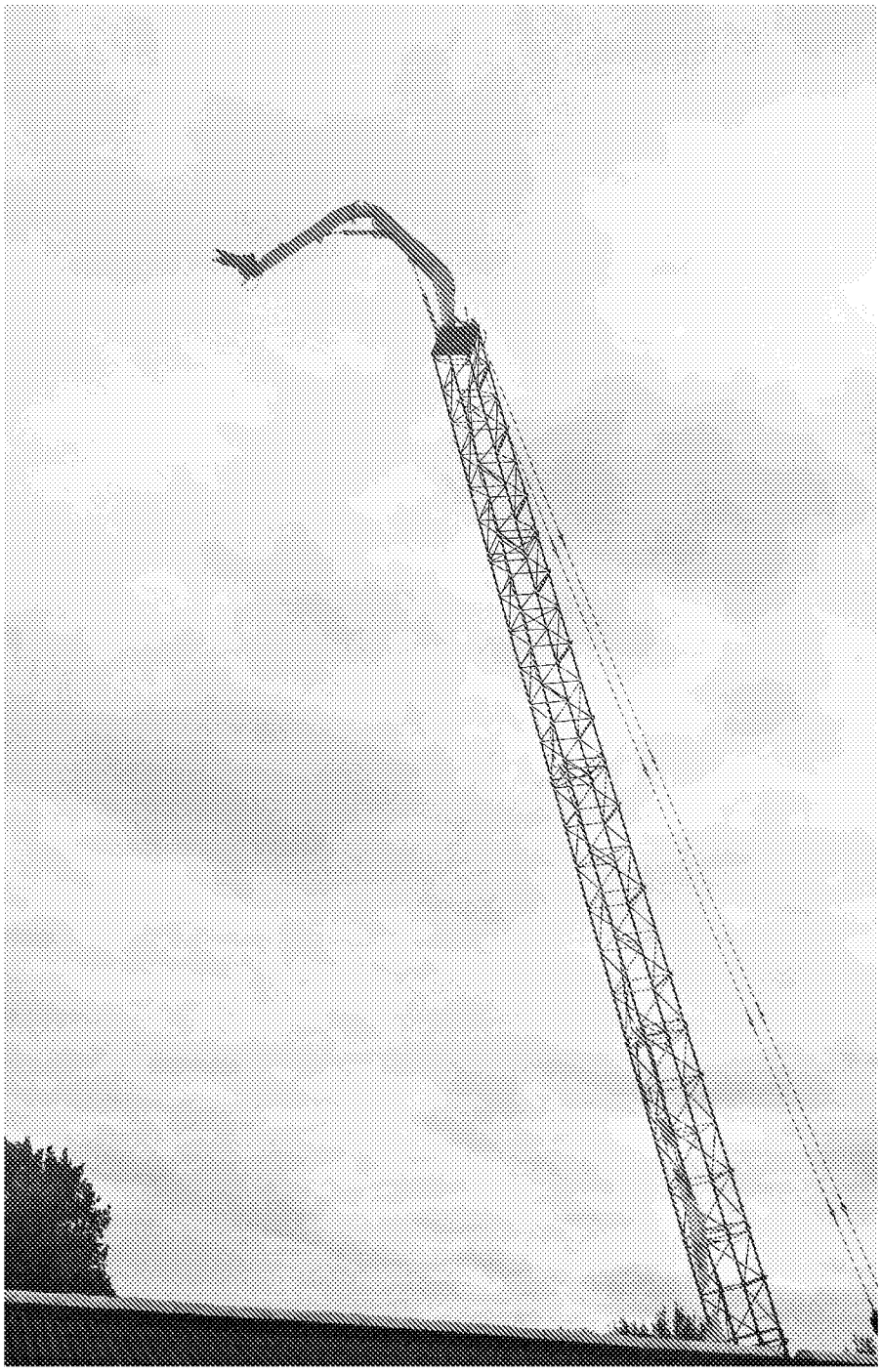

Fig. 8

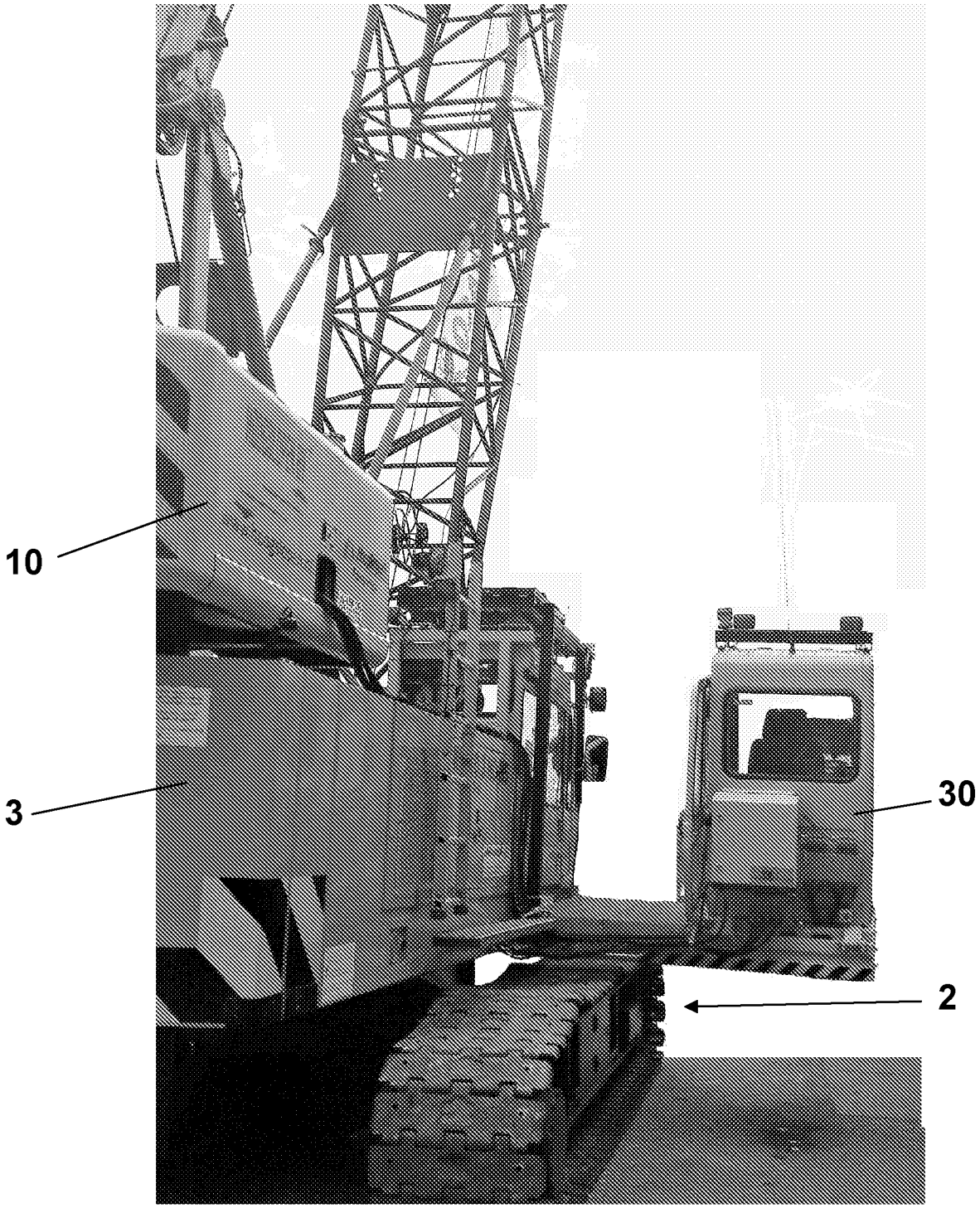

Fig. 9

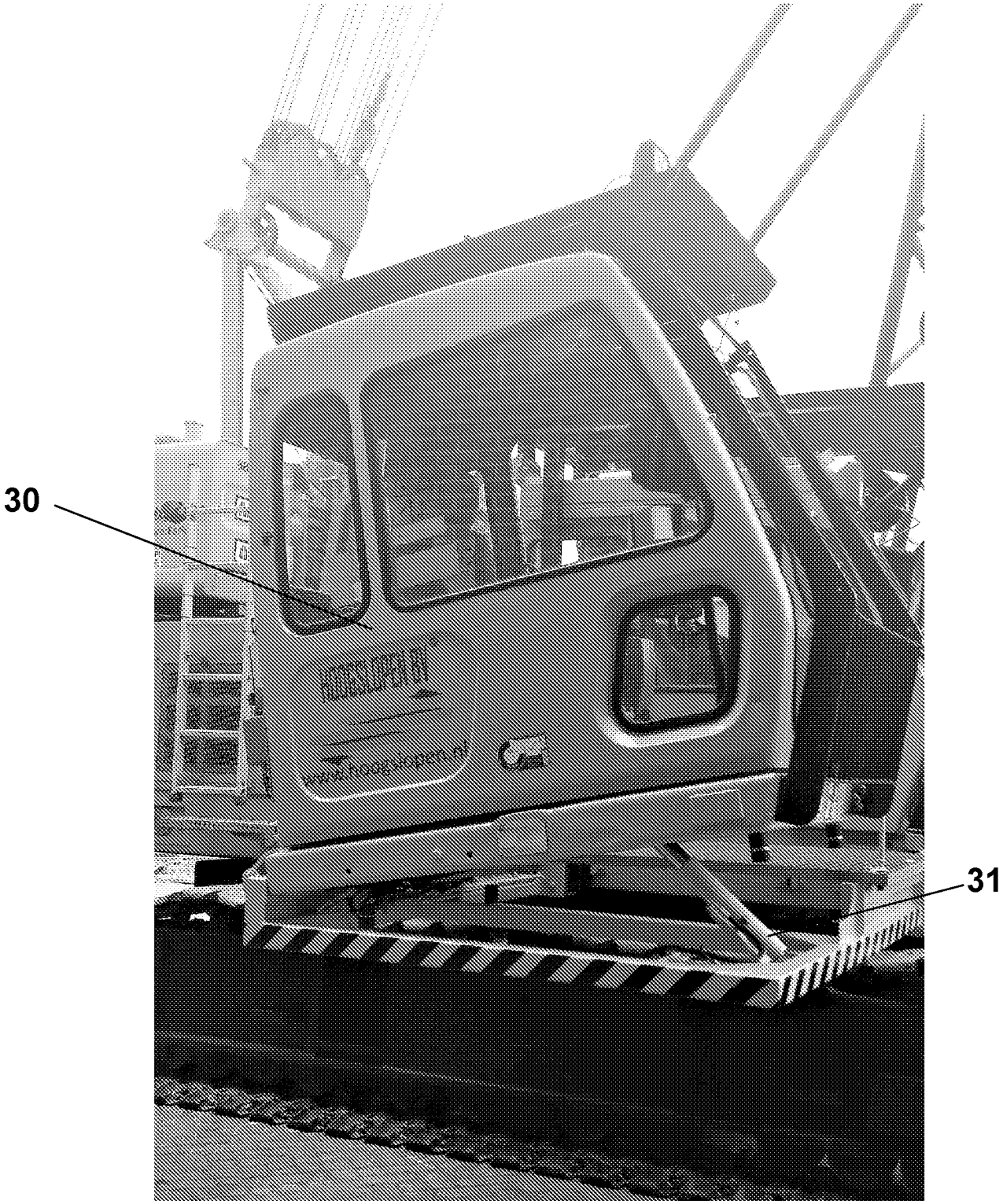

Fig. 10



Fig. 11

INTERNATIONAL SEARCH REPORT

International

PCT/NL2016/050929

A. CLASSIFICATION OF SUBJECT MATTER

INV. E04G23/08 B66C23/00 E02F3/96

ADD.

According to International Patent Classification (IPC) or to both national classification and IPC

B. FIELDS SEARCHED

Minimum documentation searched (classification system followed by classification symbols)

E04G B66C E02F

Documentation searched other than minimum documentation to the extent that such documents are included in the fields searched

Electronic data base consulted during the international search (name of data base and, where practicable, search terms used)

EPO-Internal, WPI Data

C. DOCUMENTS CONSIDERED TO BE RELEVANT

Category*	Citation of document, with indication, where appropriate, of the relevant passages	Relevant to claim No.
X	JP H04 363472 A (NIPPON STEEL CORP; OKUMURA CORP) 16 December 1992 (1992-12-16)	1-12,15
Y	figures 1-4	13,14

X	JP S50 62924 U (DESERTED QIU) 9 June 1975 (1975-06-09)	1-12,15
A	figure 1	13,14

X	NL 8 003 248 A (LIEBHERR HYDRAULIKBAGGER) 6 January 1981 (1981-01-06)	1-5,10
A	figures 1,2	6-9, 11-15

X	JP 8- 226236 A (UNKNOWN) 3 September 1996 (1996-09-03) cited in the application	1-12,15
Y	figures 1-4	13,14

	-/--	

[X] Further documents are listed in the continuation of Box C.

[X] See patent family annex.

* Special categories of cited documents :

"A" document defining the general state of the art which is not considered to be of particular relevance

"E" earlier application or patent but published on or after the international filing date

"L" document which may throw doubts on priority claim(s) or which is cited to establish the publication date of another citation or other special reason (as specified)

"O" document referring to an oral disclosure, use, exhibition or other means

"P" document published prior to the international filing date but later than the priority date claimed

"T" later document published after the international filing date or priority date and not in conflict with the application but cited to understand the principle or theory underlying the invention

"X" document of particular relevance; the claimed invention cannot be considered novel or cannot be considered to involve an inventive step when the document is taken alone

"Y" document of particular relevance; the claimed invention cannot be considered to involve an inventive step when the document is combined with one or more other such documents, such combination being obvious to a person skilled in the art

"&" document member of the same patent family

Date of the actual completion of the international search	Date of mailing of the international search report
8 March 2017	14/03/2017

Name and mailing address of the ISA/	Authorized officer
European Patent Office, P.B. 5818 Patentlaan 2 NL - 2280 HV Rijswijk Tel. (+31-70) 340-2040, Fax: (+31-70) 340-3016	Baumgärtel, Tim

INTERNATIONAL SEARCH REPORT

International

PCT/NL2010/050929

C(Continuation). DOCUMENTS CONSIDERED TO BE RELEVANT

Category*	Citation of document, with indication, where appropriate, of the relevant passages	Relevant to claim No.
X Y A	JP S56 57338 U (HIROSHIMA PREFECTURE) 18 May 1981 (1981-05-18) figures 1,2 -----	1-7, 10-12,15 13,14 8,9

INTERNATIONAL SEARCH REPORT

Information on patent family members

International

PCT/NL2010/050929

Patent document cited in search report	Publication date	Patent family member(s)	Publication date
JP H04363472 A	16-12-1992	JP H0643760 B2	08-06-1994
		JP H04363472 A	16-12-1992
JP S5062924 U	09-06-1975	NONE	
NL 8003248 A	06-01-1981	FR 2470202 A1	29-05-1981
		NL 8003248 A	06-01-1981
JP 8-226236 A	03-09-1996	JP 3499630 B2	23-02-2004
		JP H08226236 A	03-09-1996
JP S5657338 U	18-05-1981	NONE	