April 21, 1970 J. J. DIECKMANN ET AL 3,507,354

SOUND ATTENUATING AIR DISCHARGE TERMINAL DEVICE

Filed June 14, 1968 2 Sheets-Sheet 1

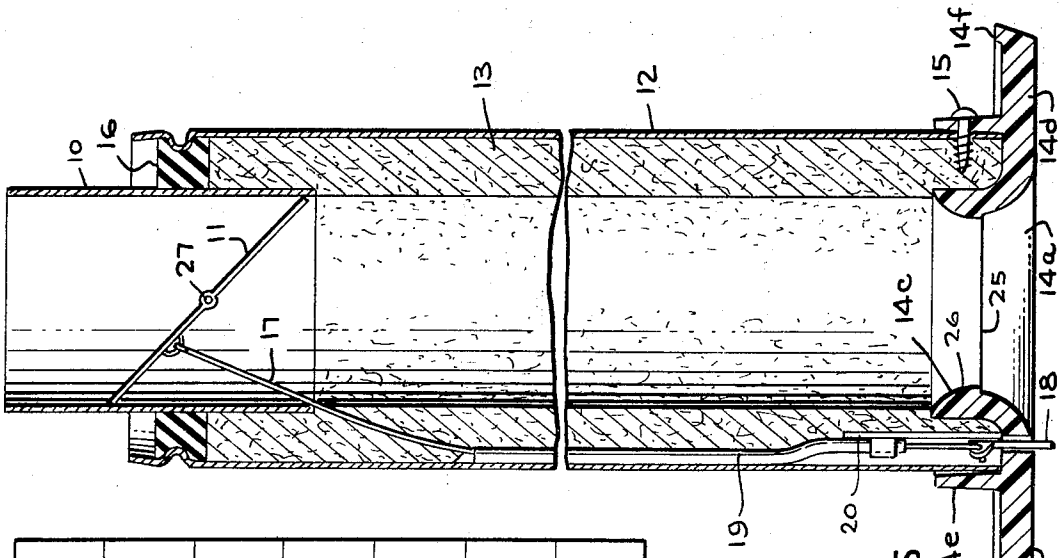

FIG-5

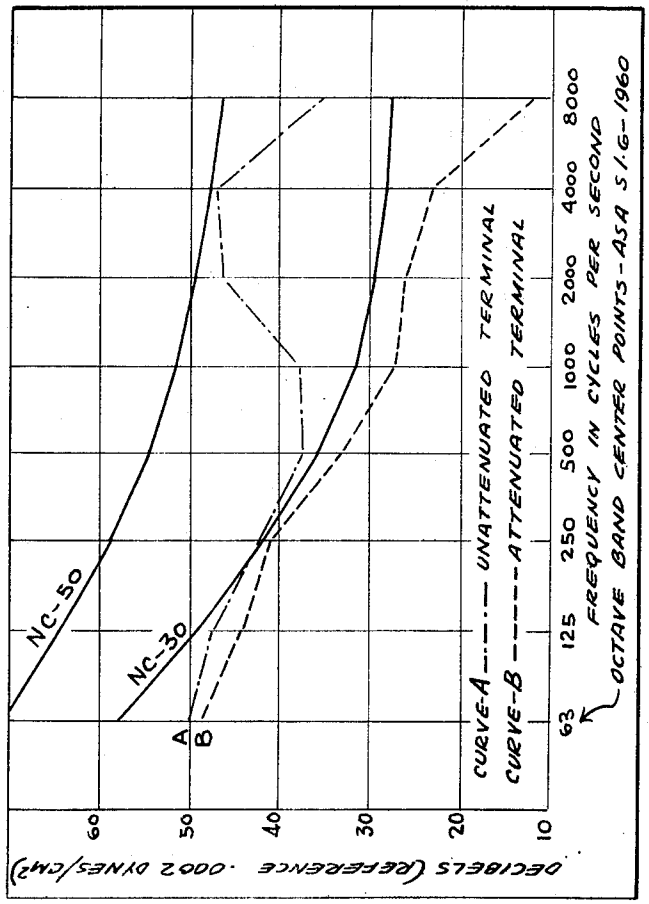

FIG-1

INVENTORS

JOHN J. DIECKMANN &
HAROLD MAWBY

BY

Mason, Fenwick & Lawrence
ATTORNEYS

April 21, 1970 J. J. DIECKMANN ET AL 3,507,354

SOUND ATTENUATING AIR DISCHARGE TERMINAL DEVICE

Filed June 14, 1968 2 Sheets-Sheet 2

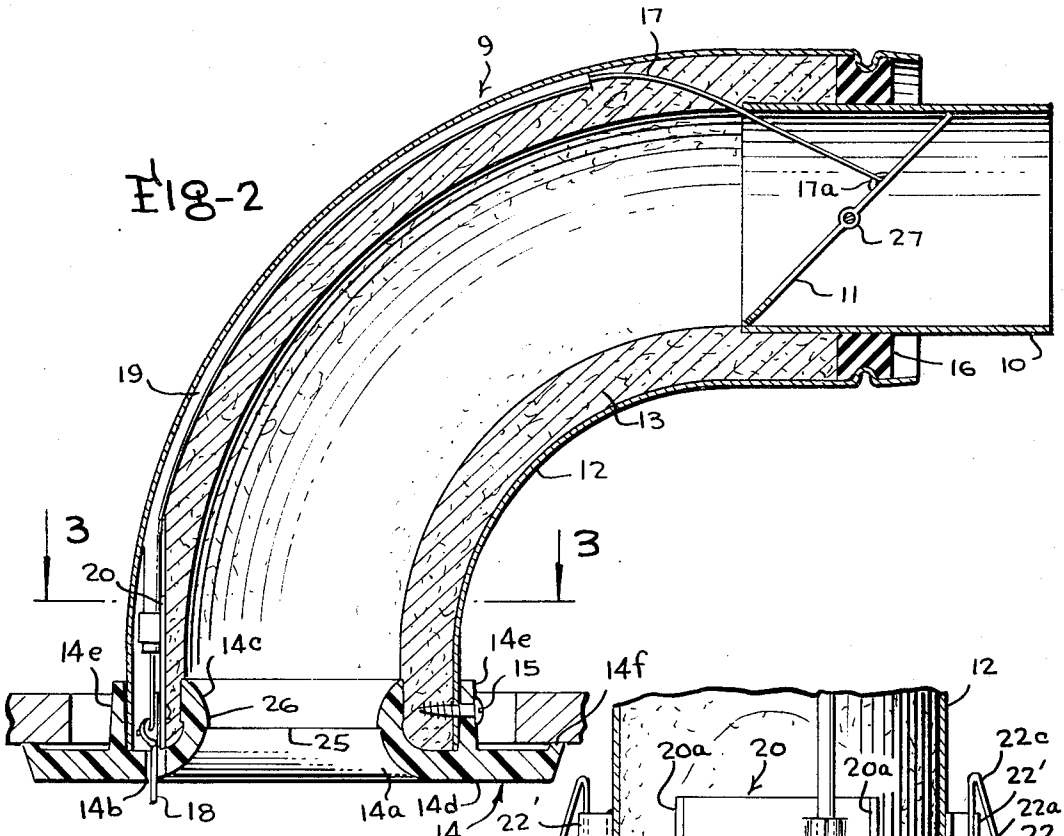

FIG-2

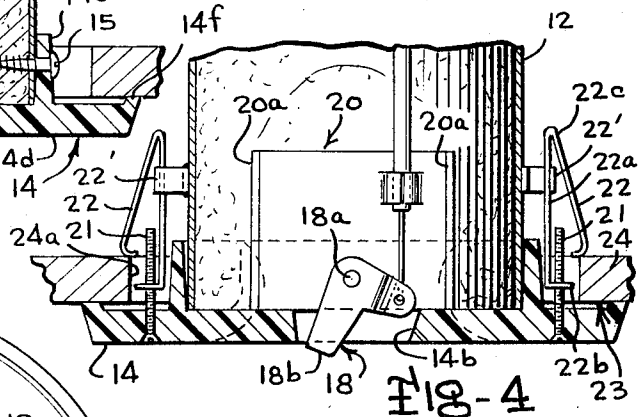

FIG-4

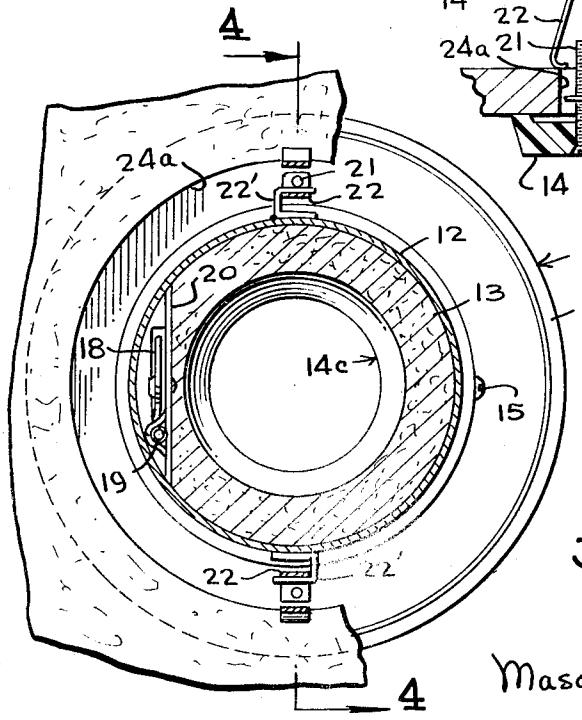

FIG-3

INVENTORS

JOHN J. DIECKMANN &
HAROLD MAWBY

BY Mason, Fenwick & Lawrence

ATTORNEYS

United States Patent Office 3,507,354
Patented Apr. 21, 1970

3,507,354

SOUND ATTENUATING AIR DISCHARGE TERMINAL DEVICE

John J. Dieckmann, Rockingham, Va., and Harold Mawby, Grass Lake, Mich., assignors to Dunham-Bush, Inc., a corporation of Delaware

Filed June 14, 1968, Ser. No. 737,087
Int. Cl. F24f 13/06; F01n 1/24
U.S. Cl. 181—42 10 Claims

ABSTRACT OF THE DISCLOSURE

A sound attenuating air discharge terminal device for air conditioning systems using high velocity air, wherein a tubular liner of sound absorbing material, such as fiber glass formed with a binder, is joined to a terminator nozzle and has its interior surface directly exposed to the air flowing to the nozzle.

The present invention relates to terminal devices for air conditioning systems and more particularly to such terminal devices having integral sound attenuating characteristics, especially for use with high velocity air transmission ducts. Systems using these devices are described in copending application Ser. No. 690,253, "Heating and Cooling System," by John J. Dieckmann, one of the coinventors named in the present application.

BACKGROUND AND OBJECTS OF THE INVENTION

Heretofore, air conditioning systems have been designed to provide heating and/or cooling of spaces to be conditioned by conveying high velocity conditioned air to such spaces through air transmission ducts. An example of such a system is disclosed in the above-identified copending application. Such systems, however, introduce considerable problems of noise attenuation to keep down the noise level inherently generated by movement of the high velocity air through the ducts and through which the conditioned high velocity air is discharged into the spaces to be conditioned.

A primary object of the present invention is to provide a terminal device for high velocity air transmission ducts of air conditioning systems, which terminal device is capable of creating high discharge velocity as, for example, 2000 feet per minute or more, without creating objectionable noise.

An additional object is to provide a terminal device for high velocity air transmission ducts of air conditioning systems, which terminal device has the capability of attenuating noises created upstream of the device.

An additional object is to provide a terminal device of the type described having minimum resistance to air flow and having an essentially round discharge flow configuration.

An additional object is to provide an inconspicuous room terminal device for systems of the type described which is small in size and aesthetically acceptable.

A further object is to provide a device of the type described having means for shutting off the flow of air or adjusting the flow rate without creating objectionable noise.

Still further objectives are to provide a device of the type described which can be installed within a nominal 6-inch joist space commonly used in residential and apartment construction, which can be economically manufactured from readily available materials, and which will meet the requirements of applicable National Fire Protection Association standards.

Other objects, advantages and capabilities of the present invention will become apparent from the following detailed description, taken in conjunction with the accompanying drawings, illustrating two embodiments of the invention.

GENERAL DESCRIPTION OF THE FIGURES

FIGURE 1 is a graph of noise frequency against decibels depicting performance of selected terminal devices in relation to Noise Criteria curves;

FIGURE 2 is a section view through a 90° elbow terminal device embodying the present invention;

FIGURE 3 is a section view taken along the line **3—3** of FIGURE 2;

FIGURE 4 is a vertical section view of the terminal device, taken along line **4—4** of FIGURE 3, and

FIGURE 5 is a vertical section view of a straight form of noise attenuator terminal device.

DETAILED DESCRIPTION OF THE INVENTION

In the field of acoustics, acceptable ambient noise (sound) levels in any particular environment is generally determined by comparison to selected Noise Criteria (NC) curves for frequency bands within the human audible range. Noise is measured by commonly available instrumentation as sound pressure level in decibels for discrete frequency bands designated octave bands where the high frequency limit is twice the low frequency limit. Preferred center point frequencies used in development of this invention were 63, 125, 250, 500, 1000, 2000, 4000 and 8000 c.p.s. as specified in American Standard S1.6–1960. For apartments, hotels, churches, theatres and, more particularly, sleeping areas of homes, the Noise Criteria **30** (NC–**30**) curve has been regarded by those versed in the acoustic art as an acceptable acoustic standard to establish ambient sound pressure levels. Accordingly, the NC–**30** has been selected as the acoustic objective of an acceptable air conditioning system not to be substantially exceeded. Incumbent on the attenuating terminal device of this invention is sufficient attenuation capability to meet NC–**30** curve.

In FIGURE 1, curve A depicts the performance of a typical unattenuated terminal device when connected directly to the high velocity air transmission duct. This configuration can be noted to greatly exceed the NC–**30** curve in the 6th and 7th octave bands approaching NC–**50** and also significantly exceeds NC–**30** in the 5th and 8th octave bands. The performance of a typical attenuated device is depicted on curve B which does not exceed the NC–**30** curve at any point and is significantly below said curve for both the high and low end frequency octave bands.

To meet all usage requirements, we have determined that it is desirable to build our terminal device in two configurations, one with inlet and outlet in a straight line and one in the form of a 90° angle. Performance characteristics of both are essentially alike and design principles are the same. The difference in arrangement is solely for convenience of installation.

Referring to FIGURES 2, 3 and 4, illustrating the elbow type terminal device constructed in accordance with the present invention, the terminal device, indicated generally by the reference character **9**, includes a tubular inlet bushing **10**, for example of cylindrical configuration, for coupling the terminal device **9** to an upstream transmission duct, for example of the type illustrated in said earlier co-pending application Ser. No. 690,253, by slipping the transmission duct over the inlet bushing **10**. A thin-walled enclosing jacket or sleeve **12** encloses a tubular fiberglass liner **13** of annular cross-section, which matches the contour of the enclosing sleeve **12**, and is permanently staked at one end to an annular gasket **16** which fits about a cylindrical inlet bushing **10**. The sleeve **12** is demountably attached at its other end, for example

by means of screws **15** threaded into tapped apertures in the sleeve **12**, to terminator fitting **14** defining the air discharge opening in the floor, ceiling or wall of the room to be served by the conditioned air. The upstream end of the enclosing sleeve **12** may be sealed leak-tight to the enclosing jacket of the supply duct or transmission duct (not shown) by known means such as adhesive coated tape.

The inlet bushing **10** contains provision for pivotally mounting a valve blade **11** therein on a shaft **27** which extends transversely across the bushing **10**. A control cable **17** has one end **17***a* thereof connected to the valve blade **11** and extends through a cable shield **19**, in the form of a small diameter tube, within the enclosing sleeve **12** between the latter and the fiberglass liner **13**, to a location near terminator fitting **14**. The end of the cable shield **19** adjacent the terminator fitting **14** is secured to a lever mount **20**, formed for example of a flat plate arranged in a plane paralleling a diametric plane of the exit orifice **14***a* of the terminator fitting and attached thereto, as by spot welding, along its lateral edges **20***a*. A valve-operating lever **18** is secured to one end of the control cable **17**, and is pivotally mounted, as by rivet **18***a*, shown more clearly in the section view of FIGURE 3, to the lever mount **20** for free rotation about the axis of the rivet **18***a*. The operating lever **18** is located so that the portion **18***b* of the lever **18** protrudes through the exposed face of the terminator fitting **14** alongside the exit orifice **14***a*, so that it can be actuated by the home owner by moving the lever **18** transversely from an open to a closed position as restricted by the slot **14***b* in the terminator fitting.

The terminator fitting **14** is attached to the wall, floor or ceiling **24** of the dwelling space designed to be served by the conditioned air. Its configuration, as best shown in FIGURES 2 and 3, is such that it defines an inner annular neck portion **14***c* defining the discharge opening **14***a*, a circular face plate portion **14***d* joined to and projecting outwardly from the exit end of the neck portion **14***c*, and an outwardly spaced cylindrical flange portion **14***e* projecting from the face plate portion **14***d* in outwardly spaced coaxial relation to the neck portion in the same direction as the neck portion **14***c* and for a sufficient distance from the portion **14***d* to facilitate securement to the sleeve **12**. The face plate portion **14***d* has a circular outer perimeter of a somewhat larger diameter than the flange portion **14***e* and has a short inwardly projecting cylindrical lip **14***f* formed at the perimeter.

This terminator fitting **14** is designed to be inserted in a circular opening cut in a vertical wall, floor or ceiling, hereinafter generally referred to as a boundary wall, of sufficient size to accommodate the neck and flange portions **14***c*, **14***e*, and is conveniently installed in the opening **24***a* by a pair of diametrically oppositely positioned mounting screws **21** and spring toggles **22**, as illustrated in FIGURE 3. The toggles **22** are of flat spring material and comprise an inner leg **22***a* disposed parallel to the axis of the terminator fitting **14**, a short outwardly projecting flange **22***b* at the end of leg **22***a* nearest the terminator fitting flange **14***e*, having a threaded aperture therein into which the screw **21** is threaded, and an outwardly inclined leg **22***c* joined to the leg **22***a* at the other end thereof adapted to be compressed inwardly to fit through the hole **24***a* and having an inwardly curved free end portion to seat against the unexposed side of the boundary wall **24** to clasp the wall between the toggle **22** and the flange portion **14***e* of the terminator fitting **14**, upon tightening of the screws **21**. The toggles **22** are prevented from rotating by channel shaped clips **22'** having an inner flange attached to the enclosing sleeve **12** and an outer flange which extends between the legs **22***c* and **22***a* of the toggles and bears against the latter. It will be noted that the terminator fitting **14** includes a throat section **26** of progressively reducing diameter from the edge of the neck portion **14***c* nearest the inlet bushing **10** to approximately the axial center thereof, this being for the purpose of increasing the terminal velocity of the air, and includes a parting line **25** for plastic molding separation to minimize acoustical interference.

The tubular fiberglass liner **13** in a preferred embodiment employs fiberglass of about .00020 to .00025 inch diameter formed with a suitable low smoke generating binder, such as a phenolic binder, under heat and pressure to a density of about 3 pounds per cubic foot into an elbow shaped tube, for the terminal device of FIGURES 1 to 4, or a straight tube, for the device of FIGURE 5, to provide a tube having an internal diameter of about $1\frac{15}{16}$ inches and an external diameter of about 3 inches. The resultant liner material is equivalent to the material presently marketed by Johns Manville under the tradename, Micro-Lok. This liner **13** has an effective length of not less than one wave length of the lowest frequency of the unattenuated air stream that significantly exceeds acceptable sound pressure levels, for example, not less than about 4½ inches.

The terminal device of FIGURE 5, indicated generally by the reference character **9'** is constructed of the same basic components as the device **9** of FIGURES 2 to 4, designated by the same reference characters employed for the corresponding components of the embodiment of FIGURES 2 to 4, except that the fiber glass liner **13** and enclosing sleeve **12** are straight, rather than elbow shaped, to suit installation conditions where a straight terminal device would be preferable.

The particular noise attenuating terminal device herein described provides a convenient and economical arrangement for appropriate discharge of high velocity conditioned air into the space to be conditioned, which is extremely simple to install and which achieves improved sound attenuation by use of the sound-absorbing tubular fiber glass liner **13** having its interior surface exposed directly and uninterruptedly to the air stream over the whole distance between the inlet bushing **16** and the terminator fitting **14**. By directly exposing the interior surface of the tubular liner **13** to the air stream without the presence of any perforated open mesh inner liner, helix, or other inner liner structure along the interior surface of the liner **13**, sources of air turbulence or disturbance of air flow which would arise from the bounding edges of the perforations of perforated inner liners or from the spaced convolutions of helix liners are eliminated, thus avoiding the noise which would arise from such turbulence or air flow disturbance. The shut-off device provided by the valve blade **11** is also located and designed in such a way as to minimize generation of objectional noise and is disposed upstream of the noise absorbing liner **13** so that any noise generated by the shut-off device is attenuated by the liner **13**.

While but two specific embodiments of the present invention have been particularly shown and described, it will be apparent that other modifications can be made within the spirit and scope of the invention.

What is claimed is:

1. A sound attenuating air discharge terminal device for air conditioning systems, wherein high velocity conditioned air is conveyed by a transmission duct to the space to be conditioned and discharged into the space through a boundary wall of the space predominantly along a discharge axis perpendicular to said bounding surface, comprising a terminal nozzle member of generally round configuration having a face plate portion to be mounted against the surface of the wall facing said space and inner and outer concentric annular flange portions projecting rearwardly from said face plate portion inwardly of the periphery thereof and defining a rearwardly opening annular channel therebetween, said nozzle having a central bore therethrough bounded by said inner flange portion and defining an exit orifice for discharge of the high pressure air into the space, inlet coupling means spaced upstream from the nozzle member relative

to the direction of conditioned air flow to be coupled to the transmission duct, an elongated imperforate tubular sleeve secured at one end to said inlet coupling means and at its other end to said outer flange portion, and an integral tubular annular cross-section liner member of sound absorbing material enclosed within said sleeve and continuously spanning the space between said nozzle member and said inlet coupling means defining an air flow conduit with its interior surface directly exposed to the air flowing therethrough to maintain noise levels arising from conditioned air flow essentially below the Noise Criteria 30 curve.

2. A sound attenuating terminal device as defined in claim 1, wherein said sleeve is an integral molded tubular body of fiber glass formed with a binder under heat and pressure to a density of about 3 pounds per cubic foot.

3. A sound attenuating terminal device as defined in claim 1, wherein said liner has a length of not less than one wave length of the lowest frequency of the unattenuated air stream that significantly exceeds acceptable sound pressure levels.

4. A sound attenuating terminal device as defined in claim 2, wherein said liner has a length of at least four and one-half inches.

5. A sound attenuating terminal device as defined in claim 1, wherein said inlet coupling means is a substantially cylindrical tubular bushing, the interior surface of said annular liner at the upstream end thereof being disposed in coaxially surrounding engagement with a portion of said bushing, and said bushing having an annular gasket externally surrounding the same and secured thereto having substantially the same internal and external diameters as said liner, and means securely fastening said sleeve to said gasket in externally surrounding relation thereto.

6. A sound attenuating terminal device as defined in claim 3, wherein said inlet coupling means is a substantially cylindrical tubular bushing, the interior surface of said annular liner at the upstream end thereof being disposed in coaxially surrounding engagement with a portion of said bushing, and said bushing having an annular gasket externally surrounding the same and secured thereto having substantially the same internal and external diameters as said liner, and means securely fastening said sleeve to said gasket in externally surrounding relation thereto.

7. A sound attenuating terminal device as defined in claim 1, wherein said inlet coupling means comprises a bushing including a valve blade of substantially elliptical peripheral configuration pivotally mounted therein on a transverse diametrically extending shaft for movement between closed and open positions within said bushing, a control cable connected to said valve blade eccentrically of said shaft and extending therefrom substantially along the interface between said liner and sleeve to said nozzle member, and lever means pivoted to said nozzle member having a portion connected to said cable and an actuator portion extending to an exposed position outwardly of said face plate portion for manual regulation of the angular position of the valve blade about said shaft between said open and closed positions.

8. A sound attenuating terminal device as defined in claim 6, wherein said inlet coupling means comprises a bushing including a valve blade of substantially elliptical peripheral configuration pivotally mounted therein on a transverse diametrically extending shaft for movement between closed and open positions within said bushing, a control cable connected to said valve blade eccentrically of said shaft and extending therefrom substantially along the interface between said liner and sleeve to said nozzle member, and lever means pivoted to said nozzle member having a portion connected to said cable and an actuator portion extending to an exposed position outwardly of said face plate portion for manual regulation of the angular position of the valve blade about said shaft between said open and closed positions.

9. A sound attenuating terminal device as defined in claim 1, including resiliently deformable spring toggle members at circumferentially spaced positions outwardly adjacent said outer flange portion each comprising a first elongated leg extending along an axis paralleling the axis of said bore and an outwardly inclining leg projecting toward said face plate portion from an apex juncture with said first leg to be flexibly deformed inwardly toward said axis upon introduction of said flange portions through an opening in said boundary wall and flexibly return outwardly following passage through said opening to engage free end portions of said inclined leg against rear surface portions of said wall and clamp the latter between said free end portion and said face plate portion, and screw means extending through said face plate portion and threadedly coupled to said first leg for adjustably positioning the toggle members axially of said bore.

10. A sound attenuating terminal device as defined in claim 8, including resiliently deformable spring toggle members at circumferentially spaced positions outwardly adjacent said outer flange portion each comprising a first elongated leg extending along an axis paralleling the axis of said bore and an outwardly inclining leg projecting toward said face plate portion from an apex juncture with said first leg to be flexibly deformed inwardly toward said axis upon introduction of said flange portions through an opening in said boundary wall and flexibly return outwardly following passage through said opening to engage free end portions of said inclined leg against rear surface portions of said wall and clamp the latter between said free end portion and said face plate portion, and screw means extending through said face plate portion and threadedly coupled to said first leg for adjustably positioning the toggle members axially of said bore.

References Cited

UNITED STATES PATENTS

2,644,389	7/1953	Dauphinee.	
2,858,760	11/1958	Lathrop.	
3,159,091	12/1964	Schutt	181—50 XR

ROBERT S. WARD, JR., Primary Examiner

U.S. Cl. X.R.

98—40