(No Model.)

C. E. KAYSER.

INK FOUNTAIN FOR PRINTING PRESSES.

No. 590,790. Patented Sept. 28, 1897.

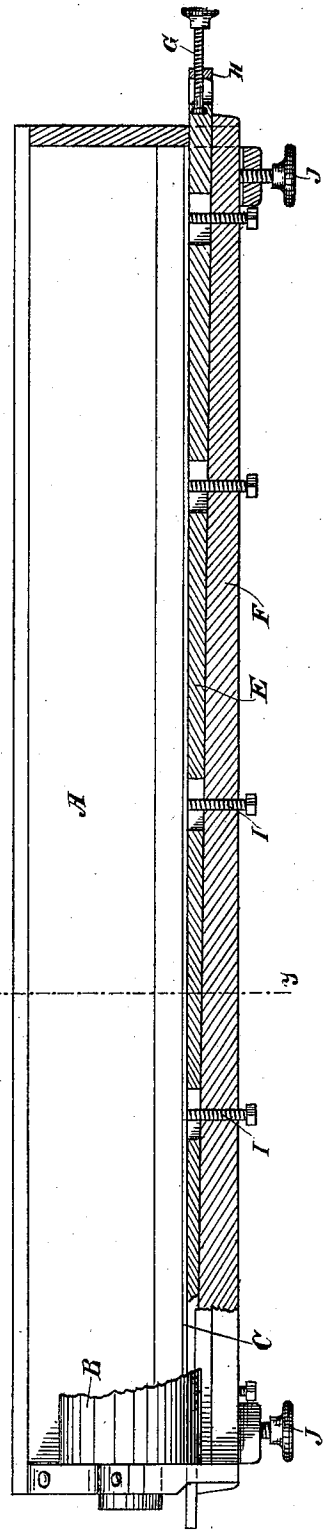

Fig. 1.

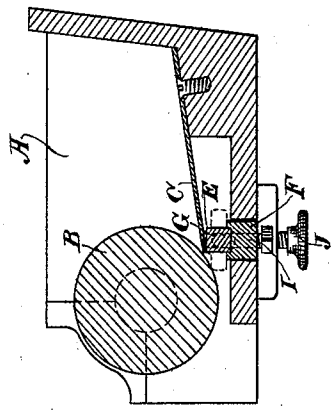

Fig. 2.

Witnesses,
C. A. Snow
H. F. Ascheck

Inventor
Clemens E. Kayser
By Dewey & Co.
Attys

THE NORRIS PETERS CO., PHOTO-LITHO., WASHINGTON, D. C.

UNITED STATES PATENT OFFICE.

CLEMENS E. KAYSER, OF OAKLAND, CALIFORNIA.

INK-FOUNTAIN FOR PRINTING-PRESSES.

SPECIFICATION forming part of Letters Patent No. 590,790, dated September 28, 1897.

Application filed July 16, 1897. Serial No. 644,791. (No model.)

To all whom it may concern:

Be it known that I, CLEMENS E. KAYSER, a citizen of the United States, residing at Oakland, county of Alameda, State of California, have invented an Improvement in Ink-Fountains for Printing-Presses; and I hereby declare the following to be a full, clear, and exact description of the same.

My invention relates to an improvement in ink-fountains such as are adapted to be used in conjunction with printing-presses.

It consists, essentially, in a means for adjusting the blade or scraper with reference to the roller, so that the flow of the ink is regulated, and in details of construction which will be more fully explained by reference to the accompanying drawings, in which—

Figure 1 is a partial longitudinal section of the device, taken through the adjusting-strips. Fig. 2 is a transverse section on line *y y* of Fig. 1.

In distributing ink from the fountain to the point where it is to be used a roller is usually employed, so journaled with reference to the fountain that the ink is carried by the surface of the roller from the fountain to the distributers and thence to the type, and in conjunction with this transmitting-roller a blade is used which acts as a scraper to insure only the proper amount of ink being carried away from the fountain by the roller. Where the fountain is of considerable length and is for large presses, the adjustment of this blade is a difficult matter. It has been customary to make the adjustment by means of a great number of screws extending through the bottom and pressing against the blade, so as to force and hold it up in contact with the roller, and the time which it takes to properly adjust these screws and regulate the position of the blade is very considerable, sometimes amounting to an hour or two.

In my present construction, A is a fountain of any suitable or well-known shape and of a length equal to the width of the surface over which the ink is to be distributed.

B is a roller journaled in the front of the fountain and designed to carry the ink which adheres to it outwardly during its revolutions, this ink being again transferred to distributing-rollers. (Not here shown.)

In order to regulate the amount of ink which is transferred by the roller, I have shown the blade or scraper C, the front edge of which is adapted to press against the roller B, while the rear edge may be secured to the bottom or any suitable or desired point within the fountain, so as to support the blade and allow the front edge to be moved with relation to the roller in any desired manner. As this blade is of considerable length, the elasticity of its edge is such that it requires a careful adjustment with relation to the roller to prevent an undesirable variation in the quantity of ink which will be carried by the roller, and in order to effect this adjustment I have shown an inclined or wedge-shaped bar E, extending beneath the edge of the blade from one end to the other of the fountain, so that the edge of the blade is supported continuously from end to end upon this bar.

The upper surface of the bar is essentially parallel with the face of the roller.

Below the bar E is a second bar F, having a face inclined from end to end correspondingly with the incline or bevel of the wedge-shaped upper bar, so that when the upper bar lies upon it the two inclined faces are in contact, while the upper face of the bar E will, as before stated, be essentially parallel with the face of the roller and the edge of the blade. It will be understood that when the wedges are moved longitudinally the depth or thickness will be increased or decreased, depending upon which way the wedges are moved, and the blade will be correspondingly moved up or down and be brought into closer contact or moved away from the roller to regulate the supply of ink.

In order to operate the device, as before stated, one of the bars E or F is made movable longitudinally by means of a screw G or other equivalent operating device.

In the present case the screw passes through a fixed screw-threaded plate H, so that by turning the screw it is advanced or retracted through this plate.

The inner end of the screw has a swivel-head or other suitable connection with the bar to be moved, so that the advancing of the screw in either direction correspondingly moves the bar, and thus adjusts the blade with relation to the roller, as previously described. By this construction I form a con-

tinuous support for the edge of the blade and am thus enabled to regulate it with perfect exactness from one end to the other.

On cylinder-presses, however, where cuts and heavy type are frequently used, it is necessary to apply more ink at these points, and in order to regulate this I have shown a number of screws I, passing through suitable screw-threaded plates and acting to raise or lower the edge of the blade or scraper C at any point where the variation is to occur. In this construction the screws will pass through the upper wedge-shaped bar, so that their ends may abut against the lower surface of the plate itself, one of the bars E or F being slotted longitudinally, so as to allow of the movement of the bars upon each other without interfering with the action of the screws which operate to adjust parts of the blade independent of the adjustment produced by the wedges.

On ordinary type-forms the device previously described is sufficient without the screws. The lower bar F is also vertically adjustable by screws J beneath each end, so as to adjust the inclined plane for the wedge.

Having thus described my invention, what I claim as new, and desire to secure by Letters Patent, is—

1. The combination with an ink-fountain and a roller journaled to carry the ink therefrom, of a blade one edge of which is retained essentially in contact with the roller, tapering bars adapted to support the edge of the blade, means for moving the bars with relation to each other so as to increase or decrease the thickness, and correspondingly move the blade with reference to the roller.

2. An ink-fountain having a roller journaled and adapted to carry ink therefrom, superposed bars extending longitudinally beneath the roller and tapered from end to end, means for moving these bars with relation to each other so as to increase or decrease the thickness, and a blade having the rear edge fixed within the fountain, and the front edge resting upon the adjusting-bars and adapted to act as a scraper to regulate the amount of ink delivered from the fountain by the roller.

3. An ink-fountain having a roller journaled with relation thereto and adapted to transfer ink from the fountain, a scraping-blade having its front edge formed to contact with the roller and the rear edge fixed within the rear portion of the fountain, inclined or wedge-shaped bars extending longitudinally beneath the edge of the blade, a means for moving one of the bars whereby the other is raised or depressed and the edge of the blade correspondingly moved nearer to or farther from the roller, and independently-acting screws extending upward through the bars with the ends pressing against the blade whereby portions of the blade may be adjusted independently of the general adjustment produced by the bars.

4. An ink-fountain having a roller journaled and adapted to carry ink therefrom, superposed bars extending longitudinally beneath the roller and tapered from end to end, means for moving these bars with relation to each other so as to increase or decrease the thickness, a blade having the rear edge fixed with relation to the fountain and the front edge resting upon the adjusting-bars and adapted to act as a scraper to regulate the amount of ink delivered, and means for producing an independent vertical adjustment of the regulating-bars.

In witness whereof I have hereunto set my hand.

CLEMENS E. KAYSER.

Witnesses:
HERMAN GLAUCH,
EDWARD BERNSTEIN.