March 28, 1950 J. B. DYER 2,502,211

VACUUM BREAKER

Filed June 19, 1948

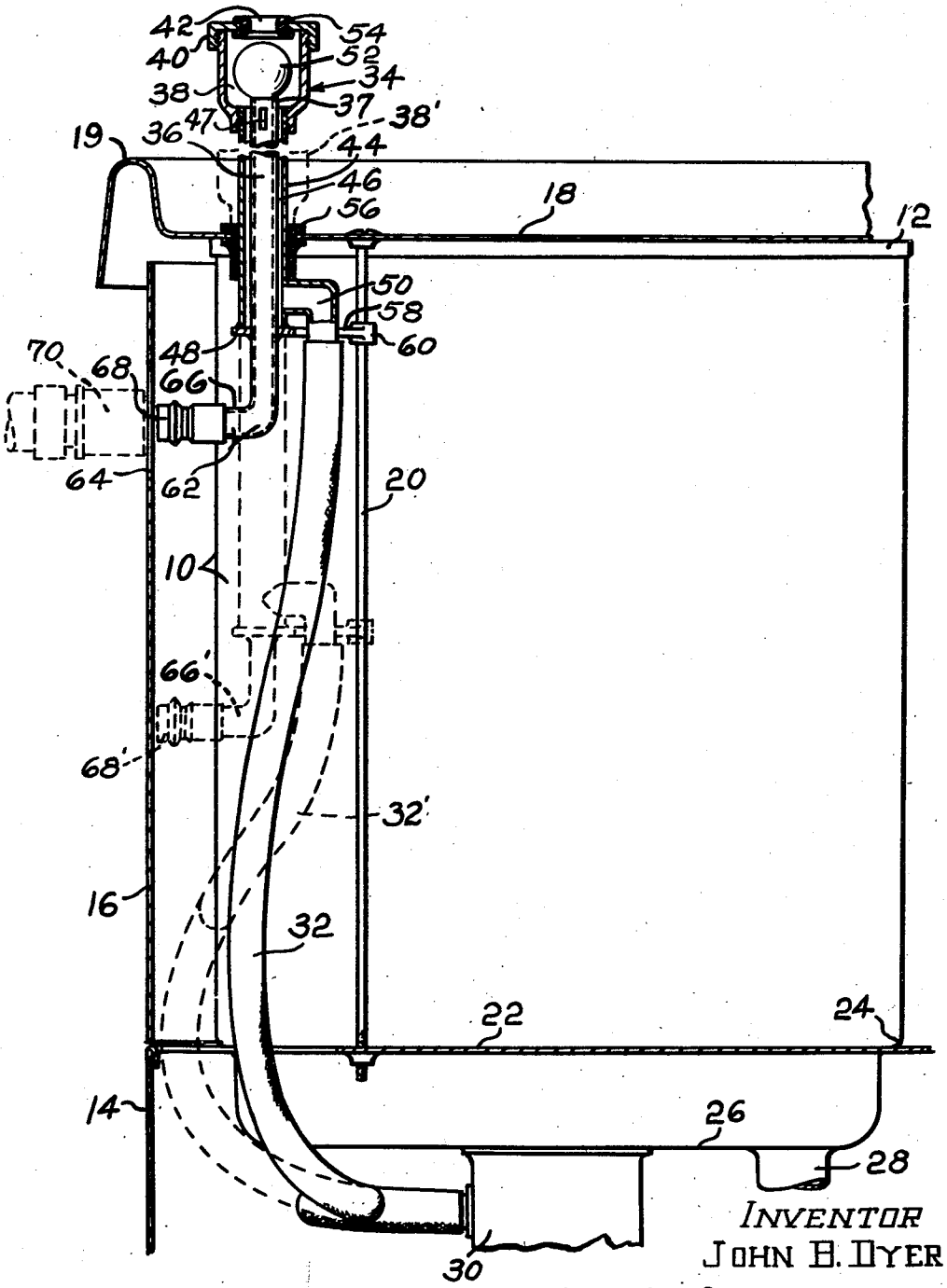

INVENTOR
JOHN B. DYER

BY

ATTORNEY

Patented Mar. 28, 1950 2,502,211

UNITED STATES PATENT OFFICE

2,502,211

VACUUM BREAKER

John B. Dyer, Syracuse, N. Y., assignor to Easy Washing Machine Corporation, Syracuse, N. Y., a corporation of Delaware

Application June 19, 1948, Serial No. 34,121

14 Claims. (Cl. 137—21)

1

This invention relates to vacuum breakers, and more particularly to an apparatus for preventing reverse flow of fluid into a water supply system from apparatus temporarily connected to such supply system.

Municipal water supply systems are generally subject to pressure variation, and because of constrictions at various points in the system, it is possible to create at certain outlets momentary drops in pressure below atmospheric which may cause the induction into the system of impure water which may produce contamination of the water in the supply system. The use of vacuum breakers to prevent this condition is well known, such breakers being so constructed and arranged as to vent the pipe line to atmosphere upon the existence of a sub-atmospheric pressure, so as to break any possible siphoning which might otherwise occur. In such apparatus, the vacuum break or vent is usually placed at a high point in a portion of the piping thereof which would constitute a siphon upon reverse flow conditions being established, and municipal regulations in certain instances specify that the vacuum breaker be located at a substantial height above the level of any container or vat connected to the supply system and constitute in itself a siphon.

The present invention relates to the application of a vacuum breaker to domestic laundry equipment, and provides for a vacuum breaker which is arranged at a proper distance above the apparatus when in operation, but permits the vacuum breaker to be substantially concealed within the apparatus or moved to a low level when not in operation.

An object of the invention is to provide a vacuum breaker in combination with a mobile appliance which is movable from a recessed position to an elevated position, and which is so constructed and arranged as to prevent operation of the apparatus except when in elevated position.

Another object of the invention is to provide a vacuum breaker adapted for mounting in apparatus of the type described, in which the vacuum breaker is slidably mounted and in which the breaker is elevated a sufficient height to assure protection against reverse flow, and which will prevent use of the apparatus except when positioned in such operative position.

A further object of the invention is in the provision of apparatus of the type described which is relatively simple, easy to construct, economical of manufacture, and readily operated

2

by the user of domestic apparatus in which it may be installed.

The above and other novel features of the invention will appear more fully hereinafter from the following detailed description when taken in conjunction with the accompanying drawing. It is expressly understood that the drawing is employed for purposes of illustration only and is not designed as a definition of the limits of the invention, reference being had for this purpose to the appended claims.

In the drawing, the single figure illustrates a fragment of a washing machine in longitudinal section, to which the vacuum breaker has been applied.

Referring to the drawing, there is shown a washing machine of the general type illustrated in application Serial No. 775,211, filed September 20, 1947, and in which there is an extractor tub 10 and a connection made thereto utilizing domestic water supply pressure. It will be appreciated that the extractor tub might equally well be a wash tub or any other receptacle or combination of receptacles, adapted to receive water under pressure by direct connection to a domestic water supply system. The tub shown has an upper rim 12 and is normally open thereabove, and is supported on a suitable frame 14 to which is affixed a side wall 16 and a top deck 18. The top deck is held down against the rim 12 of the tub 10 by one or more tension bolts 20 which extend to a platform portion 22 of the frame 14. The tub 10 is provided with an offset 24 near the bottom 26 thereof, which offset is adapted to engage a corresponding recess in the platform 22. The tub 10 may have a drain outlet 28 which may lead to a valve or to a pump having a discharge hose for delivery of waste fluid into adjoining set tubs having a level approximately that of the rim 12 of the tub 10. The tub 10 has an inlet connection 30 in the bottom thereof to which is connected a flexible supply hose 32.

In normal practice, were a vacuum breaker not to be employed, such supply hose might be led directly to an outlet tap of a domestic water supply system. Under the circumstances of such a direct connection, it will be appreciated that should the tub 10 be partially filled with soapy or waste water while connected to the domestic water supply system with the supply valve open for filling, and should there be a drop in pressure below atmospheric in such supply, waste water would be caused to flow through the supply

pipe 32 in reverse direction into the water supply system, thereby contaminating the water in the supply system.

In order to prevent the possibility of reverse flow in the manner described, the supply conduit 32 is connected to a vacuum breaker generally indicated as at 34. The vacuum breaker comprises an inlet pipe 36 vertically positioned and leading into a chamber 38 having a cap 40 provided with an air inlet 42 formed by an annular resilient grommet 54. The chamber 38 is supported upon an outlet pipe 44 surrounding the inlet pipe 36 to provide an annular conduit 46 which conduit is closed at the lower end by a cap plate 48. Suitable spacing at the upper end is assured by spacing blocks 47. The conduit 46 is provided with a laterally directed fitting 50 to which is connected the supply conduit 32. Within the chamber 38 there is provided a float ball 52 which may be a light hollow metal sphere coated with resilient material such as rubber or neoprene, the same being adapted to seat upon the annular end 37 of the inlet pipe 36 or when raised by the presence of fluid within the chamber 38, seat against the grommet 54.

It will be seen from the foregoing that upon connection of the inlet tube 36 to a domestic water supply system, water is free to flow through the conduit 36 into the chamber 38, floating the ball 52 against the grommet 54, thereby closing the aperture 42. Water under pressure will thereby be caused to flow down the annular conduit 46 into the supply conduit 32 and into the tub 10. Should for any reason there be a reduction in pressure in the inlet pipe 36 to atmospheric pressure or below, the level of water in the chamber 38 will lower by flow thereof down the annular conduit 46 into the tub 10, whereupon the ball will seat upon the end of the inlet pipe 36 and prevent the flow of liquid or air in a reverse direction in the inlet pipe 36. By such means the domestic water supply system is completely cut off and protected against contamination by waste water which may at the time be within the tub 10. The siphon which would otherwise be formed by the annular conduit 46, conduit 36 and connecting chamber 38, is broken by the vent 42.

Since the chamber 38 is above the rim 12 of the tub 10, so that there is a static head causing the water within the chamber 38 to flow into the tub even though the tub be filled to the rim, in practice, it is desirable that this static head be 6 inches or greater in order that there be created within the chamber a substantial subatmospheric pressure in the neighborhood of a quarter of a pound to assure the opening of the vent 42 before any reverse flow from the tub into the water supply system may result. It will be appreciated that a 6 inch difference in level between the height of the end or seat 37 of the inlet pipe 36 and the rim 12 of the tub will create a static pressure difference of approximately one-fourth pound per square inch, which negative pressure is adequate to assure the release of the ball from its elevated position against the grommet 54 regardless of any tendency which the ball might have toward sticking against the grommet.

It will appear that the presence of the vacuum break chamber 38 located at a position more than six inches above the tub rim 12, while considered essential to certain operation of the ball valve, constitutes a protuberance or projection above the machine which may be objectionable from an aesthetic standpoint and which, because

of the exposed nature thereof, may be liable to be struck or otherwise injured during non-use or storage of the machine, and is generally of a hazardous and undesirable nature. In order to obviate the objectionable nature of the break due to its extended projection above the apparatus, there is provided a slidable mounting for the break such as to enable the break to be lowered from its extended position to a position in which the same is substantially completely recessed within the casing of the apparatus.

In the arrangement shown, the top deck 18 is provided with a sleeve 56 in which the tube 44 is slidably positioned. The sleeve may be of rubber or the like, and provide a slight frictional grip to hold the tube in elevated position. The closure plate 48 at the bottom of the tube 44 is provided with an arm 58 which is provided with a boss 60 having an aperture therein slidably received upon the vertical tie rod 20. Additionally, the inlet conduit 46 is provided at its lower end with a right angle bend 62 with a horizontal portion 66 extending toward the side wall 16 of the apparatus. The side wall is provided with an aperture 64 adapted to be aligned with the axis of the horizontal portion 66 of the inlet pipe 36 when the breaker is elevated a distance above the tub such that the upper end of the inlet conduit 36 is a proper and safe distance above the rim 12 of the tub 10. The horizontal portion 66 of the inlet pipe is provided with a quickly detachable male coupling member 68 which may be of the general type illustrated in Scheiwer Patents Nos. 2,135,221; 2,135,222; and 2,135,223, and the aperture 64 is of sufficient size to readily receive a female connecting member 70 adapted to cooperate with the male member 68 to provide a manually attachable and detachable pressure connection to the apparatus. The coupling member 70 is in turn connected to the water supply system.

It will appear from the foregoing that upon detachment of the coupling member 70 from the member 68, the vacuum breaker may be slidably lowered to the position shown in dotted lines, at which lowered position the coupling member is shown at 68', and the horizontal portion of the inlet pipe is indicated at 66'. At the same time, the chamber 38' will be nested within the protective confines of the turned rim 19 of the deck 18; or if desired, the deck could be further recessed to receive the chamber. It will be appreciated that the conduit 32 is flexible and provision is made within the space between the tub 10 and the casing side wall 16 so that the conduit may suitably bend as at 32' within the space provided without any undue strain thereto.

When the vacuum breaker is lowered below the position shown in full lines, the male coupling member 68 is disaligned from the aperture 64 to prevent connection to a water supply system. Connection to a water supply system is thereby prevented except when the break is elevated to a height sufficient to afford proper protection.

The ball valve shown operates quickly upon slight negative pressure, and may be varied in form, it being an essential that the valve function upon the existence of negative pressure, and either seal the vent or the inlet pipe. Sealing of the inlet pipe is preferable, since even though the vent would break the siphon and prevent the lifting and flow of water into the inlet, it is better that air be not admitted to the water supply line.

The side wall 16 positively prevents the con-

nection of the apparatus to the domestic supply system except when suitable precaution is taken by elevating the break to its proper level, and the break cannot be lowered from the proper level except upon the detachment of the coupling member 70 from the break-carried coupling member 68. It will be understood that the form of vacuum breaker, the form of the coupling, and the manner of guarding against connection except when the vacuum breaker is in safe operating position may be varied to suit the many different apparatus to which the invention may be applied.

Although a single form of the invention has been illustrated and described, it is to be understood that the invention is not limited thereto. As various changes in the construction and arrangement may be made without departing from the spirit of the invention, as will be apparent to those skilled in the art, reference will be had to the appended claims for a definition of the limits of the invention.

What is claimed is:

1. In combination, an appliance utilizing water under pressure, having a deck and side skirt, a vacuum breaker slidably mounted in an aperture in said deck for elevation of the active portion of the breaker a regulation distance above the deck, an inlet coupling member carried by said breaker located below the deck and adjacent said side skirt, and an aperture in said side skirt positioned for alignment with said coupling when said breaker is elevated said regulation distance, and a detachable coupling member adapted to be inserted through said aperture and coupled with said first named coupling member.

2. In combination, an appliance utilizing water under pressure from a water pressure supply system, having a side wall, a vacuum breaker including a siphon passage composed of concentric tubes and having a venting means near the top movably mounted with respect to said wall for movement of the breaker from an inoperative position to an operative position, an inlet coupling member carried by said breaker located adjacent said side wall, and an aperture in said side skirt positioned for alignment with said coupling when said breaker is in operative position, said aperture being of a size to receive a detachable coupling member adapted to be inserted through said aperture and coupled with said first named coupling member.

3. In combination, an appliance utilizing water under pressure from a water pressure supply system, having a wall, a vacuum breaker including a siphon passage and venting means near the top movably mounted with respect to said wall for elevation of the venting means of the breaker a predetermined distance above the appliance, an inlet coupling member carried by said breaker located adjacent said wall, and an aperture in said wall positioned for alignment with said coupling when said breaker is elevated said predetermined distance, and a detachable coupling member adapted to be inserted through said aperture and coupled with said first named coupling member.

4. In combination, an appliance utilizing water under pressure from a water pressure supply system, having a side wall, a vacuum breaker including a siphon passage and venting means near the top thereof slidably mounted with respect to said side wall for elevation of the venting means of the breaker a predetermined distance above the appliance, an inlet coupling member carried by said breaker located below and adjacent said side wall, and an aperture in said side wall positioned for alignment with said coupling when said breaker is elevated said predetermined distance, and a detachable coupling member adapted to be inserted through said aperture and coupled with said first named coupling member.

5. In combination, an appliance utilizing water under pressure from a water pressure supply system, having a side wall, a vacuum breaker including a siphon passage and venting means near the top thereof movably mounted with respect to said wall for elevation of the venting means of the breaker a predetermined distance above the appliance, an inlet coupling member carried by said breaker located adjacent said side wall, and an aperture in said side wall positioned for alignment with said coupling when said breaker is elevated said predetermined distance, said aperture being of a size sufficient to permit the insertion of a detachable coupling member therethrough to be coupled with said first named coupling member.

6. In a vacuum breaker, in combination, an upright tubular member having inlet and outlet passages therein, a float chamber positioned at the upper end of said tubular member, a float in said chamber, a relief port in a wall of said chamber, inlet and relief port seats in said chamber adapted to be alternately closed by said float in response to the presence or absence of float-supporting liquid in said chamber, a support for said member permitting substantial movement thereof from an inoperative position to an operative position, a coupling element carried by the member and connecting with said inlet passage, and a frame member secured to said support having a coupling receiving aperture therein located for alignment with said member carried coupling element when said member is in operative position.

7. In a vacuum breaker, in combination, an upright tubular member having inlet and outlet passages therein, a float chamber positioned at the upper end of said tubular member, a float in said chamber, a relief port in a wall of said chamber, inlet and relief port seats in said chamber adapted to be alternately closed by said float in response to the presence or absence of float-supporting liquid in said chamber, a support for said member providing sliding movement thereof from an inoperative position to an operative elevated position, a coupling element carried by the member and connecting with said inlet passage, and a frame member secured to said support having a coupling receiving aperture therein located for alignment with said member carried coupling element when said member is in operative position.

8. In a vacuum breaker, in combination, an upright tubular member having an inlet passage coaxially arranged therein and forming an annular outlet passage, a float chamber positioned at the upper end of said tubular member, a float in said chamber, a relief port in the top wall of said chamber adapted to be closed by said float when sustained by liquid in said chamber, an inlet port seat in said chamber on the end of said inlet passage adapted to be closed by said float in response to the absence of float-sustaining liquid in said chamber, a support for said member providing sliding vertical movement thereof from an inoperative position to an elevated operative position, a coupling carried by the member and connecting with said inlet pas-

sage, and a frame member secured to said support having a coupling receiving aperture therein located for alignment with said member carried coupling when said member is in operative position.

9. In a vacuum breaker, in combination, an upright tubular member having an inlet passage coaxially arranged therein and forming an annular outlet passage, a float chamber positioned at the upper end of said tubular member, a float in said chamber, a relief port in said chamber adapted to be closed by said float when sustained by liquid in said chamber, an inlet port seat in said chamber on the end of said inlet passage adapted to be closed by said float in response to the absence of float-sustaining liquid in said chamber, a support for said member in the form of a deck having an aperture therethrough and a sliding mount for said member providing for movement from an inoperative position to an elevated operative position, a coupling carried by the member and connecting with said inlet passage, and a side wall member secured to said support having a coupling receiving aperture therein located for alignment with said member carried coupling when said member is in operative position.

10. In a vacuum breaker, in combination, an upright tubular member having inlet and outlet passages therein, a float chamber positioned at the upper end of said tubular member, a float in said chamber, a relief port in a wall of said chamber, inlet and relief port seats in said chamber adapted to be alternately closed by said float in response to the presence or absence of float-supporting liquid in said chamber, a support for said member in the form of a deck having an aperture therethrough and a sliding mount for said member providing for movement from an inoperative position to an elevated operative position, a coupling carried by the member and connecting with said inlet passage, and a side wall member secured to said support having a coupling receiving aperture therein located for alignment with said member carried coupling when said member is in operative position.

11. In combination, an appliance having a vat for filling by direct connection to a water system, a frame supporting said vat, a vacuum break movably mounted on said frame for elevation of the active portion of the break a regulation distance above the vat, an inlet coupling member carried by said break movable with respect to the frame upon movement of the active portion to said regulation distance above the vat, guard means carried by said frame adjacent said coupling for preventing connecting a source of water to said coupling when the active portion of said break is below the regulation distance above said vat, an aperture in said guard positioned for alignment said coupling when said break is elevated said regulation distance, and a detachable coupling member adapted to be inserted through said aperture and coupled with said first named coupling member.

12. In combination, an appliance utilizing water under pressure, having a deck and side skirt, a vacuum break movably mounted in said deck for elevation of the active portion of the break a regulation distance above the deck, an inlet coupling member carried by said break located below the deck and adapted to be moved

to a position adjacent said side skirt upon movement of the active portion to said regulation distance above the deck, and an aperture in said side skirt positioned for alignment with said coupling when said break is elevated said regulation distance, and a detachable coupling member adapted to be inserted through said aperture and couple with said first named coupling member, said detachable coupling member acting to prevent movement of said break from its elevated position, while attached to said break carried coupling member.

13. In a vacuum break, in combination, an upright tubular member having concentric inlet and outlet passages therein, a float chamber positioned at the upper end of said tubular member and forming an extension of the outer passage, a float in said chamber, a relief port in the top wall of said chamber, inlet and relief port seats in said chamber aligned substantially with said member and adapted to be alternately closed or opened by said float in response to the presence of float supporting liquid in said chamber, a sliding support for said member permitting substantial movement thereof from an operative position to an inoperative position, a sliding guide for said member, a coupling carried by the member and connecting with said inlet passage, and a frame member secured to said support having a coupling receiving aperture therein located for alignment with said member carried coupling when said member is in operative position, said member preventing access to said member carried coupling when said member is in inoperative position.

14. In combination, an appliance utilizing water under pressure having a vat and mounting structure, a vacuum breaker movably mounted upon said mounting structure for elevation of the active portion of the breaker a regulation distance above the vat, a connection from the vacuum breaker to said vat, an inlet coupling member carried by said breaker below the active portion thereof, and guard means carried by said structure having an opening for alignment with said coupling when said breaker is elevated said regulation distance, and a detachable coupling member adapted to be inserted through said opening and coupled with said first named coupling member, said last named coupling member cooperating with said guard means to prevent movement of said breaker from an elevated position.

JOHN B. DYER.

REFERENCES CITED

The following references are of record in the file of this patent:

UNITED STATES PATENTS

Number	Name	Date
1,674,365	Hoitmeister	June 19, 1928
1,682,351	Rogers	Aug. 28, 1928
1,840,961	Kuenzer	Jan. 12, 1932
2,250,291	Boosey	July 22, 1941
2,250,974	Stoddard	July 29, 1941
2,252,078	Kohlmeyer	Aug. 12, 1941
2,412,760	Svirsky	Dec. 17, 1946

FOREIGN PATENTS

Number	Country	Date
32,593	Austria	of 1908