April 17, 1956 C. P. ANDERSON 2,742,132

RIBBON FEEDING AND REVERSING MECHANISM

Filed Oct. 16, 1950 2 Sheets-Sheet 1

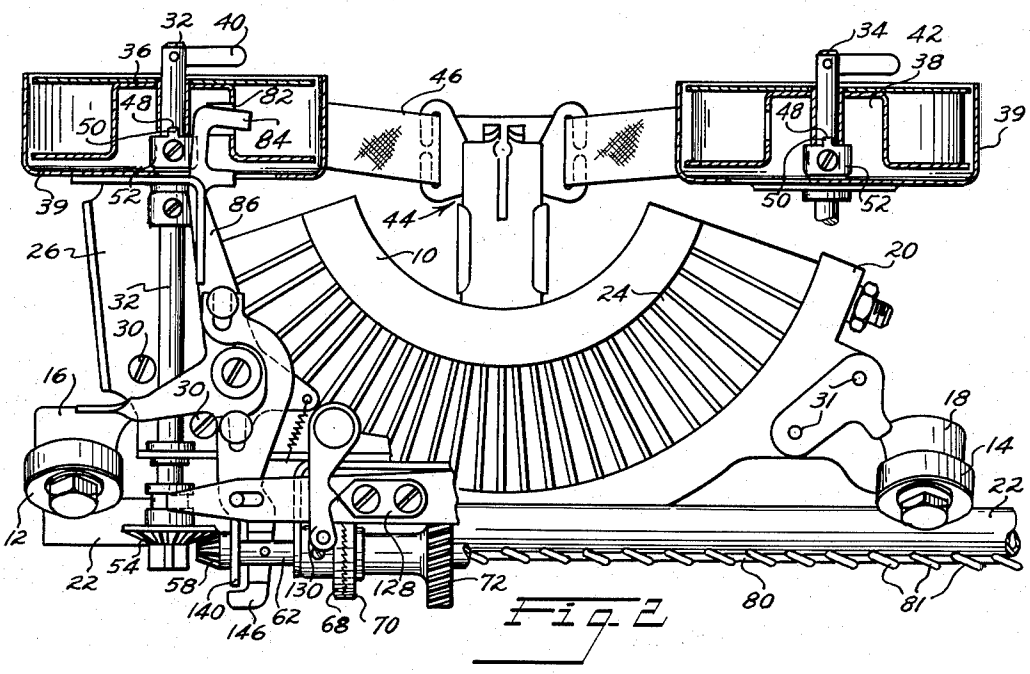


Fig. 2

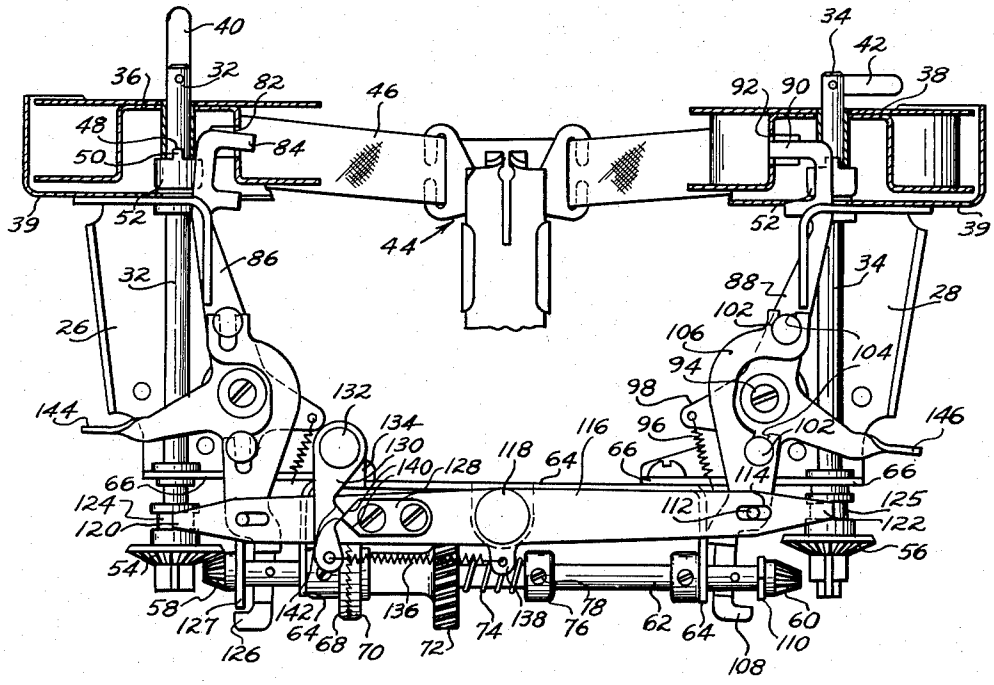


Fig. 1

INVENTOR

CARL P. ANDERSON

BY Strauch, Nolan & Diggins

ATTORNEYS

April 17, 1956 C. P. ANDERSON 2,742,132

RIBBON FEEDING AND REVERSING MECHANISM

Filed Oct. 16, 1950 2 Sheets-Sheet 2

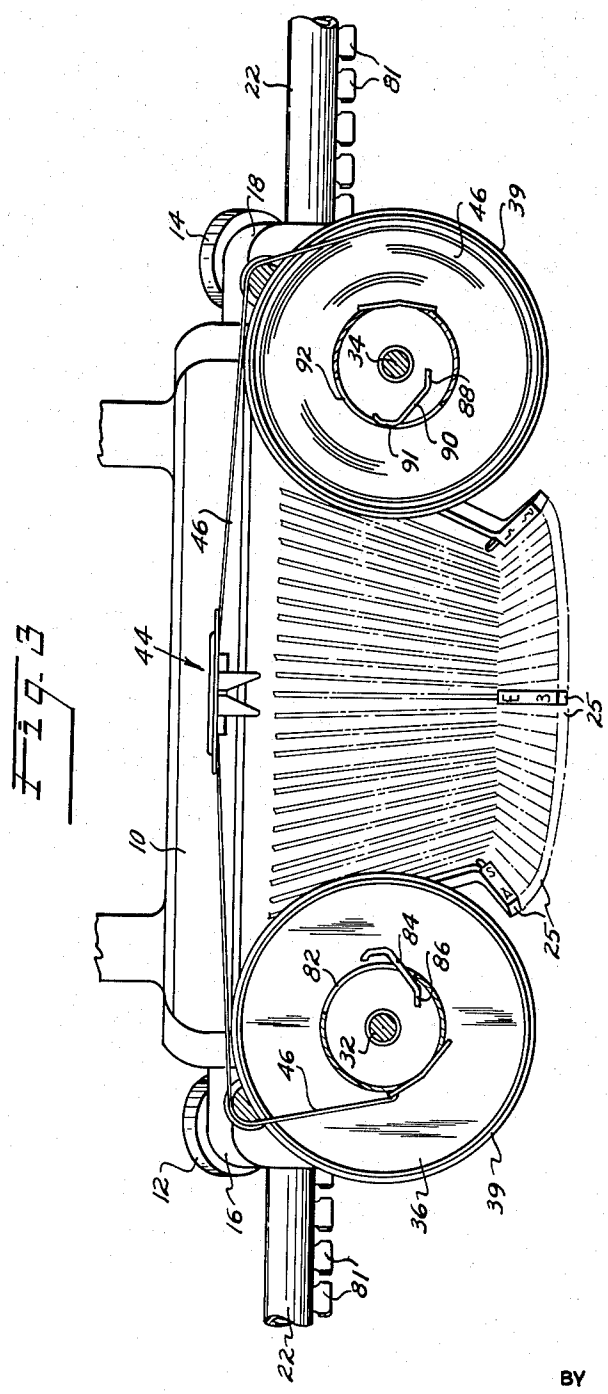


Fig. 3

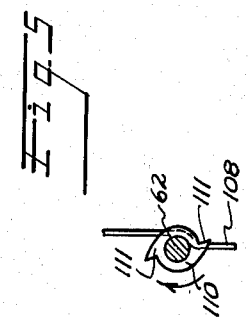


Fig. 5

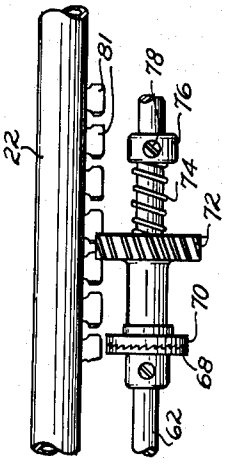


Fig. 4

INVENTOR
CARL P. ANDERSON
BY
Strauch, Nolan & Diggins
ATTORNEYS

United States Patent Office 2,742,132 Patented Apr. 17, 1956



2,742,132

# RIBBON FEEDING AND REVERSING MECHANISM

Carl P. Anderson, Highland Park, Ill., assignor to Kleinschmidt Laboratories, Inc., Deerfield, Ill., a corporation of Delaware

Application October 16, 1950, Serial No. 190,426

17 Claims. (Cl. 197—160)

This invention relates to typewriting machines and particularly to an automatic ribbon feed and reversing mechanism for telegraph printers in which the ribbon feed and reversing mechanism is moved across the printed page with the printing mechanism.

In machines of this class it is desirable to provide uniformly printed impressions, and to accomplish this it is necessary that the inking or typing ribbon be uniformly used over its entire length and that provision be made for reversing the feeding movement of the ribbon when it has been substantially all wound on one spool.

In the printers of the prior art the ribbon feeding and reversing mechanism has generally been connected to the prime mover of the machine. This necessitates many complex parts adding to the weight and bulk of the printer, and often making the ribbon mechanism difficult to get at for adjustment or replacement of parts.

In the invention embodied herein the ribbon feeding and reversing mechanism is not connected to the prime mover of the printer but derives its operative movement from the character spacing movement of a movable type carriage. This novel construction eliminates most of the complex and complicated parts which operate the ribbon mechanisms in prior art machines. In addition, the ribbon mechanism of the invention may be built as a unit for ready attachment to the movable carriage of any type of printer, and may be mounted so that it is readily accessible for any necessary adjustment or replacement of the ribbon spools. The ribbon mechanism embodied herein is also provided with a novel reversing arrangement which is completely automatic and yet is of simple construction using few parts.

With these and other considerations in view it is a primary object of this invention to provide novel and unique means in a typewriter of the class described for feeding the inking ribbon and for automatically reversing the feed while the printing and associated ribbon feed mechanism is moved across the printed page.

Another object of this invention is to provide in a typewriter having a movable type bar carriage a ribbon feeding and reversing mechanism which derives its operating power as an incidence of the character spacing movement of the type bar carriage, thereby reducing the necessary wearing parts and decreasing the weight of the carriage.

Another object of this invention is to provide in a typewriter a ribbon feeding and reversing mechanism carried on a movable carriage which mechanism comprises a gearing arrangement actuated by the spacing movement of the carriage to operate the ribbon feed drive.

A further object of this invention is to provide in a ribbon feeding and reversing mechanism supported on a movable carriage a gear and clutch arrangement for feeding the ribbon as the carriage is moved for character spacing but which arrangement is disconnected by the clutch when the carriage is returned to its starting position.

Another object of this invention is to provide an inking ribbon feeding and reversing device which may be constructed as a unit and quickly and easily installed on or removed from the typewriter.



Still another object of this invention is to provide a ribbon reversing mechanism which is controlled by the available unused supply of ribbon rather than by the strain or pull exerted upon the ribbon.

For a more complete understanding of the invention reference may be had to the following detailed description taken in conjunction with the accompanying drawings, in which like reference characters in the different views represent like parts, and in which:

Figure 1 is a front elevation of the ribbon feeding and reversing mechanism assembled as a unit structure;

Figure 2 is a front elevation of part of the ribbon feeding mechanism mounted on a movable carriage;

Figure 3 is a plan view of part of the ribbon feeding device and movable carriage with the upper part of the spools cut away;

Figure 4 is a plan view of the gearing and clutch arrangement of the invention; and

Figure 5 is a detail elevation of the ribbon reversing cam and cam follower arrangement.

*Ribobn feeding mechanism*

Referring to the drawings, and more particularly to Figure 1, a ribbon feeding and reversing device is shown as a unit structure in which the inking or typing ribbon and the ribbon supply spools somewhat resemble the ribbon mechanism of most standard typewriters. Figure 2 shows the unit structure mounted upon a movable carriage of the type to be reciprocated by power means in front of a stationary platen holding a paper upon which the received telegraphic message is to be printed. As is well known in the art, such movable carriages are arranged to be intermittently operated as characters are printed upon the paper to properly space the printed characters and words, and when the end of the line is reached to be returned to the start of the next line in one continuous operation.

Figure 2 illustrates such a movable carriage **10** supported on rollers **12** and **14** fixed to axles respectively secured in hub extensions **16** and **18** of the carriage frame **20**. A rail **22** is secured to the frame of the printer in any suitable manner to coact with the rollers **12** and **14** which are arranged in pairs and engage opposite sides of the rail to support the weight of the movable carriage **10**. Other rollers which are not shown may bear against other portions of the printer to help support and guide the carriage. A type bar segment or comb guide **24** is a part of the carriage **10** and supports and aligns the usual type bars **25** of the printer as shown in Figure 3. The ribbon feeding and reversing mechanism is a complete unit as shown in Figure 1. It may be assembled as a unit to facilitate its attachment to and detachment from any suitable typewriter. When in place on a machine the ribbon supply spools are located near the top and front where they are easily accessible for adjustment or removal. The supporting members or brackets **26** and **28** of the unit are secured to the carriage frame **20** by screws **30** which engage tapped holes **31** in the frame. Brackets **26** and **28** support vertically disposed spindles **32** and **34** upon which are placed, respectively, ribbon supply spools **36** and **38** which fit in cup-shaped shields **39**. Clips **40** and **42** are pivoted in the ends of the spindles **32** and **34** and serve to removably secure the spools **36** and **38** in place. Coiled springs (not shown) may be located within the spindles to maintain the clips in either position shown in Figure 1. A ribbon guide, generally indicated at **44**, is operatively secured to the carriage **10** in any suitable manner and serves to guide the inking ribbon **46** past the printing position and between the type pallets and the printing platen. It may also serve to lift the ribbon **46** for the printing operation and then lower it so that the printed matter may

be seen, as is customary in many printers of the prior art.

The ends of the ribbon **46** are detachably secured to the ribbon supply spools **36** and **38**, the hub portions of which are notched at **48** to receive projections **50** formed on collars **52** rigidly secured to spindles **32** and **34** so that the spools **36** and **38** are respectively rotatable with the spindles **32** and **34**. Spindles **32** and **34** pass all the way through the brackets **26** and **28** and are provided at their lower ends with bevel gears **54** and **56** respectively adapted to mesh, but not at the same time, with the pinion gears **58** and **60** rigidly secured to the ends of a drive shaft **62** supported in a yoke **64** secured to extensions **66** of the supporting members **26** and **28**. One set or the other of these gears is always in engagement. The drive shaft **62** is rotated by a jaw clutch which has a driven member **68**, Figures 1 and 4, secured to the shaft **62** in any suitable manner as by a set screw and a driving member **70** fastened to the hub portion of an helical gear **72** slidably mounted on the shaft **62** and adjustably positioned with respect to the driven member **68** by a spring **74** and a collar **76** positioned on the shaft **62** by a set screw **78**. The helical gear **72** engages a spiral rack **80**, Figure 2, fastened on the bottom of the rail **22**. If desired, the rack **80** may be formed as an integral part of the rail.

Rack **80** has a plurality of teeth **81** formed at an angle to the longitudinal axis of the rack so that in effect, they form a spiral or helical gear which meshes with the helical gear **72** to drive shaft **62** as the carriage **10** moves to the right for the spacing of successive characters. The movable carriage **10** may be driven by any suitable means, but is particularly adapted for use with the carriage advancing means disclosed in copending application Serial No. 769,664, filed August 20, 1947, by E. E. Kleinschmidt, now Patent No. 2,606,641, in which an electric motor is operably connected to the movable carriage to intermittently move it to the right as successive characters are printed. Each such character spacing movement causes the helical gear **72** to engage one of the teeth **81** on the rack **80** and be rotated a slight degree to turn the jaw clutch members **70** and **68** and the drive shaft **62**. When gears **58** and **54** are in engagement, as shown in Figures 1 and 2, spindle **32** and ribbon supply spool **36** will be rotated to wind up part of the ribbon **46** pulling a small amount through the guide **44** each time a character is printed. During this process the other ribbon supply spool **38** idles and unwinds a like amount of the ribbon **46**.

It is to be noted that the ribbon feeding mechanism is not connected to the prime mover of the telegraph printer as is customary in machines of the prior art but derives its operative movement as incidental to the character spacing movement of the moveable carriage. As mentioned hereinbefore, such an arrangement eliminates the many cumbersome and complicated parts heretofore provided in machines of the prior art to furnish power for operating the ribbon feeding mechanism.

When the carriage **10** is moved to the left to start a new line of printing, the helical gear **72** rotates in a direction opposite to that described above. Due to the lateral friction induced on the gear **72** by the rack **80** and teeth **81** on the return movement of the carriage, and to the construction of clutch members **68** and **70**, no driving action will take place but instead member **70** will slip over the teeth of member **68** and slide on shaft **62** to compress spring **74** which normally tends to keep the clutch members **68** and **70** engaged. As soon as the carriage **10** has reached the position at the start of a new line, and the backward movement of the carriage and helical gear **72** ceases, the spring **74** will force clutch member **70** into engagement with member **68** to drive the ribbon feed mechanism when the carriage again starts to the right.



*Ribbon reversing mechanism*

When the inking ribbon **46** is wound substantially entirely on one spool the direction of feeding the ribbon is reversed automatically to rewind the ribbon on the then empty spool. The reversing mechanism is set into operation when the last turn of the ribbon is unwound from the paying-out spool by the pivoting of a sensing lever which then protrudes through a window in the spool, and is completed by a camming action which connects the driving means to the empty spool. As shown in Figure 1 the supply of ribbon **46** on spool **36** has just been exhausted and the mechanism has just been shifted to reverse the direction of feeding movement of the ribbon **46** by winding it upon spool **36**. The core of the ribbon spool **36** has a cut-out portion or window **82**, Figures 1, 2 and 3, extending partially around its circumference through which the angularly displaced end **84** of a sensing lever **86** is permitted to protrude when the last turn of the ribbon **46** has been unwound from the spool **36**. So long as one turn of ribbon is on the spool the sensing lever is retained in the position shown for the right-hand sensing lever **88** associated with spool **38** in which the end **90** is held in the window **92**. The end **90** has a curved back portion **91** which is shown in Figure 3. This portion **91** bears against the ribbon **46** without injuring it. The end **84** of sensing lever **86** is similarly shaped to serve corresponding purposes. The first turn of the ribbon **46** on the spool **36** will place the sensing lever **86** in the same relative position as the sensing lever **88** is shown in Figure 1. The ribbon **46** will then continue to wind on the spool **36** until the last turn of the ribbon **46** is removed from the window **92** at which time the end **90** will pass through the window **92** and the lever **88** will pivot on the post **94** under the influence of a spring **96** secured under tension between an ear **98** on the sensing lever **88** and the bracket extension **66**.

Affixed to the sensing lever **88** are studs **102** which fit loosely in slots **104** formed in the legs of a substantially U-shaped portion **106** of a cam follower **108**. The pivot post **94** is located between the legs of U-shaped member **106** and is so arranged with respect thereto and to the studs **102** and notches **104** that when the sensing lever **88** pivots about the post **94** this pivoted movement will be transferred to the cam follower **108** which will move to the right as viewed in Figure 1 until it is under the cam **110**, Figures 1 and 5, secured to the drive shaft **62**. The cam **110** is formed with two lobes **111** diametrically opposite each other so within the next half revolution of the drive shaft **62** one of the lobes will engage the cam follower **108** which will slide on the studs **102** and be moved downwardly. A pin **112** is fixed in the cam follower **108** and enters a slot **114** in a beam **116** pivoted substantially at its center on stud **118** secured in a portion of the support yoke **64**. The downward movement causes the beam **116** to rock on the pivot **118** in a clockwise direction so that the beam ends **120** and **122** which respectively engage annular collars **124** and **125** slidably keyed to the vertical spindles **32** and **34** cause the gears **54** and **58** to disengage and the gears **56** and **60** to engage. The shifting of the gears disconnects the drive shaft **62** from the spindle **32** and connects it to spindle **34** whereupon the then empty spool **38** becomes the take-up spool. As soon as one layer of ribbon **46** is wound upon the spool **38** and the sensing lever end **90** is pushed back out of the window **92**, the sensing lever **88** pivots to move the cam follower **108** out of the path of the cam **110** and into the position shown in Figure 1 of the drawings. Thereafter, when the last layer of ribbon **46** is unwound from spool **36** the sensing lever **86** will pivot its cam follower **126** into the path of left-hand cam **127** which will move the mechanism back into the position shown in Figure 1 to repeat the cycle.

The spindles and gears are held in the position to which they are shifted by a detent mechanism which also

imparts a snap action to the movement of the beam **116** to facilitate the action. The detent mechanism consists of a pointed latch plate **128** suitably fixed to the beam **116** and a detent **130** pivoted on a stud **132** secured in an arm **134** of the yoke **64**. To the lower end of detent **130** is fastened one end of a tensioned spring **136** which has its other end fastened to a projection **138** on the yoke **64**. The spring **136** is normally under sufficient tension to maintain the detent **130** against the plate **128** and prevent the unauthorized rocking of the beam **116**. However, the drive shaft cams **110** and **127** in rocking the beam **116** overcome the spring **136**, and the angular faces **140** on the plate **128** and **142** on the detent **130** move the detent to the left as shown in Figure 1 to permit the points of the detent and plate to slide past each other. The additional tension thereby placed on the spring **136** is sufficient to cause a snap action of the beam **116** into its new position to assure the positive disengagement of one set of gears and the positive engagement of the other set of driving gears. The drive shaft cams **110** and **127** each have two lobes which are diametrically opposed, and the cams are so positioned on the shaft **62** that the lobes on cam **110** are at a 90° angle with respect to the lobes on cam **127**. This is necessary to prevent blocking or binding of the shift mechanism.

Handles **144** and **146** are formed on the sensing levers **86** and **88** respectively to permit the removal of the associated ribbon supply spool from the spindle. Depressing the handle **144**, for instance, pivots the lever **86** and removes the end **84** from the window **82**; then placing the clip **40** in its upright position will permit the removal of the ribbon spool from the spindle. The action of the handle **146** and its associated parts is similar to that just described.

From the foregoing disclosure it is readily apparent that I have provided a novel and unique ribbon feeding device which includes a gearing arrangement operated incidentally to the character spacing movement of the typewriter carriage and rendered inoperative while the carriage is being returned to start a new line of printing. Further, the feeding arrangement is reversed automatically when substantially all the ribbon has been unwound from one spool to cause the ribbon to be wound on the empty spool. The mechanism is simple of construction and may be built as a unit which can then be attached to the movable carriage of any printer in such a manner that the ribbon spools are easily reached for adjustment or replacement.

While I have illustrated and described a preferred embodiment of my invention, it is to be understood that the device is capable of modification and I do not wish to be limited to the precise details set forth but desire to avail myself of the scope of the invention as set forth in the following claims.

What is claimed and desired to be secured by United States Letters Patent is:

1. In a typewriter having a movable carriage, a ribbon feeding device mounted on said movable carriage comprising a pair of rotatably mounted spools having an ink ribbon wound thereon, slidable movement receiving means connected to said spools, means for imparting movement to said spools including a rotatable driving member mounted in axially fixed relation upon said carriage and engageable with the movement receiving means of either of said spools, and a gear and clutch controlled by the movement of said carriage in a character spacing direction for operating said driving member to feed said ribbon from one of said spools to the other.

2. In a typewriter; a movable carriage; an inking ribbon; spools for said ribbon horizontally mounted on said carriage; and means for imparting movement to said spools to reversibly feed said ribbon including a spiral rack on said typewriter, an axially fixed drive shaft on said carriage to actuate either of said spools, and a spiral gear coacting with said rack and said shaft to actuate said shaft as said carriage is moved.



3. In a typewriter; a carriage intermittently movable in one direction and continuously movable in the other direction; an ink ribbon feeding and reversing device mounted on said carriage including a pair of rotatable spools having an ink ribbon wound thereon; and means for imparting movement to said spools to feed said ribbon, including a spiral rack on said typewriter, a drive shaft on said carriage to alternately drive said spools, a spiral gear in mesh with said rack, and a positive clutch effective upon the intermittent operation of said carriage to connect said gear to said drive shaft.

4. In a telegraph printer having rack means secured thereto, a movable carriage, a ribbon feeding and reversing mechanism mounted on said carriage, an axially fixed drive shaft secured to said mechanism, means on said drive shaft and coacting with said rack means to rotate said drive shaft as said carriage moves in a character spacing direction, a pair of rotatable members mounted on said mechanism, an ink ribbon mounted on said members and adapted to be reversibly fed therebetween, and slidable means on each of said members to alternately engage them with said drive shaft to reversibly feed said ribbon, said alternation taking place each time the last layer of said ribbon is unwound from either of said members.

5. In a telegraph printer having a rack secured thereto; a movable type carriage, a ribbon feeding and reversing mechanism mounted on said carriage, a drive shaft secured to said mechanism, a pair of camming means mounted on said drive shaft, gear and clutch means mounted on said drive shaft and engageable with said rack to drive said shaft as said carriage moves in a character spacing direction, a pair of rotatable spindles mounted in said mechanism, axially slidable means on said spindles and rotatable therewith engageable alternately with said drive shaft, a pair of spools removably mounted on said spindles and rotatable therewith, an ink ribbon mounted on said spools adapted to be reversibly fed therebetween, means coacting with one of said spools and one of said camming means to axially shift the slidable means on the spindle associated with said spool into engagement with said drive shaft and disengage the slidable means on the spindle associated with the other spool from said drive shaft whereby said ribbon is wound upon the operably engaged spool and payed out from the disengaged spool, and means coacting with said disengaged spool and said other camming means when the last layer of ribbon is payed out from said disengaged spool to alternate the engagement of said slidable means with said drive shaft whereby said ribbon feed is reversed.

6. A telegraph printer as defined in claim 5, wherein each of said means coacting with said spools and said camming means comprises a shiftable lever associated with one of said spools, spring means to shift said lever as the last layer of said ribbon is unwound from said spool, a cam follower operably connected with said lever to engage with one of said camming means when said lever is shifted, and a further means operably connected with said cam follower and each of said slidable means to engage one of said slidable means with said drive shaft and disengage said other slidable means from said drive shaft when said cam follower engages said camming means.

7. A telegraph printer as defined in claim 6, wherein each of said spools includes a core having an aperture therein, said ribbon being normally wound around said core to close said aperture; and said shiftable lever is associated with said aperture and ribbon, being confined within said aperture and held against shifting when said ribbon is wound around said core and released through said aperture to shifted position when the last layer of said ribbon is unwound from said core.

8. A telegraph printer as defined in claim 6, wherein said further means comprises a rockable beam pivoted at

its center on said mechanism, each end of said beam operably engaging one of said slidable means.

9. In a typewriter; a movable carriage; and an ink ribbon feeding and reversing device mounted on said carriage comprising a pair of vertical spindles, an ink ribbon mounted on said spindles and adapted to be reversibly fed therebetween, a drive shaft, an axially slidable member on each of said spindles to alternately engage them with said drive shaft to reversibly feed said ribbon, and means operable to drive said drive shaft as an incident to the movement of said carriage in a character spacing direction.

10. A device as defined in claim 9, wherein means are provided to alternate the engagement of said slidable members with said drive shaft each time the last layer of said ribbon is unwound from either of said spindles.

11. A device as defined in claim 9, wherein said drive shaft driving means includes a positive clutch, said clutch being disengaged during carriage return movement.

12. In a typewriter, a movable carriage, an axially fixed rotatable drive member mounted for rotation upon said carriage about an axis extending in the direction of movement of said carriage, a ribbon feeding mechanism supported on said carriage and operatively connectable to said drive member, a ribbon reversing mechanism supported on said carriage and operatively connectable to said drive member, and means, including a member fixed relative to the path of movement of said carriage and a gear mounted coaxial with said rotatable drive member and directly engaging said member fixed relative to the path of movement of said carriage, operative as an incident of movement of said carriage in a character spacing direction for imparting uni-directional rotation to said drive member to effect actuation of said mechanisms when operatively connected thereto.

13. A ribbon feeding device as defined in claim 1, further provided with automatic means coacting with said slidable means and said spools and adapted to be actuated by said rotatable driving member upon unwinding of the last layer of ribbon from a spool to engage said slidable movement receiving means with the rotatable driving member.

14. An ink ribbon feeding device for use on a typewriter having a movable carriage, comprising: a frame adapted to be mounted on said movable carriage; a pair of spools rotatably mounted in said frame; slidable movement receiving means connected to said spools; means for imparting movement to said spools including a rotatable driving member mounted in axially fixed relation upon said frame and engageable with the movement receiving means of either of said spools, and a gear and clutch for operating said driving member as an incident to the movement of said carriage in a character spacing direction to thereby impart movement to the movement receiving means of either of said spools.



15. An ink ribbon feeding and reversing device for use on a typewriter having a movable carriage, comprising a frame adapted to be mounted on said movable carriage, a pair of spindles journalled in said frame, an ink ribbon mounted on said spindles and adapted to be reversibly fed therebetween, a rotatable drive shaft journalled in and axially fixed relative to said frame, an axially slidable member on each of said spindles to alternatively engage them with said drive shaft to reversibly feed said ribbon, and means operable to drive said drive shaft as an incident to the movement of said carriage in a character spacing direction including an element adapted to be fixed to a non-movable part of the typewriter.

16. A device as set forth in claim 15, wherein said element adapted to be fixed to a non-movable part of the typewriter is a gear rack, and said means further includes a uni-directional gear drive connected with said drive shaft and adapted to be engaged with said gear rack when both the frame and gear rack are mounted on a typewriter, to drive said shaft only when the carriage moves in a character spacing direction.

17. In a typewriter, a movable carriage, an axially fixed drive member mounted for rotation upon said carriage about an axis extending in the direction of movement of said carriage, a reversible ribbon feeding mechanism supported on said carriage and operatively connectable to said drive member, a ribbon reversing mechanism non-rotatably supported on said carriage relative to rotation of said drive member, operatively connected to said ribbon feed mechanism and including means movable into engagement with said axially fixed drive member to thereby render said reversing mechanism operable to reverse the connection of said ribbon feeding mechanism to said drive member, and means operative as an incident of movement of said carriage in a character spacing direction for imparting uni-directional rotation to said drive member to effect operation of said mechanisms when operatively connected and engaged therewith.


**References Cited** in the file of this patent

UNITED STATES PATENTS

| | | |
|---|---|---|
| 747,917 | Hillard | Dec. 22, 1903 |
| 1,096,010 | Barr | May 12, 1914 |
| 1,286,573 | Foothorap | Dec. 3, 1918 |
| 2,069,277 | Sacerdote | Feb. 2, 1937 |
| 2,257,553 | Hept | Sept. 30, 1941 |
| 2,531,872 | Crumrine | Nov. 28, 1950 |