Nov. 6, 1951 E. G. BERG 2,574,317

ELECTRICAL SHAVING DEVICE

Filed Feb. 6, 1950

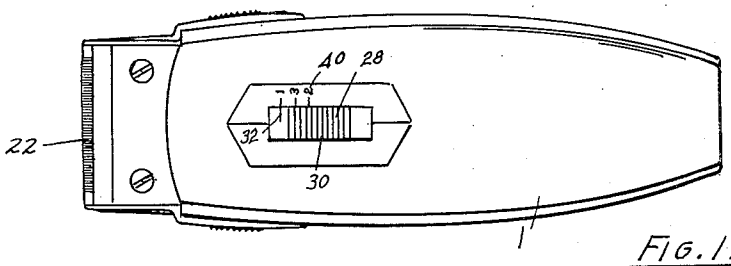

FIG. 1.

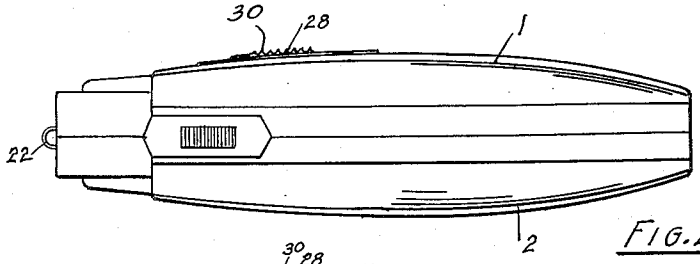

FIG. 2.

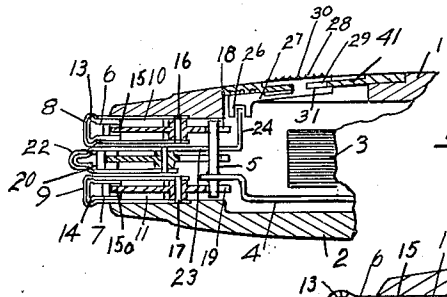

FIG. 3.

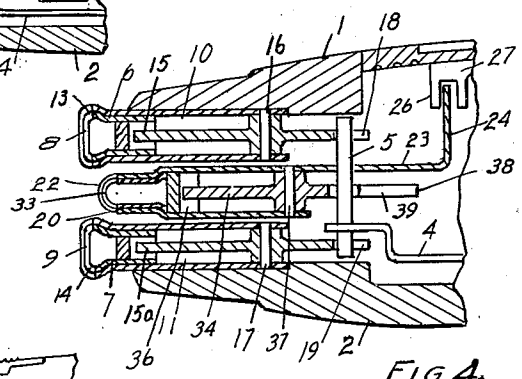

FIG. 4.

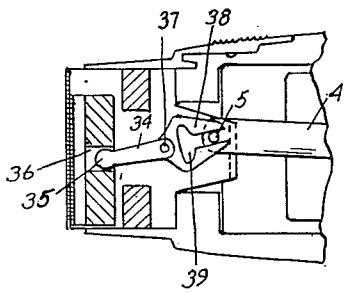

FIG. 5.

Inventor

Emil G. Berg

By

Florian G. Miller

Attorney

Patented Nov. 6, 1951 2,574,317

UNITED STATES PATENT OFFICE

2,574,317

ELECTRICAL SHAVING DEVICE

Emil G. Berg, Erie, Pa., assignor to Jet Electric Shaver Corporation, New York, N. Y., a corporation of New York

Application February 6, 1950, Serial No. 142,610

10 Claims. (Cl. 30—43)

1

This invention relates generally to shaving devices and more particularly to electrically operated shaving devices of the type which are commonly known as dry shavers.

Dry shavers now on the market must necessarily have comparatively small width slots in the cutter head thereof to prevent the skin of the face passing therethrough into the path of the teeth of the cutter. These shaving devices must be designed for the person with the tenderest skin. A person with a heavy beard does not get a good shave from the shavers now on the markets. It is practically impossible to cut long hairs with present shaving devices because they do not enter the slots in the cutter head as the short hair will. Present dry shavers cannot, therefore, be used for trimming a mustache or trimming the hair on the side of the head or on the neck.

It is, accordingly, an object of my invention to overcome the above and other defects in electrical shaving devices and it is more particularly an object of my invention to provide an electrical shaving device which is simple in construction, economical in cost, easy to operate, easy to adjust, and one which has a long life and is efficient in operation.

Another object of my invention is to provide a multiple head electric shaver with one head thereof being longitudinally adjustable relative to the other heads.

Another object of my invention is to provide two outer cutting heads for normal shaving and a vertically adjustable intermediate head with comparatively wide slots for cutting long hair.

Other objects of my invention will become evident from the following detailed description, taken in conjunction with the accompanying drawings, in which

Fig. 1 is a plan view of my novel electrical shaving device;

Fig. 2 is a side elevational view of my novel electrical shaving device;

Fig. 3 is a fragmentary vertical sectional view of the forward end of my novel electrical shaving device with the cutting face of the center head extending outwardly from the side heads for cutting long hairs;

Fig. 4 is a vertical sectional view similar to the view in Fig. 3 with the center cutting head in a retracted position; and

Fig. 5 is a horizontal sectional view of the forward cutting end of my novel electric shaver.

Referring now to the drawings, I show in Figs. 1 to 5 inclusive an electric dry shaver having a handle formed by mating halves 1 and 2. A motor 3 is disposed between the mating halves 1 and 2 and it actuates an outwardly extending, oscillatable arm 4. The arm 4 has a transversely extending shaft 5 on the outer extremity thereof. U-shaped cutter heads 6 and 7 with transversely

2

slotted cutting faces 8 and 9 are seated in recesses 10 and 11 in the nose portion of the mating halves 1 and 2 of my novel shaver. Cutters 13 and 14 are disposed in the upper end of the guard members 6 and 7 and they are engaged by the upper ends 15 and 15a of pivoted operating levers 16 and 17, the lower ends 18 and 19 of the operating levers 16 and 17 having longitudinally extending slotted portions for engaging the oscillatable shaft 5. The cutter heads 6 and 7, the cutters 13 and 14, and the means for operating these cutters 13 and 14 are well known in the art.

Now coming to the gist of my invention, I show a generally U-shaped cutter head 20 disposed between the cutter heads 6 and 7 and being vertically adjustable relative thereto. The cutter head 20 has a rounded face portion 22 with comparatively wide, transverse slots, as shown in the drawing, although it will be evident that other shapes of cutting face 22 may be used with comparatively wide transverse slots without departing from my invention. One leg of the U-shaped cutter head 20 has an extension 23 with a right angled end 24 disposed between spaced parallel projections 26 on an extension 27 of a button 28 extending through an aperture 29 in the upper mating half 1 of my novel electrical shaving device. The button 28 has a raised, transversely grooved portion 30 for engagement by a human finger to move it longitudinally. The button 28 also has a line 32 for alignment with graduations 40 on the mating half 1. Upon longitudinal movement of the button 28, the adjustable head 20 is moved therewith. The button 28 has slots 31 on opposite ends thereof in telescopic relation with the sides 41 of aperture 29 in the upper mating half 1 of my shaver. A cutter 33 in the vertically adjustable cutter head 20 is moved to and fro by an oscillatable lever 34 having the head 35 thereof disposed in an aperture 36 in the body of the cutter 33. The operating lever 34 is pivoted on a pin 37 journalled in recesses in the side of the cutter head 20. The lower end 38 of the lever 34 has a longitudinally extending T-slot 39 through which extends the transverse shaft 5 carried by the oscillatable arm 4. The upper end of the T-slot 39 is enlarged so that when the cutter head 20 is moved to a retracted position below the face of the side cutter heads 6 and 7 as shown in Fig. 4, the driving shaft 5 will move in the transverse portion of the T-slot 39 without causing any motion of the actuating lever 34. When the cutter head 20 is in an outward position for cutting long hairs as shown in Figs. 3 and 5, the driving shaft 5 will be in the lower portion of the T-slot 39 and it will cause the cutter 33 to move to and fro.

In the operation of my novel shaving device, when it is desired to cut long hairs such as the long hairs on the neck of a person, it is merely

necessary to push the button 28 forwardly with indicating line 32 in alignment with the first graduated line numbered 1 wherein the face 22 of the cutter head 20 will extend outwardly from the side cutter heads 6 and 7 as shown in Fig. 3. The projections 26 on the extension 27 of the button 28 engage the end 24 when the button 28 is moved, to move the head 20. The cutter 33 therein will be moved by the operation of the driving shaft 5 on the arm 4 which will also operate the cutters 13 and 14 in the side cutter heads 6 and 7. The cutters 13 and 14 operate at all times upon operation of the motor 3 and the oscillation of the arm 4. In the use of my novel shaver on a smooth surface of the face, the cutter head 20 is retracted as shown in Fig. 4 with the indicating line 32 in alignment with the indicating line numbered 2 on the mating half 1 wherein the cutters 13 and 14 in the cutter heads 6 and 7 operate for the cutting of hairs whereas the cutter 33 in the cutter head 20 does not operate because of the movement of the driving shaft 5 in the transverse portion of the T-slot 39 in the lever 34.

It will be evident from the foregoing description that I have provided a novel electric dry shaver which has an adjustable center head movable relative to and outwardly from side heads, the side heads having comparatively wide transverse slots for cutting long hairs on the neck and head and for trimming mustaches and the like, and which has a novel and simple arrangement for providing adjustment for the cutter head.

It will further be evident that the cutting face 22 of the head 20 may be disposed in substantially the same plane as the faces 8 and 9 of the cutter heads 6 and 7 to provide an additional cutter head for normal shaving. With the cutter head 20 in this position, the button 28 will have the indicating line 32 thereon in alignment with the indicating line 3 of the mating half 1.

Various changes may be made in the specific embodiment of my invention without departing from the spirit thereof or from the scope of the appended claims.

What I claim is:

1. An electric shaver comprising a body, spaced, parallel heads on said body having transverse slots, cutters in said heads, a center cutter head having comparatively wide transverse slots disposed between said side heads, a cutter in said center head, means for moving said center head and cutter relative to said side cutter heads, and means for oscillating the cutters in all of said heads.

2. An electric shaver as set forth in claim 1 wherein said cutter in said center head has a projecting member engageable with said means for oscillating the cutters in all of said heads for operation of said cutter only when said center cutter extends outwardly from the spaced parallel heads on the opposite sides of said shaver.

3. An electric shaver as set forth in claim 1 wherein a bracket is attached to said center head and a longitudinally slidable, manually operated button extends outwardly from said body in engagement with said bracket to move said center cutter head longitudinally.

4. An electric shaver comprising a body, spaced, parallel side heads on said body having transverse slots in the face thereof, cutters in said heads, pivoted driving levers engaging said cutters, a center head between said side heads having comparatively wide transverse slots, a cutter in said center head, a pivoted driving lever engaging said center cutter, means for oscillating said driving levers, and means for moving said center head longitudinally relative to said side heads.

5. An electric shaver as set forth in claim 4 wherein the center driving lever has a longitudinally extending T-slot in one end thereof engageable by a driving shaft so that said cutter in said center head will not oscillate when said center head is below said side heads.

6. An electric shaver comprising an elongated body having an aperture in one side thereof, a plurality of cutter heads disposed on one end of said body, one of said heads being adjustable relative to the others, cutters in said heads, lever arms connecting said cutter heads, a motor in said body, an oscillatable lever actuated by said motor and engaging said lever arms for oscillating said cutters, an extension on said adjustable cutter head, and a button member having a portion extending through the aperture in said body for engaging said extension for moving said adjustable cutter head longitudinally of said shaver.

7. An electric shaver as set forth in claim 6 wherein a portion of the lever arm engaging the cutter in said adjustable cutter head has a T-slot therein engageable by a cross shaft on the oscillatable lever of said motor whereby said lever arm and cutter associated with said adjustable cutter head will not be operated when said cross shaft is in the transverse portion of said T-slot.

8. An electric shaver comprising an elongated body having an aperture, cutter heads on one end of said body, one of said cutter heads being adjustable longitudinally relative to the other cutter heads, cutters in said cutter heads, means for oscillating said cutters, and means extending externally of said aperture in said body for moving said adjustable cutter head longitudinally.

9. An electric shaver as set forth in claim 8 wherein the means for moving said adjustable cutter head longitudinally comprises a right angled extension on said adjustable cutter head and a button extending externally of said body through said aperture with a bifurcated portion for engaging said right angled extension.

10. An electric shaver comprising an elongated body having an aperture, a motor in said body, an oscillatable lever arm actuated by said motor, a transverse shaft on said lever arm, generally U-shaped outer side cutter heads disposed in one end of said body, a generally U-shaped cutter head disposed between said outer cutter heads having comparatively wide transverse slots, cutters in said cutter heads, pivoted lever arms engaging said cutters and having the opposite ends thereof engaging the shaft on said oscillatable lever arm, a right angled extension on one leg of said cutter head, and a longitudinally movable button extending through said aperture in said body having a portion thereof for engagement with said right angled extension of said cutter in said adjustable cutter head to move said adjustable cutter head longitudinally relative to said side cutter heads.

EMIL G. BERG.

No references cited.