Jan. 9, 1945. W. W. SIBSON, JR., ET AL 2,366,811

PACKAGING MACHINE

Filed June 24, 1942 17 Sheets-Sheet 1

Fig. 1.

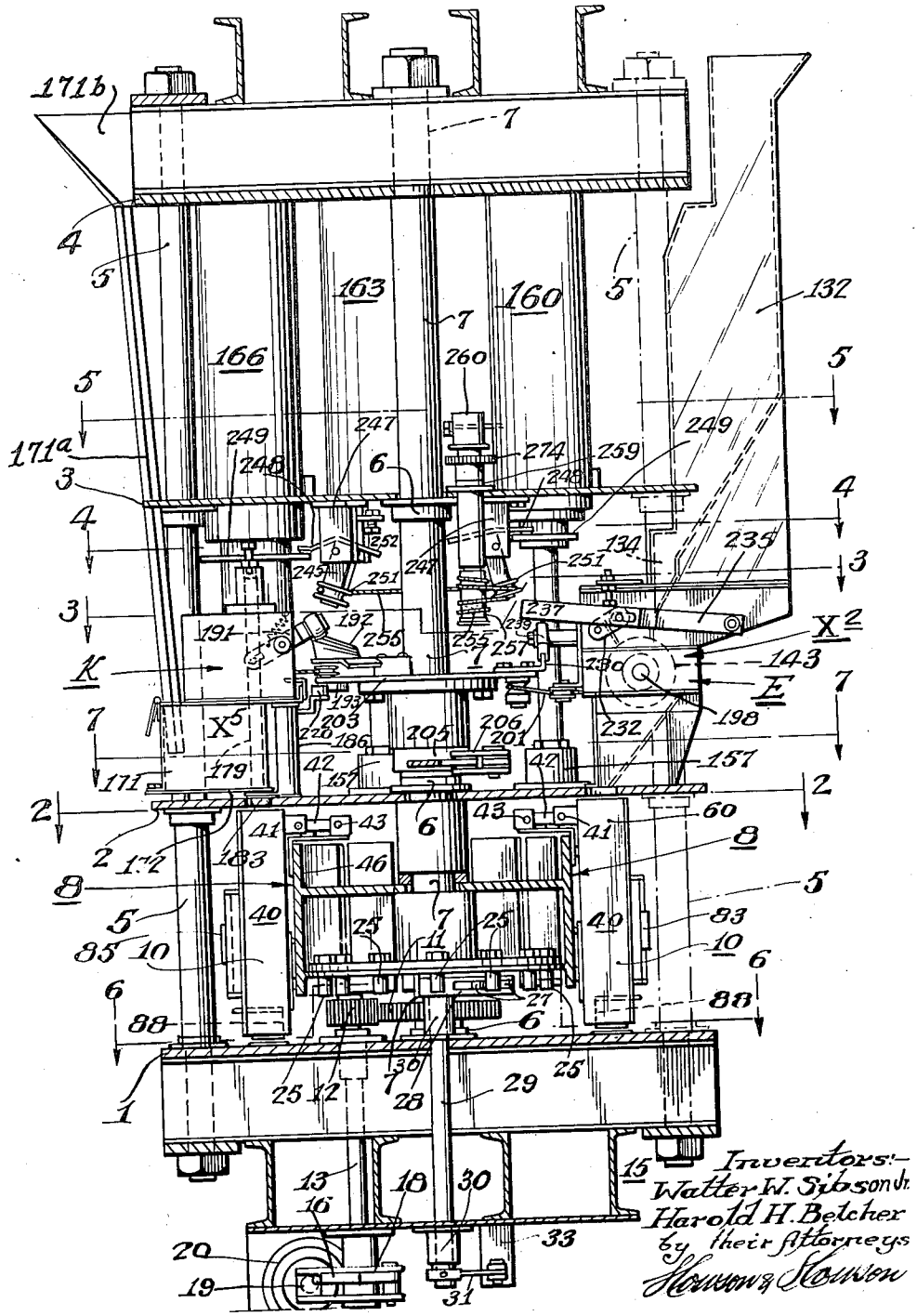

Inventors:-
Walter W. Sibson Jr.
Harold H. Belcher
by their Attorneys
Howson & Howson

Jan. 9, 1945. W. W. SIBSON, JR., ET AL 2,366,811

PACKAGING MACHINE

Filed June 24, 1942 17 Sheets-Sheet 2

Fig. 2.

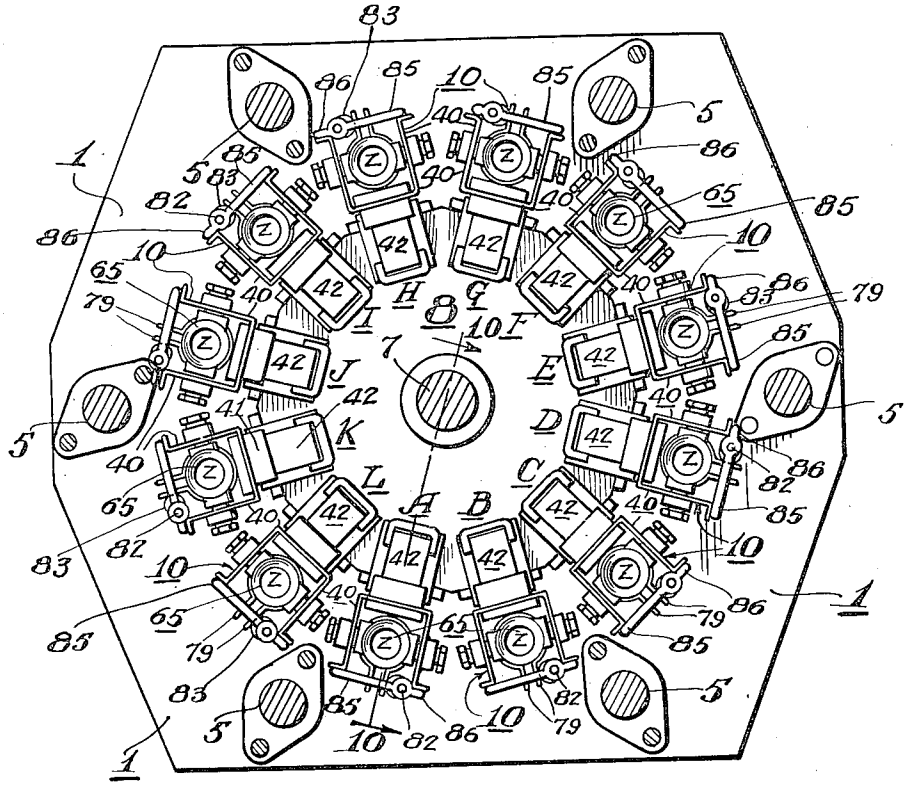

Inventors:-
Walter W. Sibson Jr.
Harold H. Belcher
by their Attorneys
Howson & Howson

Jan. 9, 1945. W. W. SIBSON, JR., ET AL 2,366,811

PACKAGING MACHINE

Filed June 24, 1942 17 Sheets-Sheet 3

Fig. 3.

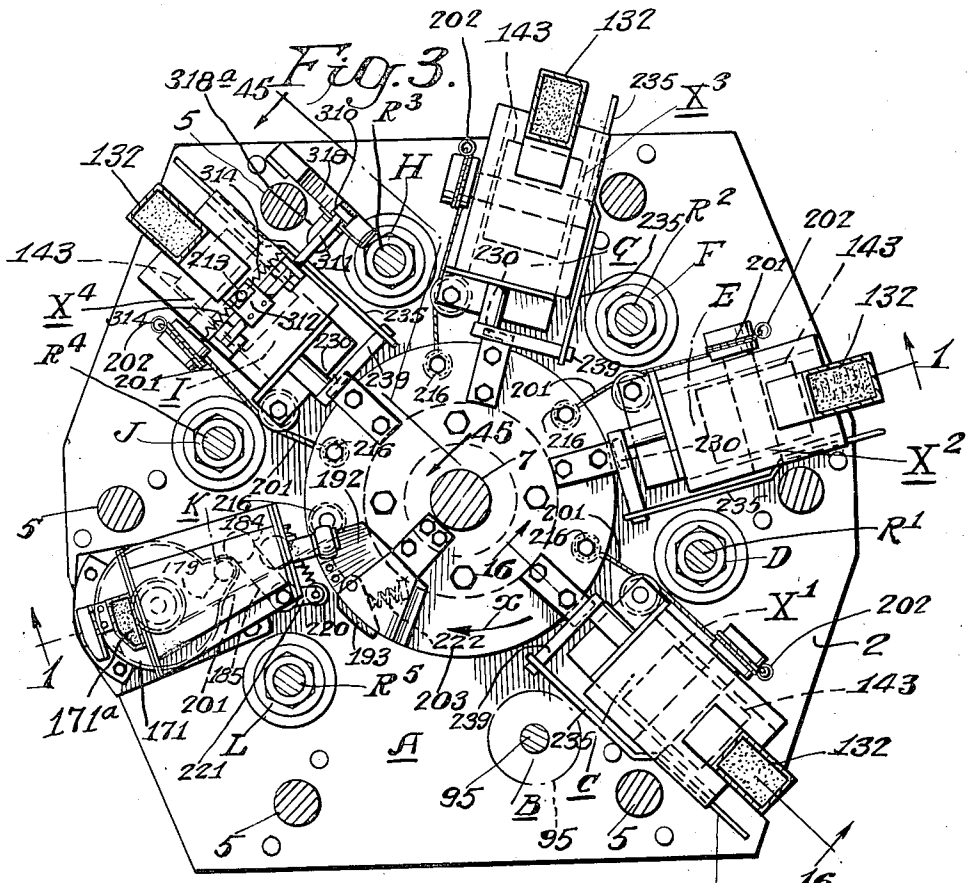

Fig. 29.

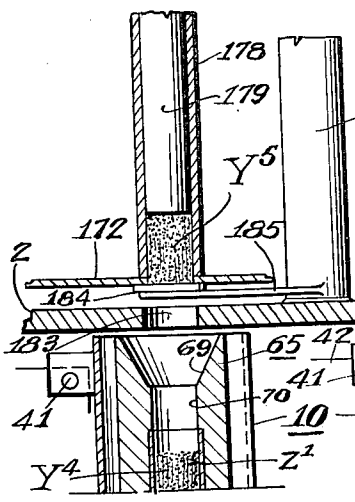

Fig. 30.

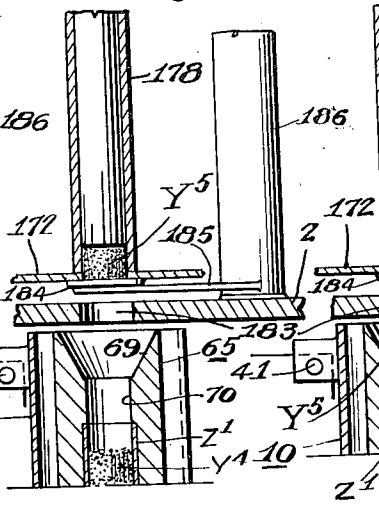

Fig. 31.

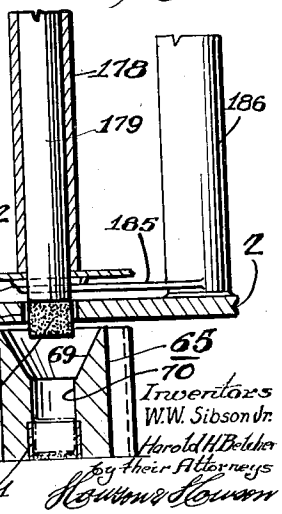

Inventors
W. W. Sibson Jr.
Harold H. Belcher
by their Attorneys
Holman & Stevens

Jan. 9, 1945. W. W. SIBSON, JR., ET AL 2,366,811

PACKAGING MACHINE

Filed June 24, 1942 17 Sheets-Sheet 4

Fig. 4.

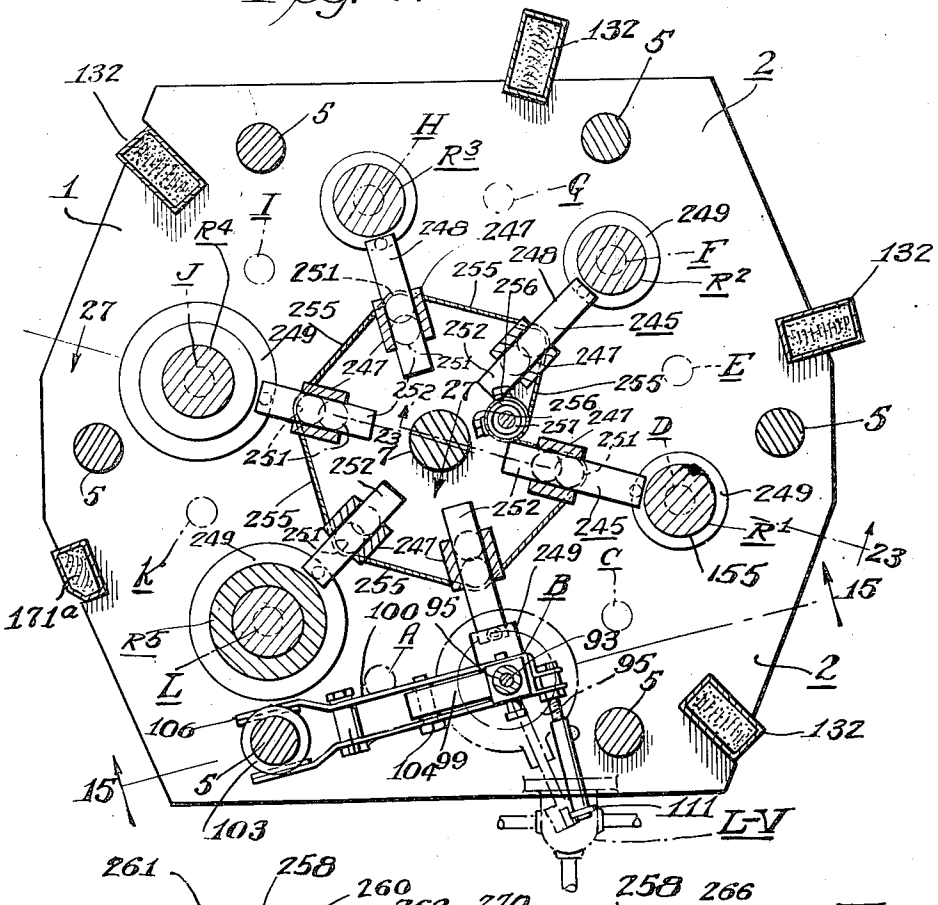

Fig. 42.

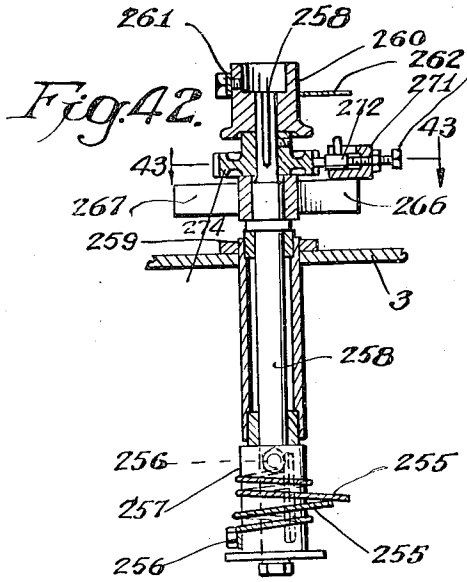

Fig. 43.

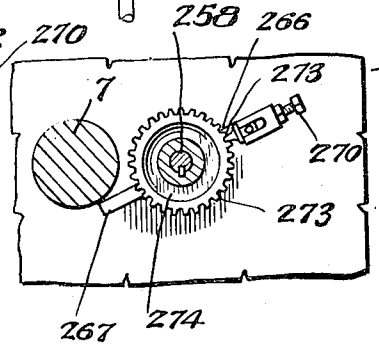

Inventors:—
Walter W. Sibson Jr.
Harold H. Belcher
by their Attorneys
Howson & Howson

Jan. 9, 1945. W. W. SIBSON, JR., ET AL 2,366,811

PACKAGING MACHINE

Filed June 24, 1942 17 Sheets-Sheet 5

Fig. 5.

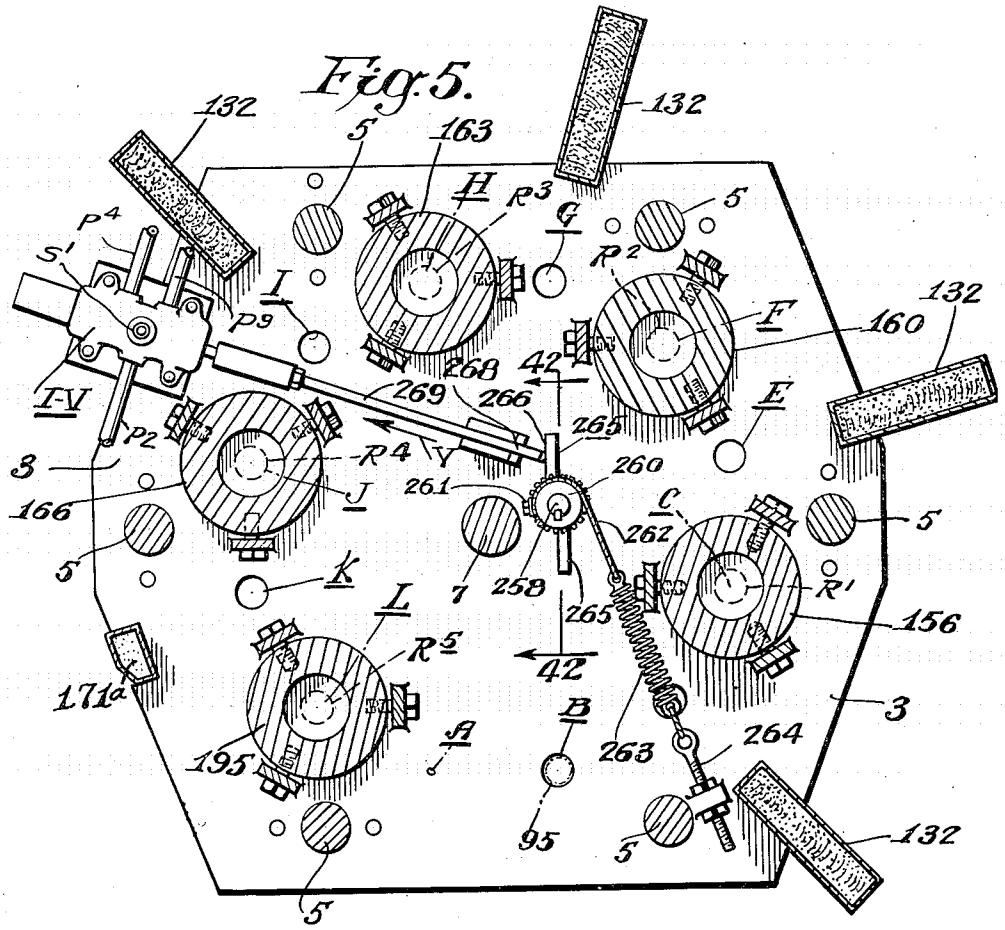

Inventors:—
Walter W. Sibson Jr.
Harold H. Belcher
by their Attorneys
Howson & Howson

Jan. 9, 1945. W. W. SIBSON, JR., ET AL 2,366,811

PACKAGING MACHINE

Filed June 24, 1942 17 Sheets-Sheet 6

Fig. 6.

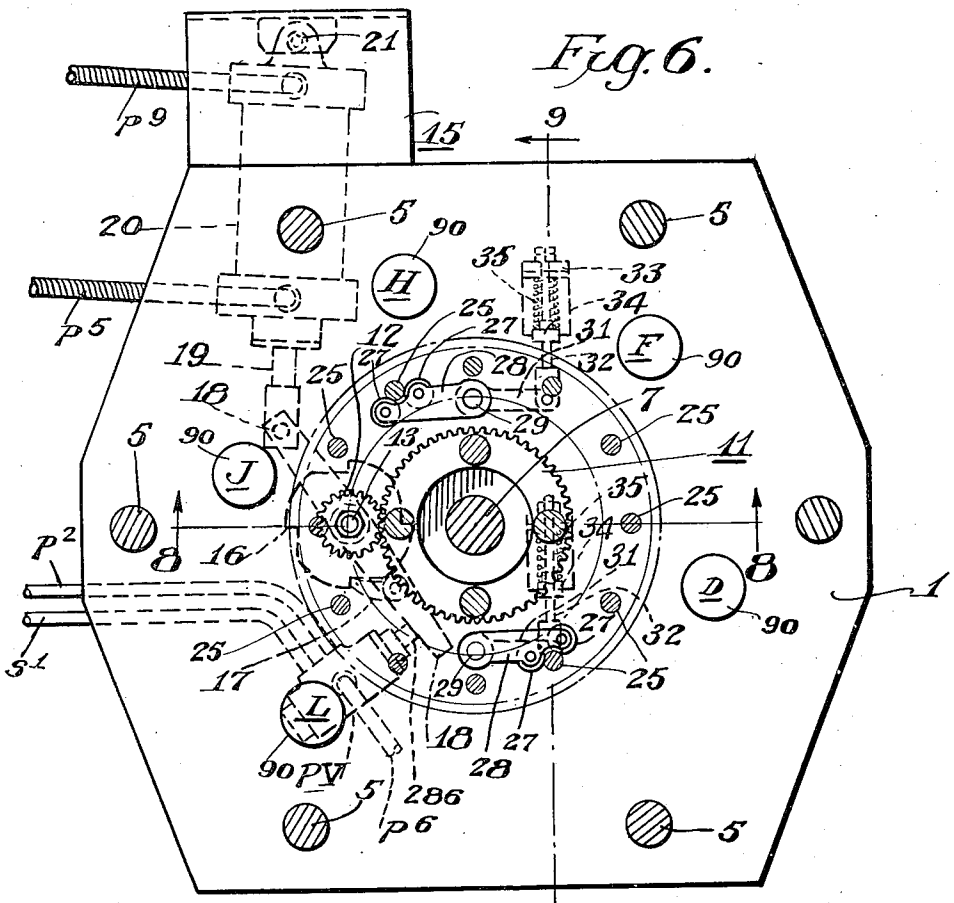

Fig. 8.

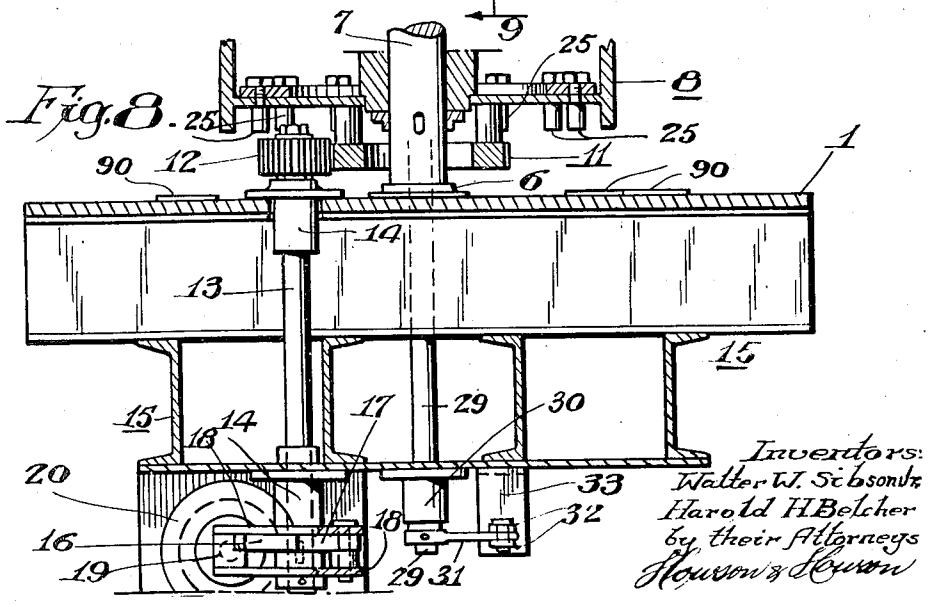

Inventors:
Walter W. Sibson Jr.
Harold H. Belcher
by their Attorneys
Howson & Howson

Jan. 9, 1945. W. W. SIBSON, JR., ET AL 2,366,811

PACKAGING MACHINE

Filed June 24, 1942 17 Sheets-Sheet 7

Fig. 7.

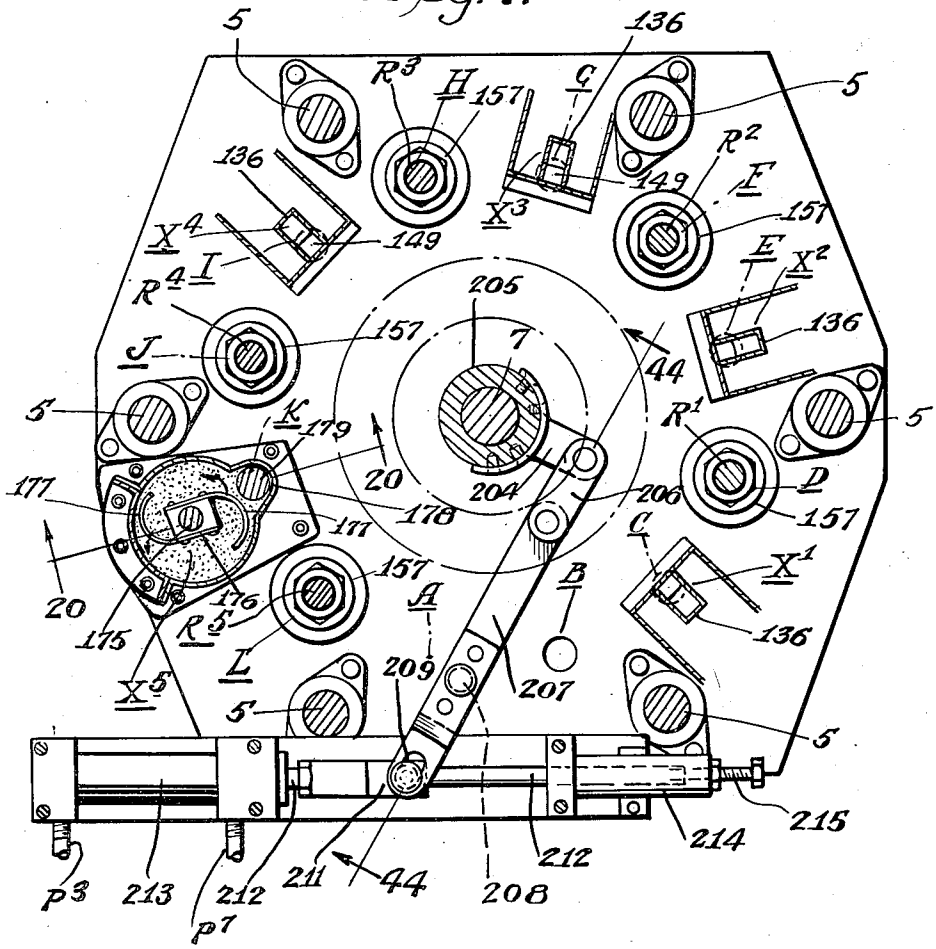

Fig. 44.

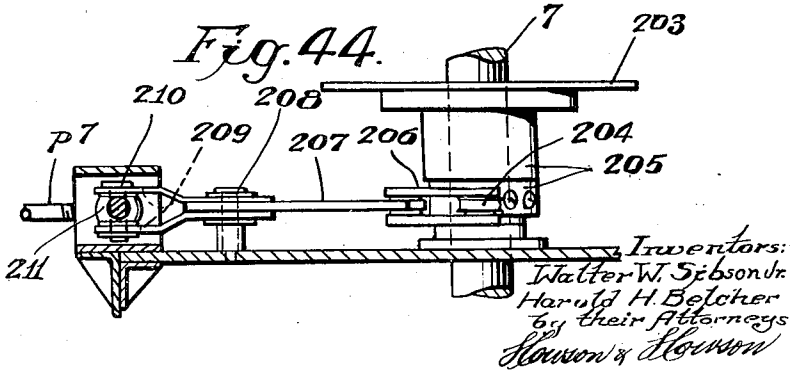

Inventors:
Walter W. Sibson Jr.
Harold H. Belcher
by their Attorneys
Howson & Howson

Jan. 9, 1945. W. W. SIBSON, JR., ET AL 2,366,811

PACKAGING MACHINE

Filed June 24, 1942 17 Sheets-Sheet 8

Fig. 9.

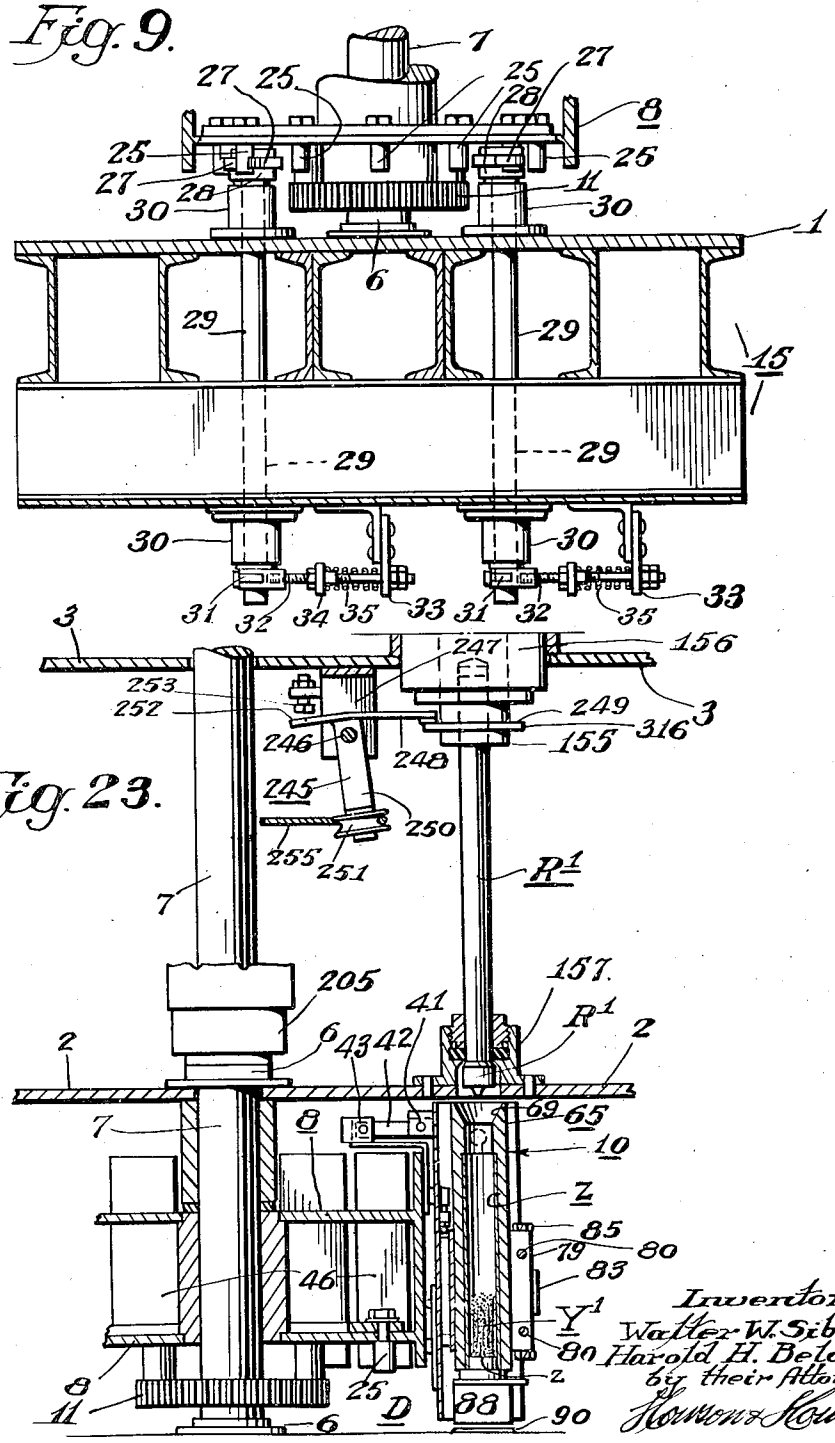

Fig. 23.

Inventors:—
Walter W. Sibson Jr.
Harold H. Belcher
by their Attorneys
Howson & Howson

Jan. 9, 1945. W. W. SIBSON, JR., ET AL 2,366,811

PACKAGING MACHINE

Filed June 24, 1942 17 Sheets-Sheet 9

Fig. 12.

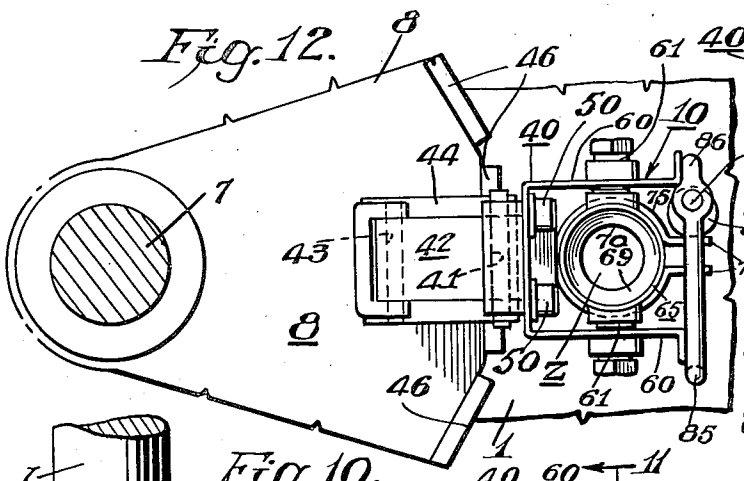

Fig. 14.

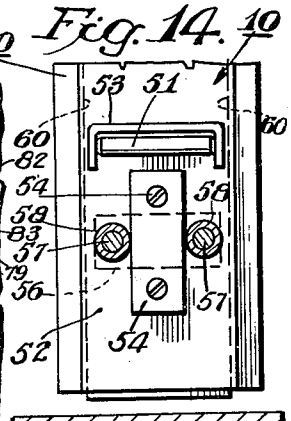

Fig. 10.

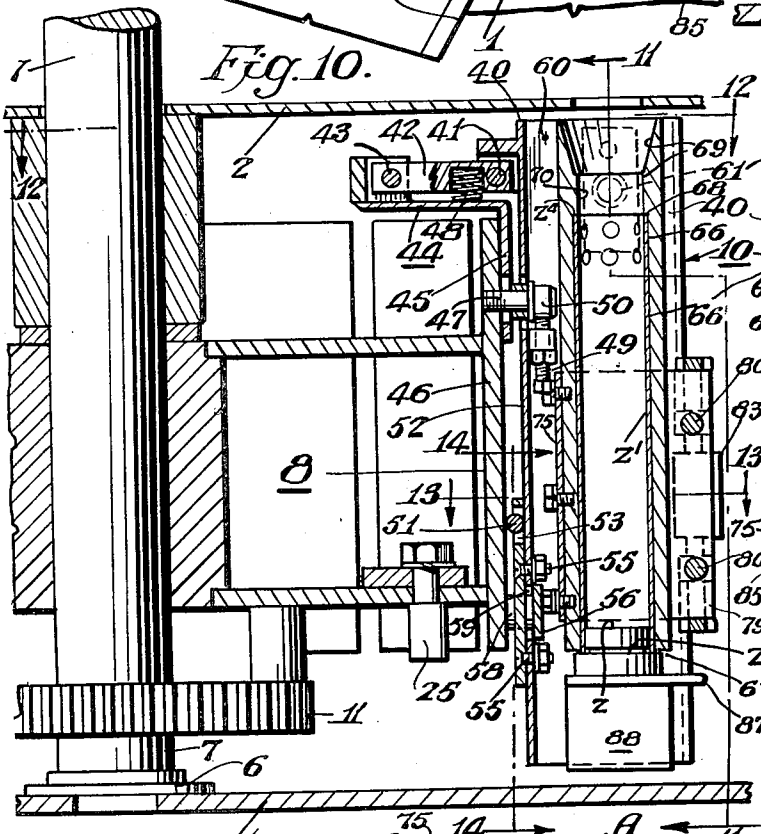

Fig. 11.

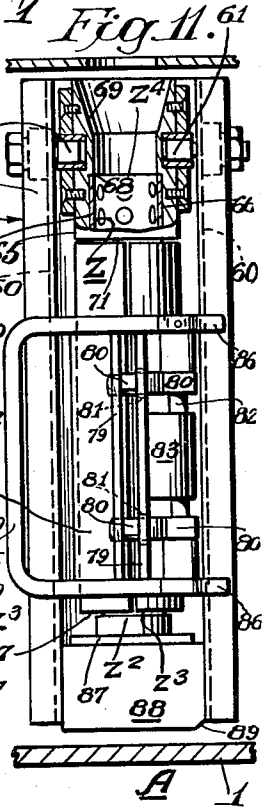

Fig. 13.

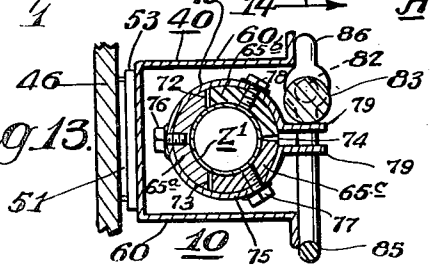

Inventors:-
Walter W. Sibson Jr.
Harold H. Belcher
by their Attorneys
Howson & Howson

Jan. 9, 1945. W. W. SIBSON, JR., ET AL 2,366,811

PACKAGING MACHINE

Filed June 24, 1942 17 Sheets-Sheet 10

Fig. 15.

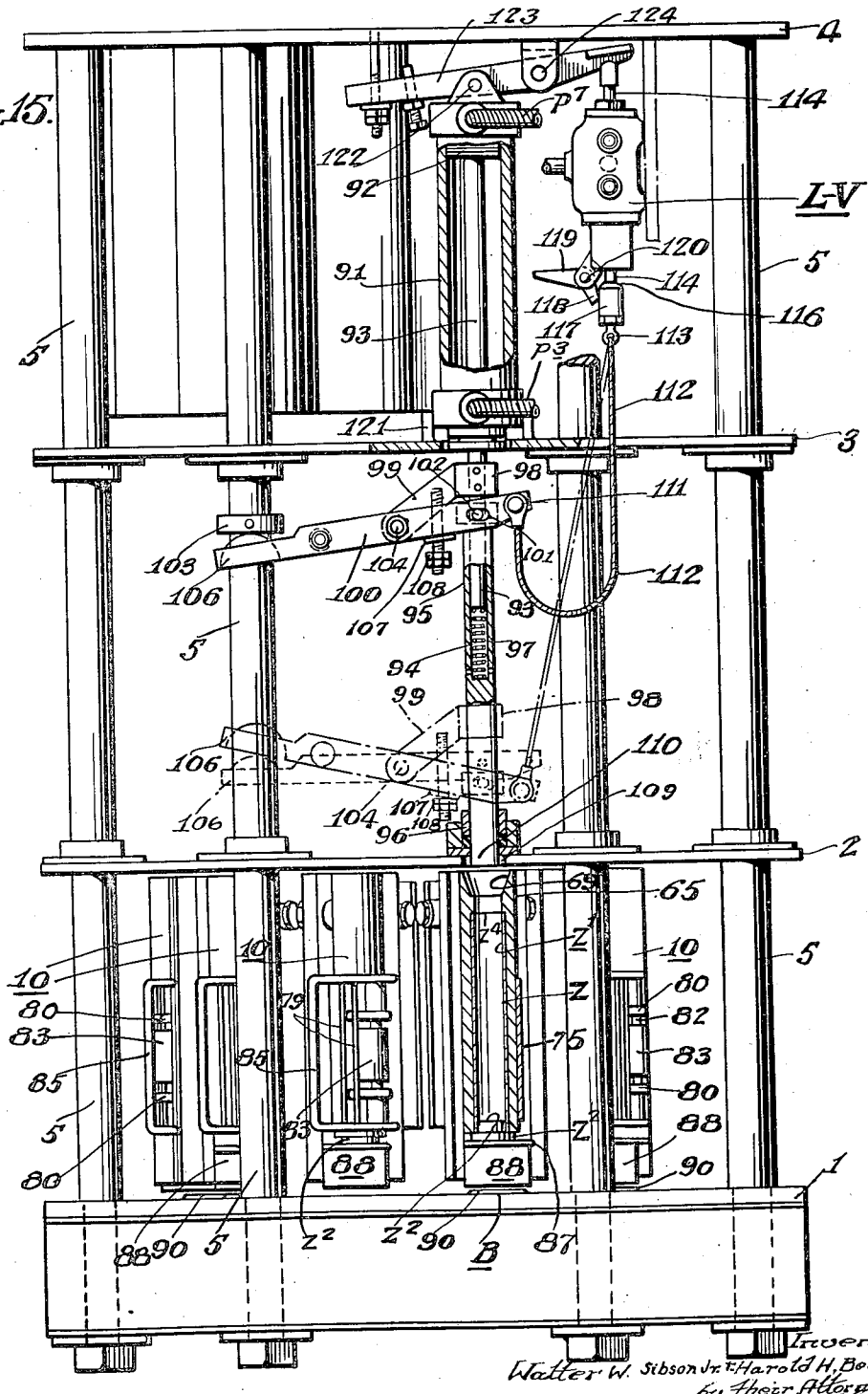

Inventors
Walter W. Sibson Jr. & Harold H. Belcher
by Their Attorneys
Howson & Howson

Jan. 9, 1945. W. W. SIBSON, JR., ET AL 2,366,811

PACKAGING MACHINE

Filed June 24, 1942 17 Sheets-Sheet 11

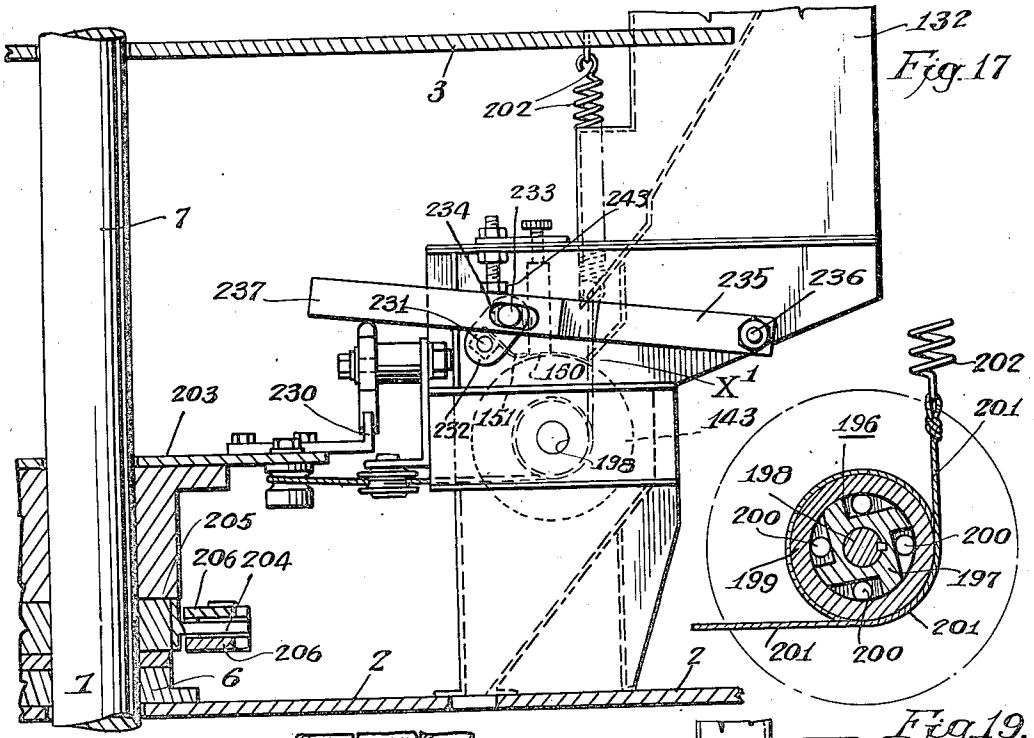

Fig. 17

Fig. 19.

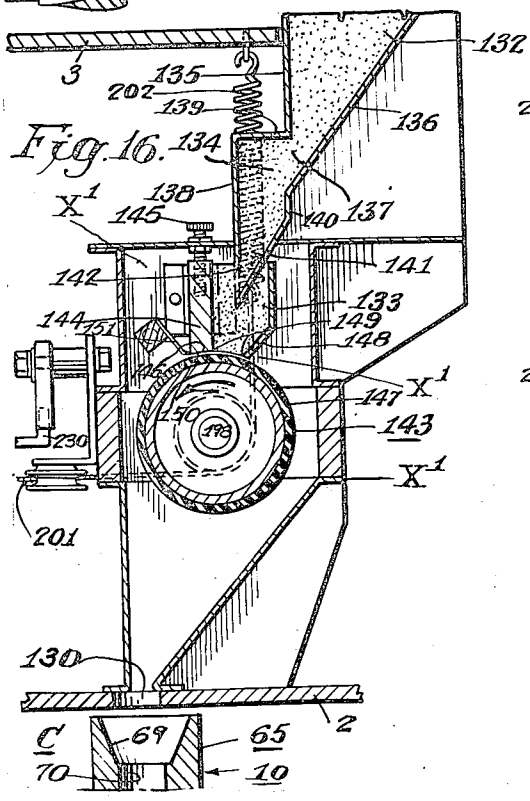

Fig. 16.

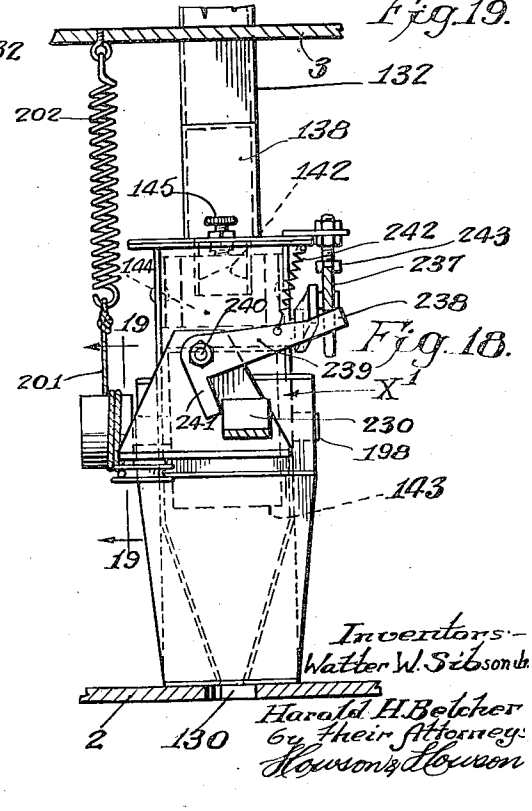

Fig. 18.

Inventors-
Walter W. Sibson Jr.
Harold H. Belcher
By their Attorneys
Howson & Howson

Jan. 9, 1945. W. W. SIBSON, JR., ET AL 2,366,811

PACKAGING MACHINE

Filed June 24, 1942 17 Sheets-Sheet 12

Fig. 21.

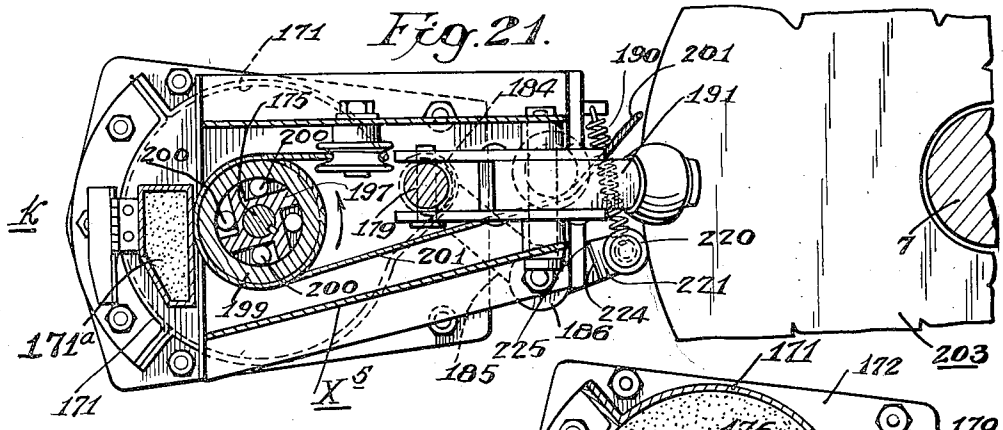

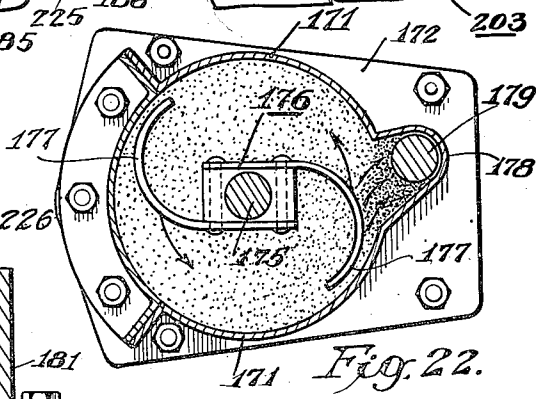

Fig. 22.

Fig. 20.

Inventors
Walter W. Sibson Jr.
Harold H. Belcher
By their Attorneys
Howson & Howson

Jan. 9, 1945. W. W. SIBSON, JR., ET AL 2,366,811

PACKAGING MACHINE

Filed June 24, 1942 17 Sheets-Sheet 13

Fig. 27.

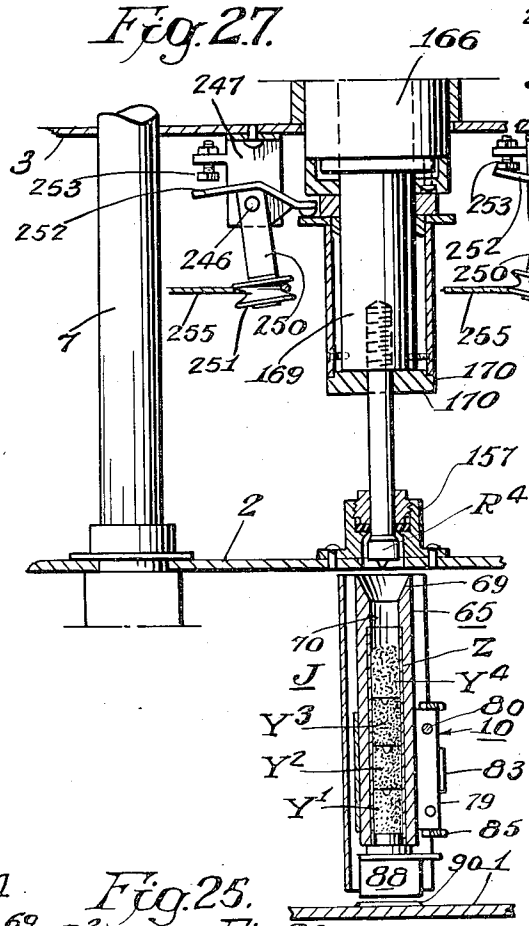

Fig. 28.

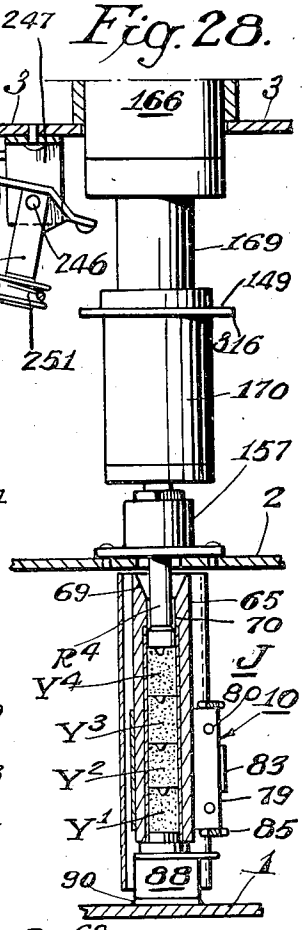

Fig. 24.

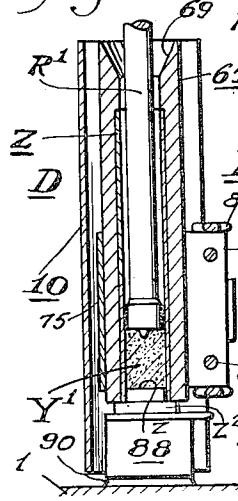

Fig. 25.

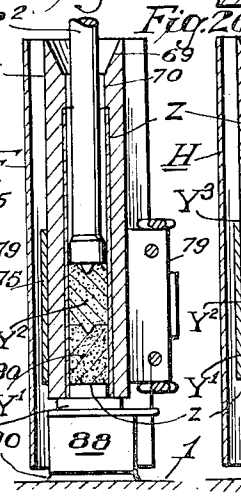

Fig. 26.

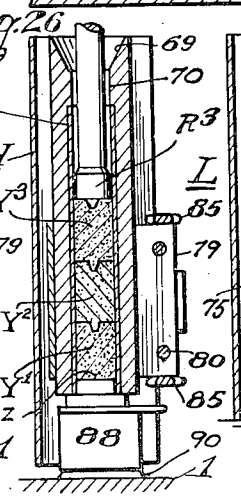

Fig. 32.

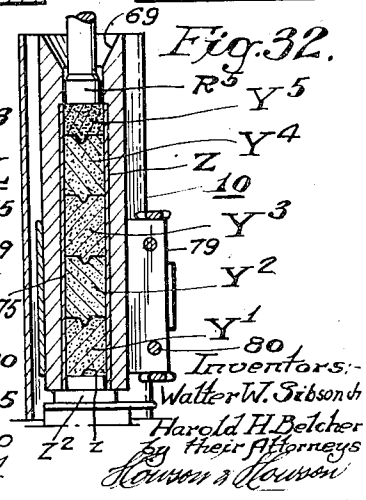

Inventors:-
Walter W. Sibson Jr.
Harold H. Belcher
By their Attorneys
Howson & Howson

Jan. 9, 1945. W. W. SIBSON, JR., ET AL 2,366,811

PACKAGING MACHINE

Filed June 24, 1942 17 Sheets-Sheet 14

Fig. 33.

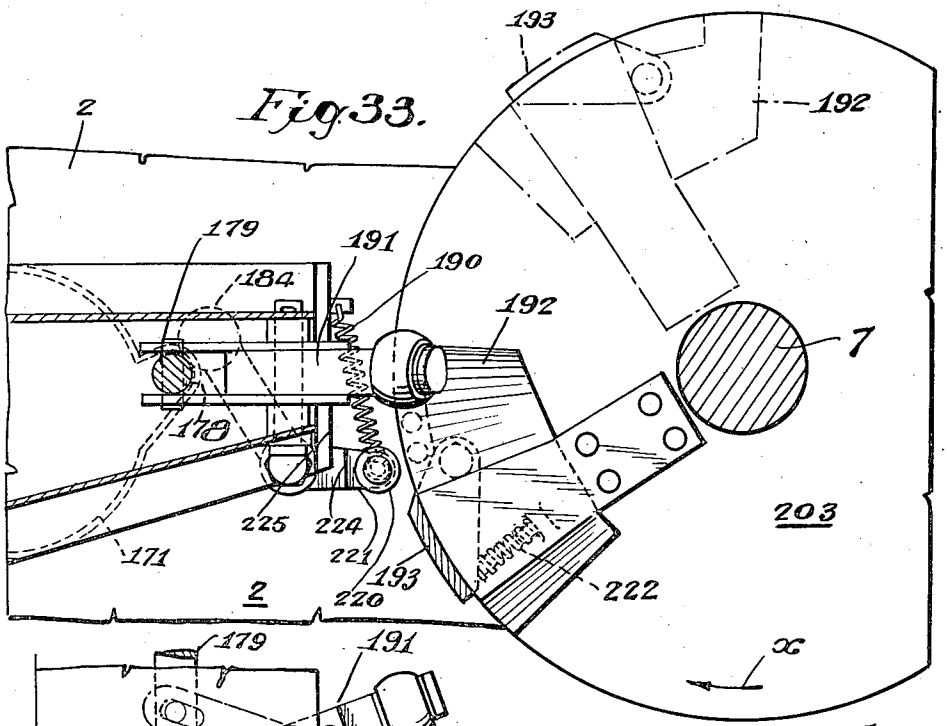

Fig. 34.

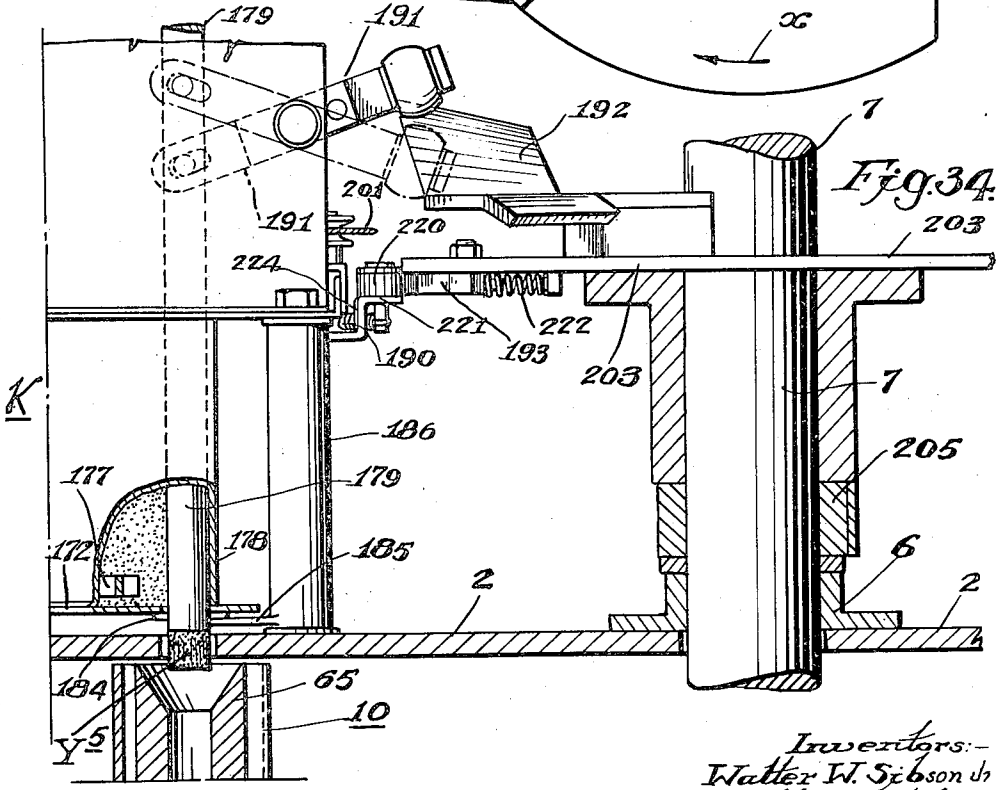

Inventors:-
Walter W. Sibson Jr.
Harold H. Belcher
by their Attorneys:
Hauson & Hauson

Jan. 9, 1945. W. W. SIBSON, JR., ET AL 2,366,811

PACKAGING MACHINE

Filed June 24, 1942 17 Sheets-Sheet 15

Fig. 35.

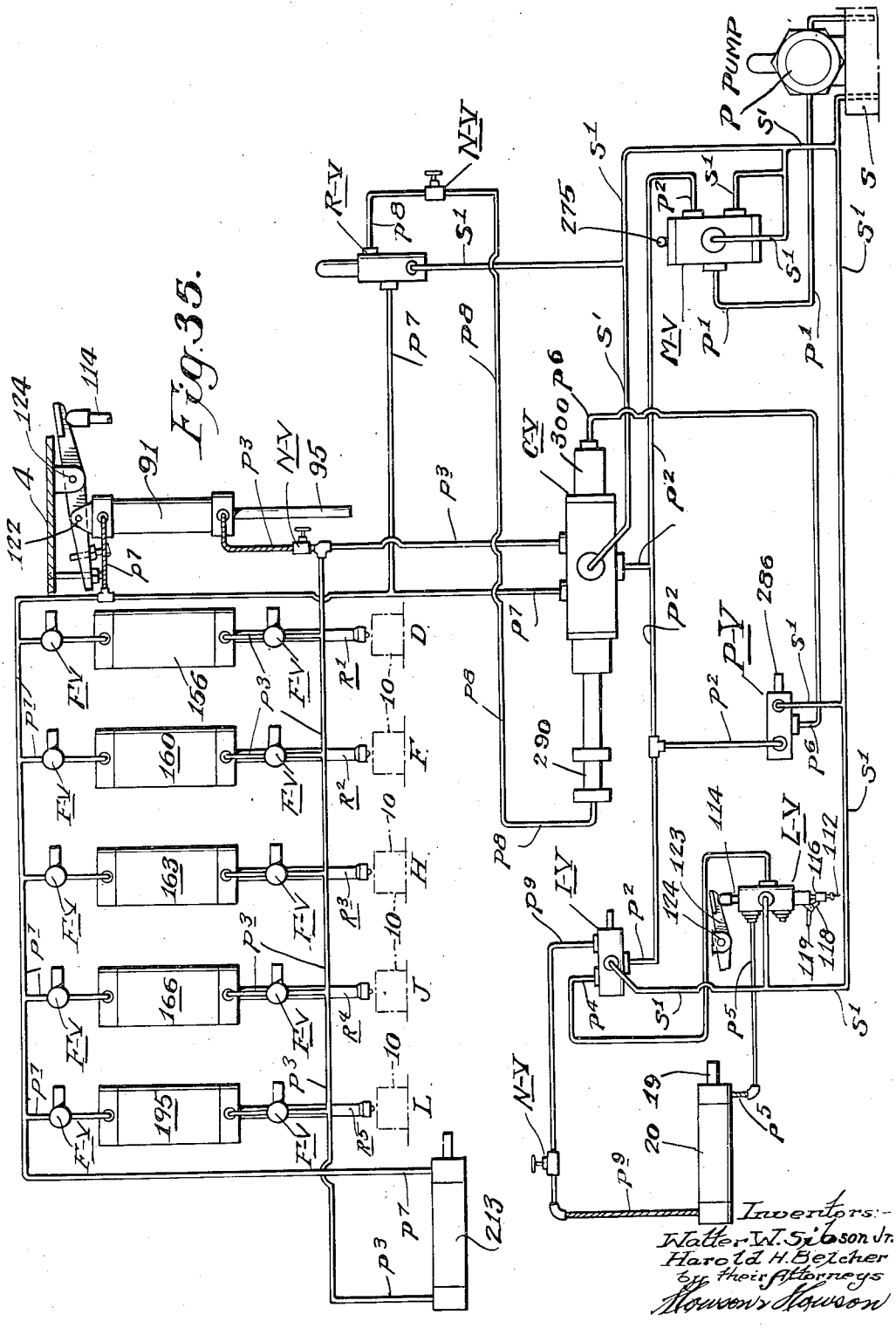

Inventors:-
Walter W. Sibson Jr.
Harold H. Belcher
by their Attorneys
Howson & Howson

Jan. 9, 1945. W. W. SIBSON, JR., ET AL 2,366,811

PACKAGING MACHINE

Filed June 24, 1942 17 Sheets-Sheet 16

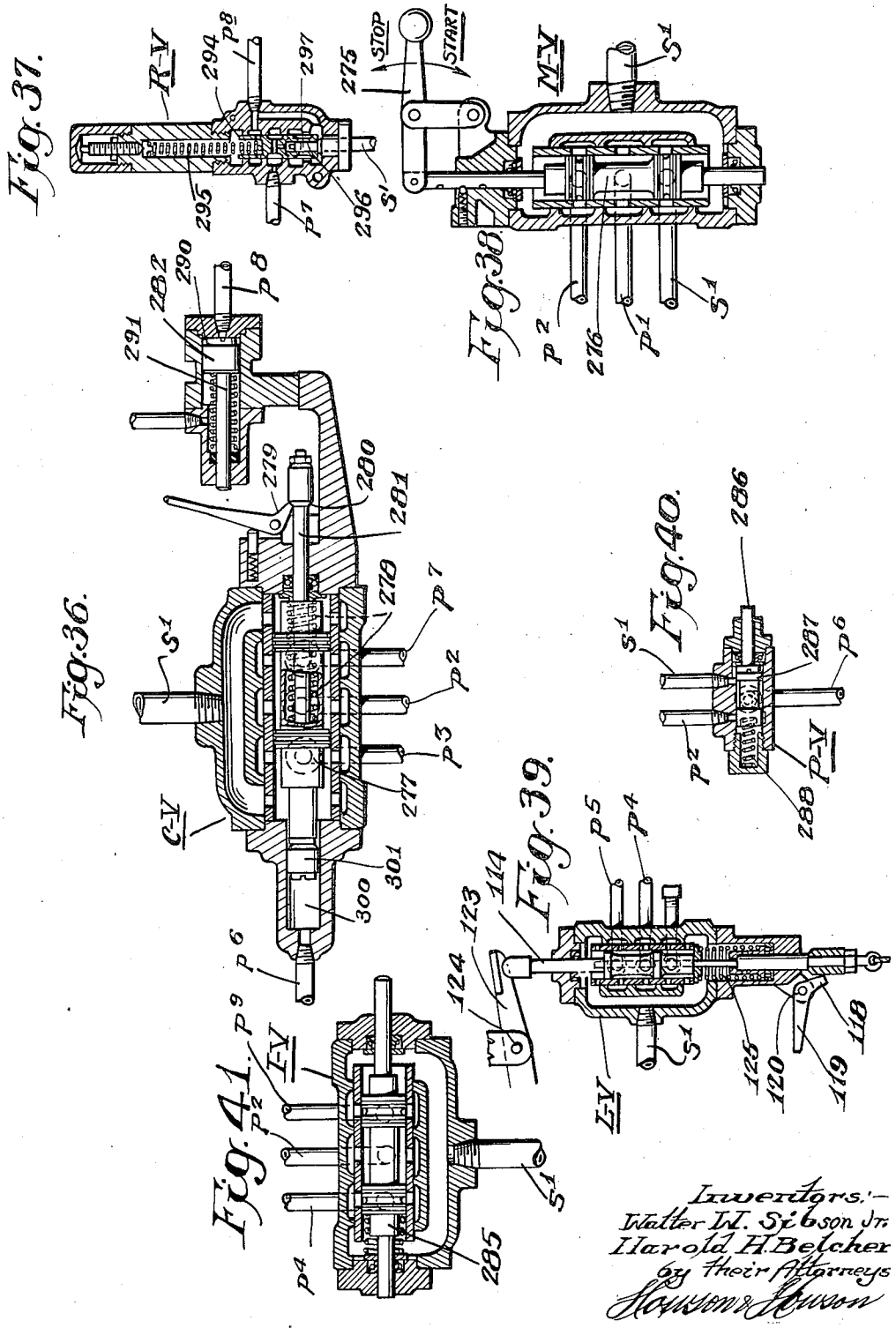

Inventors:—
Walter W. Sibson Jr.
Harold H. Belcher
by their Attorneys
Lawson & Lawson

Jan. 9, 1945. W. W. SIBSON, JR., ET AL 2,366,811

PACKAGING MACHINE

Filed June 24, 1942 17 Sheets-Sheet 17

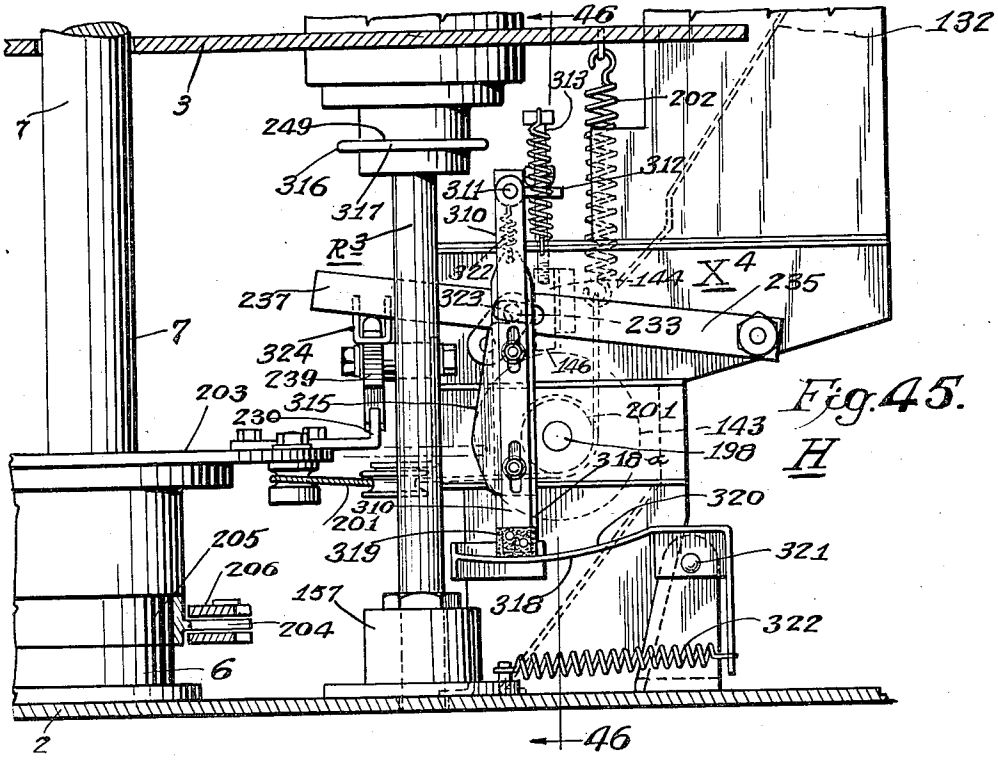

Fig. 45.

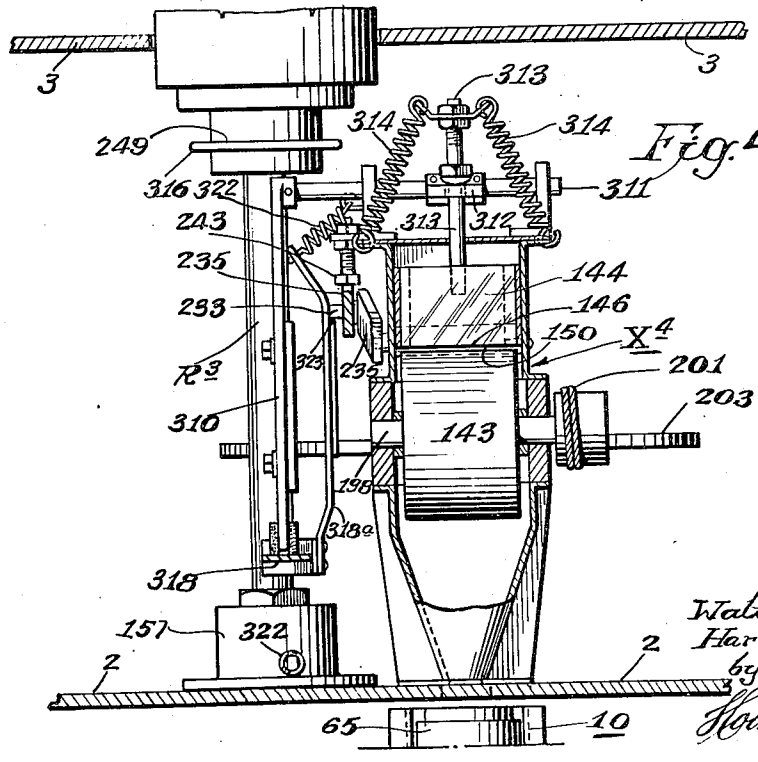

Fig. 46.

Inventors:-
Walter W. Sibson Jr.
Harold H. Belcher
by their Attorneys
Howson & Howson

Patented Jan. 9, 1945 2,366,811

UNITED STATES PATENT OFFICE

2,366,811

PACKAGING MACHINE

Walter W. Sibson, Jr., and Harold H. Belcher, Philadelphia, Pa., assignors to Proctor & Schwartz, Incorporated, Philadelphia, Pa., a corporation of Pennsylvania

Application June 24, 1942, Serial No. 448,306

38 Claims. (Cl. 226—23)

This invention relates to packaging apparatus, and particularly to a fully automatic machine for filling containers, which are primarily closed at one end, to a definite axial dimension, within prescribed tolerances with respect to the closed end of the container.

More especially, the present invention relates to a package filling machine wherein the contents of each container is progressively increased by measured increments, intermittently deposited in the container; and wherein each increment is compacted in the container before the next increment is admitted, whereby the complete composite contents of the container will be of substantially uniform density throughout the aforesaid predetermined axial dimension thereof.

Specifically, the present invention relates to a machine for filling the cylinders or casings of incendiary bombs, with divided or granulated particles of compactable materials, further description of which would appear to be unnecessary for a clear understanding of the present invention.

The present invention further relates to safety apparatus for detecting irregularities in the intended operations, or failures of the various component units of the machine; and to apparatus for controlling subsequent operations of the machine in the event of failure or irregular operation of any one or more of said units.

Another feature of the present invention resides in providing apparatus for detecting failure on the part of the operator to remove a filled package from the machine and for detecting failure on the part of the operator to have placed an empty package in the machine at the initial station where the filled packages are normally removed from and empty packages installed in the carriers provided for supporting the packages individually in the machine, prior to the beginning of the filling cycle for each package; the provision of apparatus for detecting the presence of any substantial body of matter in a presumably empty package which has been installed in a carrier for filling; and the provision of apparatus for controlling the operation of the machine to prevent initial operation at the beginning of a new filling cycle whenever any of the aforesaid irregularities occur, and whenever certain irregularity occurs in the operation of various units of the machine during the filling or compacting operations of the machines.

The construction and operation of the machine, as a whole, and the component units thereof, in detail, will be fully disclosed hereinafter, references being had to the accompanying drawings of which:

Fig. 1 is a partial sectional elevation of the machine as taken on the line 1—1, Fig. 3;

Fig. 2 is a sectional plan view taken on the line 2—2, Fig. 1;

Fig. 3 is a sectional plan view taken on the line 3—3, Fig. 1;

Fig. 4 is a sectional plan view taken on the line 4—4, Fig. 1;

Fig. 5 is a sectional plan view taken on the line 5—5, Fig. 1;

Fig. 6 is a sectional plan view taken on the line 6—6, Fig. 1;

Fig. 7 is a sectional plan view taken on the line 7—7, Fig. 1;

Fig. 8 is a vertical sectional view taken on the line 8—8, Fig. 6;

Fig. 9 is a vertical sectional view taken on the line 9—9, Fig. 6;

Fig. 10 is a vertical sectional view taken on the line 10—10, Fig. 2, through the first station where full containers are removed from the carriers and empty containers are placed in the carriers;

Fig. 11 is a vertical sectional view taken on the line 11—11, Fig. 10;

Fig. 12 is a sectional plan view taken on the line 12—12, Fig. 10;

Fig. 13 is a sectional plan view taken on the line 13—13, Fig. 10;

Fig. 14 is a vertical sectional view taken on the line 14—14, Fig. 10;

Fig. 15 is a partial vertical sectional view taken on the line 15—15, Fig. 4, through the second station where inspection of the carriers is made and with other parts of the machine omitted for the sake of clarity;

Fig. 16 is a vertical sectional view taken on the line 16—16, Fig. 3, through the third station, where the first increment of the contents of each container is placed therein;

Fig. 17 is a side elevation of the filling apparatus shown in Fig. 16;

Fig. 18 is an end view of the filling apparatus shown in Fig. 16;

Fig. 19 is a sectional view taken on the line 19—19, Fig. 18;

Fig. 20 is a sectional elevation taken on the line 20—20, Fig. 7, through the station where the last increment of the contents of each container is placed therein;

Fig. 21 is a sectional plan view taken on the line 21—21, Fig. 20;

Fig. 22 is a sectional plan view taken on the line 22—22, Fig. 20;

Fig. 23 is a sectional elevation taken on the line 23—23, Fig. 4, through the station where the first increment is pressed in the container;

Figs. 24, 25 and 26 illustrate the first, second and third increments being pressed in the container;

Fig. 27 is a sectional elevation taken on the line 27—27, Fig. 4, showing the fourth increment in place and ready for pressing in the container;

Fig. 28 illustrates the fourth increment as being pressed in the container;

Figs. 29, 30 and 31 illustrate the fifth increment as being prepared for entrance into the container;

Fig. 32 illustrates the fifth increment as being pressed in the container;

Figs. 33 and 34 are respectively a sectional plan view and sectional elevation illustrating the mechanism for forming and ejecting the fifth increment from the apparatus shown in Figs. 20 to 22 inclusive;

Fig. 35 is a piping diagram of the cylinders, valves etc. for controlling the various operations of the machine in proper sequence;

Figs. 36 to 41 inclusive illustrate the various valves in section;

Fig. 42 is a sectional elevation of a detail of the invention, taken on the line 42—42, Fig. 5;

Fig. 43 is a sectional plan view taken on the line 43—43, Fig. 42;

Fig. 44 is a sectional elevation of another detail of the invention, taken on the line 44—44, Fig. 7;

Fig. 45 is a sectional elevation taken on the line 45—45, Fig. 3; and

Fig. 46 is a sectional elevation taken on the line 46—46, Fig. 45.

The machine comprises a rigid framework which, in the present instance, includes four horizontal, vertically spaced deck plates or platforms 1, 2, 3 and 4 respectively. These four decks are maintained in fixed vertically spaced relation to each other by a series of standards or uprights 5, 5, which are spaced apart angularly about a common vertical axis located at the geometric centers of the several decks of the machine.

Coaxially aligned and coextensive with a common vertical axis of the machine, and fixedly supported in bearings 6, 6 carried by the several horizontal decks 1, 2, 3 and 4 is the main shaft 7 of the machine, on which is rotatably mounted, between the bottom deck 1 and the next upper deck 2, a package supporting drum 8.

The drum 8, in the present instance, is of polygonal cross-section, in plan, and secured to the perimeter of the drum 8, in equal angularly spaced relation to each other, is a plurality of package carriers 10, twelve in number in the present instance (see Fig. 2).

The drum 8 and its twelve package carriers 10 are intermittently rotated, as a unit, about the vertical axis 7 of the machine, to bring each carrier 10 into position at each of twelve separate and distinct stations on the machine, consecutively. For the purpose of identification, these stations are alphabetically designated A, B, C, D, E, F, G, H, I, J, K and L.

As a matter of general description, an empty package Z is placed in, and locked against accidental displacement from, one of the carriers 10 at the intitial station A (see Figs. 2 and 12), after which, assuming that all conditions hereinafter described are satisfied, the drum 8 is rotated to the extent of 30 degrees and indexes the empty container Z at station B (see Figs. 2, 4 and 15).

Station B is a gauging or detecting station where inspection is mechanically made to detect whether or not there is a container in place in the carrier 10, and whether or not there is any matter of any kind in the container. If an empty container Z is properly installed in the carrier 10, which is located at station B, the drum 8 is then rotated another 30 degrees and places the still empty container in position at station C (see Figs. 2, 3 and 16), to receive the first increment of the material with which the container is to be filled.

At station C, the first increment Y^1 (see Fig. 23) of the contents of the package is deposited in the empty container Z by a suitable filling or dispensing unit X^1 (see Figs. 16, 17, 18 and 19). After the first increment Y^1 has been deposited in the container Z, at station C, the drum 8 is rotated another 30 degrees and places the partially filled container Z in the first pressing position at station D (see Figs. 2, 3 and 23).

At station D, the initial increment Y^1 is compacted to uniform density in the bottom of the container Z (see Fig. 24), by a vertically reciprocal ram R^1, after which the container Z is moved to station E (see Figs. 2, 3 and 16).

At station E, the second increment Y^2 is deposited in the container Z, on top of the previously compacted initial increment Y^1, by a filling unit X^2, after which, by a further 30 degree movement of the drum 8, the container is placed in the second press position at station F (see Figs. 2, 3 and 25).

At station F, the second increment Y^2 is compacted to uniform density on top of and in firm contact with the upper end of the initial increment Y^1 (see Fig. 25), by a ram R^2, after which the container Z is moved to station G (see Figs. 2, 3 and 16).

At station G, a third increment Y^3 is deposited in the container Z, on top of the compacted second increment Y^2, by a feeding or filling unit X^3. A further 30 degree movement of the drum 8 brings the container Z into position H (see Figs. 2, 3 and 26), for compacting of the loosely deposited increment Y^3 to uniform density, on top of and in firm contact with the second increment Y^2, by a ram R^3.

At the end of another 30 degree movement of the drum 8, the container Z comes to rest in position at station I (see Figs. 2, 3 and 16) to receive a fourth increment Y^4 from a feeding unit X^4. The loosely deposited increment Y^4 (see Fig. 27) is subsequently compacted to uniform density against the increment Y^3 by a ram R^4, at station J (see Fig. 28).

From station J, the container Z is moved to station K (see Figs. 2, 3, 20, 21 and 22) to receive a fifth increment Y^5 for subsequent compacting against increment Y^4 at station L (see Fig. 32) by a ram R^5.

When the completely filled container Z is ready to leave the final press station L, the five consecutively deposited and subsequentially compacted increments, Y^1 to Y^5 inclusive, which collectively constitute the complete contents Y of the container Z, have been individually and collectively compressed to a predetermined axial dimension with respect to the inner bottom surface z of the container Z, with the density of the

charge Y substantially uniform throughout its bulk.

The now-full container Z is then moved, by another 30 degree rotation of the drum 8, from the final pressing station L to the initial station A, for removal of the loaded container Z from its carrier 10, for replacement by an empty container of the same kind.

The filled bomb cylinder Z is then ready to receive a closure for its open end in which the firing mechanism of the bomb is housed, which has no bearing on the present invention.

The above cycle of filling and compacting is carried out for each of the twelve containers supported at any one time by the twelve carriers 10, in succession, as a result of which, the various containers are undergoing different stages of the filling and compacting cycle simultaneously.

The drum 8 is moved intermittently, in steps of 30 degrees each, to bring each carrier 10 into vertical alignment with each of the stations A to L consecutively, by a gear 11 (see Figs. 6 and 8) which is rigidly secured to the underside of the drum 8, and which meshes with a pinion 12. The pinion 12 is secured to the upper end of a vertical shaft 13, which is rotatably mounted in bearings 14, 14 carried by the deck 1 and base structure 15 underlying the deck 1.

Secured to the lower end of the shaft 13 is a ratchet wheel 16, which is adapted to be engaged by a pawl 17 pivotally mounted on one end of a lever 18. The lever 18 is loosely mounted on the lower end of the shaft 13 and its second end is pivotally connected to the outer end of a piston rod 19. The piston rod 19 is operated by a piston (not shown) adapted for reciprocation in a cylinder 20.

One end of the cylinder 20 is pivotally connected at 21 to the base structure 15. Motivating fluid, admitted through a flexible conduit P^5, draws the extended piston rod 19 into cylinder 20 and effects rocking of the lever 18 through a segment of 90 degrees into its position shown in Fig. 6, with the pawl 17 abutting one of the ratchet teeth of the ratchet wheel 16, which effects turning of the shaft 13 and gear 12 a corresponding 90 degrees. The 90 degree movement of the shaft 13, through a three-to-one ratio of the gears 12 and 11 effects a 30 degree movement of the drum 8.

Motivating fluid admitted through the flexible conduit P^9 operates the piston rod 19 in the opposite direction and causes the pawl 17 to move idly around the ratchet wheel 16, while the drum 8 remains stationary.

In order to effect absolute axial alignment between each carrier 10 and the axis of the station at which it is positioned, the drum 8 is provided with a plurality of downwardly projecting indexing studs 25, see Figs. 6, 8 and 9.

Diametrically opposite indexing studs 25 are adapted to be respectively engaged and held between pairs of indexing rollers 27, 27, which are carried on arms 28, 28. The indexing arms 28, 28 are respectively secured to the upper ends of vertical indexing shafts 29, 29, which are rotatably mounted in bearings 30, 30 carried by the deck 1 and foundation structure 15.

On the lower ends of the shafts 29, 29 are levers 31, 31. The outer end of each lever 31 is connected to one end of a resilient link 32, the opposite end of which is slidably mounted in a bracket 33 secured to the foundation structure 15. On each link 32 is an adjustable collar 34, between which and the bracket 33 is confined a compression spring 35, encircling the link rod 32. The springs 35 tend at all times to rock the shafts 29 and levers 28 in a manner to cause the indexing rollers 27, 27 to engage a diametrically opposite pair of the indexing pins 25, 25, and thereby align the carriers 10 with the axes of the stations A to L inclusive. The indexing mechanism also serves to retain the drum 8 in a fixed position during the idle return movement of the drum-actuating piston rod 19.

Each of the package carriers 10 (see Figs. 10 to 14 inclusive) comprises a frame 40 of substantially U-shaped cross section arranged vertically, with the open side of the frame facing radially outward from the axis of the drum 8.

The upper end of each frame 40 is pivoted at 41 to one end of a suspension link 42, the opposite end of which is pivoted at 43 to a horizontal arm of an L-shaped bracket 44. A vertical arm 45 of the bracket 44 is adjustably mounted on one of the outer flat vertical surfaces 46 which constitute the perimeter of the polygonal drum 8, and is secured in position thereon by bolts 47. Between the suspension link 42 and the horizontal arm of the carrier supporting bracket 44, is a compression spring 48, which, at all times, tends to rock the link 42 upwardly and thereby move the carrier 10 upwardly, in the direction of its longitudinal axis.

The upward movement of the frame 40 is limited by adjustable studs 49, which, in the present instance, are carried by the frame 40 and engage the undersides of the heads 50 of the bolts 47 by which the brackets 44 are secured to the drum 8.

The arrangement of the suspension links 42 provides for independent axial movement of the package carriers parallel to the axis of the drum 8 for reasons which will more fully hereinafter appear.

The lower end of the frame 40, in each instance, is guided in its vertical movement by a roller 51 which is interposed between the back wall 52 of the frame 40 and the outer flat face 46 of the drum 8, said roller being confined in a cage 53 mounted on the rear wall 52 of the frame 40.

Outward swinging movement of the frame 40, with respect to the drum 8, is prevented by a vertical bar 54, which is secured to the back wall 52 of the frame 40 by vertically spaced bolts 55, 55, and a horizontal bar 56 lying inside the back wall 52 of the frame 40, and secured at its opposite ends by bolts 57, 57 to the drum 8. The horizontal bar 56 is spaced from the surface 46 of the drum 8 by sleeves 58, which encircle the bolts 57 and project through the slots 59 formed in the rear wall 52.

Secured in each of the side walls or legs 60, 60 of the U-shaped frame 40 are trunnions 61, 61, which are in axial alignment with each other. The trunnions 61, 61 pivotally support the upper end of a chuck and funnel element 65.

In the present instance, the packages Z are in the form of metal cylinders z^1, open at the upper end and closed at the lower end by the head or plug z^2 which provides the inner bottom surface z of the package.

The chuck and funnel element 65 is bored accurately to fit the outside diameter of the cylinder z^1, as indicated at 66. The upper edge z^4 of the cylinder z^1 abuts against an annular shoulder 68, formed in the upper part of the chuck and funnel element 65, and limits the upward axial movement of the package within the chuck. The lower end 67 of the chuck 65 is spaced above the

upper surface z^3 of a diametrically enlarged flange on the head z^2 of the particular type of package shown.

The extreme upper part of the element **65** is provided with a tapered bore **69**, which functions as a funnel for directing the successively deposited increments of the contents of the package through a straight axial bore **70** of the element **65** into the open end of the package Z.

In order to prevent lateral deformation of the package Z when the various increments of the contents are placed under pressure, the lower or chuck portion of the element **65** is adapted to rigidly and releasably confine the package Z therein. For this purpose, the element **65** is provided with a lateral or transverse cut **71**, which passes through substantially two thirds of the diameter of the element **65**, and with three longitudinal cuts **72**, **73** and **74** (Fig. 1) extending from the transverse cut **71** to the lower edge **67** of the element **65**, thereby dividing the chuck portion of the element **65** into three separate and distinct jaw sections **65***a*, **65***b* and **65***c*.

The jaw section **65***a* remains in integrally united relation to the upper or funnel portion **69—70** of the element **65** which lies above the cut **71**, while the jaws **65***b* and **65***c* are rendered movable with respect to the jaw **65***a* and lie substantially radial with respect to the axis of the bore **66** in which the cylinder Z is adapted to be carried.

In order to provide for radial movement of the jaws **65***b* and **65***c*, the jaws **65***a*, **65***b* and **65***c* are embraced, with the exception of the area immediately adjacent the longitudinal split **74**, by a resilient split clamp ring **75**, which is secured to the parts **65***a*, **65***b* and **65***c* by bolts **76**, **77** and **78** respectively.

The resilient clamp ring **75** is provided with outwardly projecting flanges **79**, **79**, which extend longitudinally of the chuck and which are disposed at opposite sides respectively of the split **74**.

Vertically spaced bearings **80**, **80** are secured to one of the flanges **79** of the split ring **75** and extend through openings **81**, **81** formed in the other of said flanges (see Fig. 11). Rotatably mounted in the bearings **80**, **80** is an operating shaft **82**, on which is secured an eccentric or cam **83**. Secured to the opposite ends respectively of the shaft **82**, and extending laterally across the flanges **79**, **79** of the clamp ring **75**, is a U-shaped handle **85**, by which the cam **83** is adapted to be rotated to bear against one of the flanges **79** and thereby effect contraction of the ring **75** and the jaws **65***a*, **65***b* and **65***c* into rigid gripping contact with the cylinder Z confined in the bore **66** of the chuck **65**.

The ends **86**, **86**, of the U-shaped handle **85**, are adapted to bear against the outer edge face of one of the legs **60** of the U-shaped frame **40**, whereby, as the handle **85** is swung outwardly to release the jaws of the chuck **65**, the ends **86** of the handle **85**, in bearing against the face of the leg **60**, will swing the chuck outwardly about the aligned axes of the trunnions **61**, **61**, to a position wherein the closed end z^2 of the package Z will clear the outer edge **87** of a table **88** which is formed in the lower end of the frame **40** for supporting the package Z in the chuck **65** during the pressings of the increments Y^1 to Y^5 inclusive.

The tables **88** are rigidly secured in the lower ends of the frames **40** between the legs **60**, **60** thereof and are provided with cam surfaces **89**, **89** adapted to slide up on anvil bosses **90**, **90** on the deck **1** for raising the frames **40** clear of said anvils and the surface of the deck **1** as the frames **40** approach the stations B to L inclusive, should the springs **48** fail to do so while the carriers **10** are being moved from one station to the next.

Station A is a clear station, that is, there is no mechanism located at this station which would interfere with the removing of the filled containers from the carriers **10**, or with the placing of empty containers in the carriers, or with the locking of the chucks by which the containers are held in the carriers.

The inspecting and detecting mechanism located at station B includes a vertical cylinder **91**, in which is slidably mounted a piston **92** and a piston rod **93**. The piston rod **93** is provided with a telescoping extension **95** having an axial cavity **94** in which the lower end of the piston rod **93** is slidably mounted. The lower end of the extension **95** is slidably mounted in a guide **96** which is secured to the horizontal deck **2**. A spring **97** is positioned in the axial cavity **94**, between the lower end of the piston rod **93** and the base of said cavity **94**, and tends at all times to extend the telescoping piston rod **93—95** axially.

Secured to the piston rod **93**, above the upper end of the telescoping extension **95**, is a collar **98**. The collar **98** is provided with a lateral depending arm **99** to which is pivotally connected a lever **100**. One end of the lever **100** is slotted at **101** for the reception of a pin **102**, which is carried by the upper end of the piston rod extension **95**. The opposite end of the lever **100** lies adjacent one of the upright members **5** of the framework of the machine and is adapted, when the piston **92** moves upwardly to its extreme position, to engage a collar **103** on the upright **5** and rock the lever **100** about its pivot **104**, by which the extension **95** is moved upwardly on the piston rod **93** against the action of the spring **97**.

When the drum **8** stops with one of the carriers **10** in alignment with the telescoping piston rod **93—95**, at station B, fluid under pressure is admitted through a pipe P^7 to the cylinder **91**, above the piston **92**, and effects a lowering of the piston rod **93**. As the piston rod **93** moves downwardly, the pivot **104** for the lever **100** also moves downwardly while the end **106** of the lever **100** remains in contact with the under side of the collar **103**, whereby relative elongating movement is effected between the piston rod **93** and its extension **95**, by the spring **97**, until a stop **107** on the lever **100** engages a stop **108** carried by the arm **99**. Continued downward movement of the now extended piston rod **93—95**, with the lever **100** in its broken line position as shown in Fig. 15, projects the lower end **110** of the telescoping piston rod **93—95** through an opening **109** in the deck **2** and into the open end of the package chuck **65** which, at that time, is in axial alignment with the piston rod **93—95**.

The maximum travel of the lower end **110** of the telescoping piston rod **93—95** is sufficient to cause said end to travel downwardly through the carrier **10** to a position beyond the plane which the bottom surface *z* of a package Z disposed in the aligned chuck **65** would normally occupy. If an empty package is in position within the chuck, the lower end **110** of the gauging or detecting element afforded by the telescoping piston rod **93—95** engages the surface *z* and effects a slight compression of the spring **97** and a consequent rocking of the lever **100** about its pivot **104** into its dotted line position shown in Fig. 15.

However, if there is no package Z in the chuck 65, the lower end 110 of the gauge 93—95 continues to move downwardly in the fully extended relationship of the relatively movable parts 93—95.

Secured at a point 111 to the lever 100 is one end of a cable 112, the opposite end of which is secured at 113 to a vertically movable rod 114 of a latch valve L—V, which is rigidly secured in position adjacent the cylinder 91.

If there is a package in the chuck 65 the lever 100 is rocked slightly from its broken line position into its dotted line position (Fig. 15), against the action of the spring 97, by contact of the lower end 110 of the gauge 93—95 with the surface z of the package Z, as above noted, the cable 112 will exert no pull on the rod 114 of the valve L—V. However, if there is no package in the chuck and the lever 100 continues its downward movement, in its broken line position shown in Fig. 15, the lever 100 will exert a pull on the cable 112 and move the valve rod 114 downwardly until an annular shoulder 116, formed on a collar 117 which is secured to the valve rod 114, is lowered to a plane below the tip 118 of a latch 119, which is pivoted at 120 to the casing of the valve L—V.

Latching of the valve rod 114, as noted above, will, as will be more fully described hereinafter, prevent passage of operating fluid through the valve L—V, which normally would effect operation of the piston rod 19 in the indexing cylinder 20, by which the drum 6 is normally moved to advance the packages from one station to the next. Thus the automatic operation of the machine is interrupted if there is no empty container Z in the carrier 10 located at station B. The piston 92 is then returned to its upper position, permitting an empty container Z to be placed in the chuck 65 indexed at position B.

Should the operator have failed to remove a filled container from the chuck 65, while positioned at station A, or should a package Z contain some foreign matter when the package arrives at station B, the downward movement of the gauge 95 would be interrupted by such obstruction.

Interruption of the downward movement of the gauge 95 does not interrupt the downward movement of the piston rod 93 which continues, under the influence of motive fluid entering the cylinder 91 through the pipe P^7 until the spring 97 is fully compressed and the two parts 93—95 become as one solid element, which finally interrupts the downward movement of the piston rod 93. Stopping of the downward movement of the piston rod 93 effects a building up of pressure in the cylinder 91, above the piston 92.

The lower end of the cylinder 91 is slidably mounted in a guide 121 which is secured to the deck 3, while the upper end of said cylinder is pivotally connected at 122 to one end of a lever 123. The lever 123 is pivoted at 124 to the deck 4 and its second end overlies the upper end of the rod 114 of the latch valve L—V. As the pressure in the cylinder 91 above the piston 92 increases, the cylinder 91 is forced upwardly against the action of the spring 125 in the latch valve L—V (see Fig. 39), thereby rocking the lever 123, about its fixed pivot 124. The rocking of the lever 123, in the manner noted, will cause a downward movement of the valve rod 114 until the latch 119 engages the shoulder 116 and holds the valve rod 114 in its lowered position, as previously described, causing an interruption of the automatic operation of the machine when a full container or a container in which foreign matter is present is located at station B. After the removal of the obstruction, the machine is restarted, and the empty container Z is moved from station B to station C.

When the empty package Z is indexed at position C, the upper funnel-like end 69 of the package chuck 65 is positioned directly under the outlet opening 130 of the filling device X^1, which supplies the first increment Y^1 to the empty package Z (see Figs. 16, 17 and 18).

The filling device X^1 includes a supply hopper 132, a measuring or discharge hopper 133 and an intermediate or flow control hopper 134. The supply hopper 132 is substantially rectangular in cross section. The hopper 132 includes parallel vertical side walls, an inner vertical wall 135, and an outer angular wall or bottom 136. The bottom 136 converges toward the inner wall 135. Immediately above the point of intersection of the plane of the bottom 136 and the plane of the vertical inner wall 135, the inner wall 135 is provided with an outlet passage 137, through which the material flows from the supply hopper 132 into the intermediate or control hopper 134.

The intermediate hopper 134 includes a vertical inner wall 138 which is offset with respect to the inner wall 135 of the supply hopper 132, and which is connected thereto by a top wall 139 lying adjacent the upper edge of the passage 137. In the present instance, the outer wall 140 of the intermediate hopper 134 lies substantially in the plane of and below the inner wall 135 of the upper or supply hopper 132. The lower portion 141 of the outer wall 140 of the intermediate hopper 134 converges toward the inner wall 138 thereof, and said inner wall 138 is provided with a passage 142 through which the material flows from the intermediate hopper 134 into the measuring hopper 133.

Rotatably mounted in the upper feeding unit X^1 is a drum 143, which constitutes a movable bottom for the discharge hopper 133. The inner wall 144 of the discharge hopper 133 is adjustable vertically, by a screw 145, to vary the space between the lower edge 146 of said movable wall or gate 144 and the peripheral surface 147 of the drum 143. The lower portion 148 of the rear wall of the discharge hopper 133 converges toward the inner wall or gate 144 to form an outlet 149 for the discharge hopper 133.

The discharge drum 143 is intermittently rotated in the direction of the arrow (Fig. 16) to carry away predetermined quantities of the material from the hopper 133, through a discharge opening 150 formed between the lower edge 146 of the gate 144 and the peripheral surface 147 of the drum 143, the quantity discharged being governed by the extent of the opening 150 as determined by the vertical adjustment of the gate 144. As the drum 143 rotates, the material carried on the peripheral surface thereof through the discharge opening 150 is dropped through the discharge opening 130 into the funnel-like end 69 of the package chuck 65, and thence into the package.

Any material which tends to remain on the periphery of the drum 143 after said drum stops, and which has passed through the discharge opening 150, is swept from the drum by a doffer 151.

The arrangement of hoppers, as just described, prevents packing of the material in the lower

portions thereof by the weight of the contents of the hoppers, and induces a free flowing of the material in a loose condition of uniform density. The rotation of the drum, to the extent of a predetermined number of degrees, carries away from the measuring hopper a predetermined quantity of the filling material which is deposited in the package as the first increment Y^1. Such a measured quantity of material will fill a predetermined portion of the package Z when compacted or pressed under a predetermined pressure at the next station, D, of the machine.

After the first increment Y^1 has been loosely deposited in the package Z, at station C, the package is advanced to station D (see Fig. 23), where the initial increment Y^1 is pressed and compacted in the lower portion of the container Z by the ram R^1, as indicated in Fig. 24.

The ram R^1 is carried by and forms an extension of a piston rod **155**, which is connected to a piston (not shown) operating in a vertical cylinder **156** supported on the upper side of the horizontal deck **3**. The ram R^1 passes through a guide structure **157** mounted on the horizontal deck **2**. Fluid pressure for lowering the ram R^1 is admitted to the upper end of the cylinder **156** through the pipe P^7, and fluid pressure for withdrawing the ram R^1 is admitted to the lower end of the cylinder **156** through a pipe P^3.

After the first increment Y^1 has been pressed in the container Z and the ram R^1 has been raised clear of the funnel end **69** of the chuck **65**, the container Z is advanced to station E, where the second increment Y^2 is fed into the container by the feeding mechanism X^2, the construction and operation of which is identical with the construction and operation of the unit X^1 by which the first increment was supplied to the container.

The container is then advanced to station F, where the second increment Y^2 is compacted by the ram R^2, in the manner illustrated in Fig. 25. The ram R^2 is operated by a piston in a cylinder **160** to which motivating fluid is admitted and exhausted through pipes P^7 and P^3, for lowering and raising said ram. The cylinder **160** is of the same general construction and is operated in the same general manner as the cylinder **156** previously noted.

From station F, the carrier is advanced to station G, where the third increment Y^3 is placed in the container by the feeding mechanism X^3, which corresponds with and operates in the same general manner as the feeding mechanisms X^1 and X^2 previously noted.

From station G, the container is advanced to station H, where the third increment Y^3 is compacted by the ram R^3, in the manner illustrated in Fig. 26. The ram R^3 is similar in construction to the rams R^1 and R^2, and is operated by a piston in a cylinder **163** to which motive fluid is supplied by pipes P^7 and P^3, in the same general manner as described in regard to the cylinders **156** and **160**.

From station H, the container is advanced to station I, where the fourth increment Y^4 is supplied to the container through the feeding mechanism X^4, which corresponds in general to the construction and mode of operation to the feeding units X^1, X^2 and X^3.

If for any reason the filling units X^1, X^2 and X^3 have failed to deposit the proper amount of material in any container Z, or if any one of said feeding devices has failed completely, as a result of an empty supply hopper, for example, to deposit any material whatsoever in the container, such deficiencies are made up by the filling unit X^4, at station I, in order to bring the first four increments up to a predetermined axial dimension, collectively, with respect to the inner bottom surface z of the container Z.

As shown in Figs. 3, 45 and 46, the ram R^3, at station H, is utilized as a gauge for determining the collective extent of the increments Y^1, Y^2 and Y^3, and as a means for regulating the elevation of the lower edge **146** of the vertical movable gate **144**, of the feeding unit X^4, with respect to the peripheral surface of the feeding drum **143**, whereby a greater depth of material will be carried out of the lower hopper of the unit X^4, by its discharging roll **143**, and deposited in the container underlying the discharge opening of said unit.

Controlling mechanism for the vertical gate **144** includes a vertically hanging lever **310**, which is pivoted at **311** and is provided with a horizontal arm **312**, through which a regulating stem **313** for the gate **144** projects. Springs **314**, **314**, in the present instance, tend to lower the gate **144** and rock the levers **312** and **310**, about the pivot **311**, thereby swinging the lever **310** toward the vertically movable ram R^3. The lever **310** is provided with a cam surface **315**, which is adapted to be engaged by the peripheral edge **316** of a circular element **317** carried by and movable with the ram R^3.

The ram R^3 descends until the increments Y^1, Y^2 and Y^3 are compressed to a predetermined pressure and is then stopped thereby, thus the position of the circular element **317** may vary in elevation with the over-all measurement of the three previously deposited increments.

If the units X^1, X^2 and X^3 have deposited their proper quotas in the container Z, and, if the rams R^1, R^2 and R^3 have compacted the increments Y^1, Y^2 and Y^3 to the proper extent, the ram R^3 is stopped by the compacted increments just as the element **316** reaches the upper end of the cam **315** on the lever **310**, thus the lever **310** is not operated and the gate **144** of the unit X^4 stays in position to deliver a normal quantity of filling material to the container Z.

If, however, there is a deficiency in the container Z the ram R^3 continues to move downwardly. The edge **316** of the annular element **317** engages the cam **315** and rocks the lever **310**—**312**, thereby raising the gate **144** proportionately. When the downward movement of the ram R^3 is eventually stopped by the compacted increments Y^1, Y^2 and Y^3 determination of the amount of material necessary to bring the upper level of the next increment Y^4 into predetermined relation to the plane of the upper open end of the container, has been completed. The gate **144** has been correspondingly set, with respect to the periphery of the drum **143**, to deliver the necessary amount of material from the unit X^4 into the deficient container, when said container is moved out of alignment with the ram R^3 into alignment with the unit X^4, upon the next 30 degree movement of the drum **8**.

In order to maintain the excess supplying adjustment of the gate **144**, from the time of gauging by the ram R^3 until the necessary material is delivered by the unit X^4, a brake arm **318**, having an arcuate surface swung from the axis of the pivot **311**, underlies the lower end of the lever **310**. The lower end of the lever **310** is provided with friction material **319**, which bears against the arcuate surface **320** of the brake lever **318**. The brake lever **318** is pivoted at **321** to a fixed

part of the machine, and a spring 322 tends, at all times, to maintain holding contact between the brake material 319 and the brake surface 320.

After the unit X^4 has delivered the proper amount of material to the deficient container Z, the brake lever 318 is released to permit the lever 310 to be swung again toward the ram R^3 by the springs 314.

From station I, the container is advanced to station J (see Figs. 27 and 28) where the fourth increment Y^4 is compacted in the container by the ram R^4. The ram R^4 is operated by a piston working in a cylinder 166 to which motive fluid is supplied by pipes P^7 and P^3. The ram R^4 is connected to a piston rod 169, which is provided with a deep collar 170 by which the normal stroke of the piston in the cylinder 166 is shortened because of the filling up of the container Z by the successively compacted increments of the filling material.

From station J, the container is advanced to station K where the fifth increment Y^5 is supplied to the container. In the present instance, this fifth increment is composed of material which differs in character from the material of which the increments Y^1, Y^2, Y^3 and Y^4 are composed. In view of this difference in materials a different form of filling mechanism X^5 is provided at station K. This mechanism is shown in detail in Figs. 20, 21 and 22.

The filling apparatus located at station K includes a main hopper 171 which is carried by the horizontal deck 2 and is fed manually through a chute 171*a* leading from a funnel 171*b* located adjacent the deck 4. As shown in Fig. 22, the hopper 171 is substantially circular in cross sectional plan. The hopper 171 includes a bottom 172, which is spaced above the deck 2, and a top 173. Rotatably mounted in a bearing 174, carried by the top 173, is a vertical shaft 175. Secured to the lower end of the shaft 175, adjacent the bottom 172 of the hopper, is a stirring or agitating device 176, which includes a pair of horizontally extending curved blades 177, 177.

The shaft 175 and the blades 177, 177 are rotated in the direction of the arrow (Fig. 22) to force a quantity of the filling material from the main body of the hopper 177 into the lower part of a lateral extension 178 of said hopper, beneath the lower end of a vertically reciprocable plunger 179. The plunger 179 is slidably mounted in a guide bearing 180, carried by the top 173 of the hopper 171, and in a guide bearing 181 carried by a framework 182 above the hopper 171.

The bottom 172 of the lateral extension 178 of the hopper 171 is provided with a discharge opening 182, in axial alignment with the plunger 179, and an opening 183 formed in the deck 2, directly above the container positioned at station K. The discharge opening 182 is normally closed by a plate 184 which is carried by an arm 185. The arm 185 is carried on the lower end of a hollow barrel 186, having bushings 187 and 188 for the reception of a pivot shaft 189. The lower end of the pivot shaft 189 is threaded into the deck 2, while the upper end passes through and is secured in a lateral extension of the cover 173 of the hopper 171. A spring 190 normally tends to rock the lever 185 about the axis of the pivot shaft 189 to maintain the plate 184 in position to close the discharge opening 182.

As the blades 177 revolve and force the material lying in the lower part of the hopper 171 outwardly into the lateral extension 178 thereof, beneath the bottom of the plunger 179, the plunger 179 is moved downwardly, by a lever 191 and cam 192, to compress a portion of the material between the lower end of the plunger 179 and the closure plate 184, as illustrated in Figs. 29 and 30, after which the closure plate 184 is moved laterally out of position from beneath the discharge opening 182, by a cam 193, as the plunger 179 continues to descend, by which a pellet of the material from the hopper 171 is first formed and then ejected, as illustrated in Fig. 31, from the hopper 171 and dropped into the funnel end 69 of the chuck 65. From the funnel 69, the pellet falls into the upper end of the container Z, as the fifth increment Y^5.

The fifth increment Y^5 is then pressed down into the container Z by the ram R^5, after the container has been advanced from station K to station L, as clearly shown in Fig. 32. The ram R^5, like the ram R^4, has a shortened stroke and is operated by a piston in a cylinder 195 which is supplied with motivating fluid through pipes P^7 and P^3.

The feeding of material from the feeding devices X^1, X^2, X^3, X^4 and X^5, located at stations C, E, G, I and K respectively, are operated by a common actuating means during the time the various increments Y^1, Y^2, Y^3, Y^4 and Y^5 are being simultaneously compacted in a number of the packages Z, Z, at stations D, F, H, J and L respectively.

The drums 143 of the feeding devices X^1, X^2, X^3 and X^4, and the agitator 176 of the feeding device X^5, are each operated by a one-way clutch 196 (see Fig. 19). Each clutch 196 includes an inside notched wheel 197 which is secured to the drive shaft on which the device to be operated by the clutch is also secured, such as the shafts 198 for the rolls 143 of the filling units X^1, X^2, X^3 and X^4, and the shaft 175 of the agitator 176 of the unit X^5.

Loosely mounted on the various drive shafts, about the notched wheels 197, are hollow driving drums 199. Clutch rollers or balls 200 are located in the notches of the wheels 197, for gripping the inside peripheral surfaces of the driving drums 199 when said drums rotate in one direction, said rollers being released when the direction of rotation of the drums is reversed. In each instance, a cable 201 is wound around the outer peripheral surface of each driving drum 199.

One end of each of the cables 201 is secured to one end of the spring 202, the opposite end of which is anchored to the framework of the machine at a point remote to the driving drum 199. The opposite end of each cable 201 is secured to a common driving disc 203 (see Fig. 3), which is rotatably mounted on the main central shaft 7 of the machine, between decks 2 and 3.

The driving disc 203 is oscillated to the extent of 90 degrees by a mechanism carried by the deck 2 (see Fig. 7), which includes a lever 204 extending from the hub 205 of the disc 203.

The lever 204 is connected, by a link 206, to one end of lever 207. The lever 207 is pivoted at 208 to the deck 2. The second end of the lever 207 is slotted at 209 for the reception of a pin 210, which is secured to a cross-head 211. The cross-head 211 is secured to a piston rod 212, one end of which extends into a cylinder 213 and is connected to a piston therein (not shown), while the opposite end of said piston rod is slidably mounted in a guide bearing 214 which is secured to the deck 2. The guide 214 is provided with a stop screw 215, axially aligned with the piston rod 212 and adapted to be engaged by one end thereof for

limiting the movement of the piston rod, in one direction, and the resulting oscillation of the driving disc 203. The stop screw 215 also serves as a means for adjusting en masse the discharge of the units X^1, X^2, X^3 and X^4.

As shown in Fig. 3, each of the cables 201 is connected to the driving disc 203 at a point 216. Motive fluid admitted to one end of a cylinder 213, by a pipe P^3, will effect a 90 degree rotation of the disc 203 in the direction of the arrow *x* in said figure. Such rotation of the disc 203 will cause the cables 201 of the feeding units X^1, X^2, X^3 and X^4 to rotate the driving drums 199 idly about the shafts 198 and effect an extension of the springs 202. Fluid pressure admitted to the opposite end of the cylinder 213, through the pipe P^7, will effect a 90 degree rotation of the disc 203 in the opposite direction to the arrow *x*, whereupon the springs 202 will retrieve the cables 201 and rotate the driving drums 199 in the direction wherein the clutch rollers 200 will grip the drums 199 and effect rotation of the shafts 198, and consequently, the feeding drums 143 in each of the units X^1, X^2, X^3, and X^4.

Rotation of the disc 203 in the direction of the arrow *x*, Fig. 3, will effect rotation of the drum 199 of the unit X^5 in a direction to effect rotation of the agitator shaft 175. The spring 202, in this instance, serves merely to retrieve the cable 201 on the return movement of the disc 203.

The operating cam 192 for the plunger 179 of the unit X^5 is also carried by the driving disc 203. When said disc moves in the direction, opposite to that indicated by the arrow *x*, the cam 192, through the lever 191, will lower the plunger 179, as indicated in Figs. 33 and 34, to eject the fifth increment Y^5 and deposit it in the package Z located at station K, at the same time as the drums 143 are discharging the increments Y^1, Y^2, Y^3 and Y^4 from the units X^1, X^2, X^3 and X^4 respectively, at stations C, E, G and I respectively.

During the first portion of the downward movement of the plunger 179, the closure plate 184, beneath the plunger 179, remains in closed position. As the cam 192, on the disc 203, continues to lower the plunger 179, the cam 193, also carried by the disc 203, engages a roller 220 on an arm 221 which projects from the hub 186 from which the arm 185 of closure plate 184 also extends. The cam 193 swings the closure plate 184 out of position beneath the plunger 179 as the cam 192 continues to lower the plunger 179, and thereby permits the plunger 179 to eject the increment Y^5, as indicated in Figs. 29, 30 and 31. The cam 193 in the meantime releases the roller 220 and a spring 222 swings the plate 184 in the opposite direction until the edge of the plate 184 engages one side of the plunger 179.

On the next movement of the disc 203, in the direction of the arrow *x*, a spring 223, connected to the lever 191, raises the plunger 179, and as soon as the lower end of the plunger passes through the bottom 172 of the hopper 171, the spring 222 swings the plate 184 back into position to close the discharge opening 182 of the hopper 171. A shoulder 224 on the lever 221 engages a portion 225 of the framework above the hopper 171, and acts as a stop for positioning the plate 184 directly beneath the discharge opening 182.

The stroke of the plunger 179 is governed by an adjustable stop 226 carried by the guide 181 in axial alignment with the plunger 179. By this arrangement, the volume of the increment Y^5 is accurately controlled.

The disc 203 also carries a series of vertical projections 230 (see Figs. 3, 17 and 18), by which the doffers 151 of the feeding units X^1, X^2, X^3 and X^4 are operated.

As shown in Fig. 17, each of the doffers 151 is secured to a shaft 231 journaled in the side walls of the discharge hoppers 131. On one end of each shaft 231, outside the hopper, is secured a lever 232 which is provided with a crank 233 at its outer end. The crank 233, in each instance, projects into a slot 234 formed in a lever 235, which is pivoted at 236 on the frame of the hopper structure. The lever 235 projects substantially radially inward with its inner end 237 resting on the outer end 238 of a bell-crank lever 239, which is pivoted at 240 to the inner face of the unit X^1, X^2, X^3 or X^4, as the case may be. The second arm 241, of the bell-crank lever 239 lies in the path of one of the projections 230 on the disc 203. A spring 242, normally stretched between the arm 238 of the bell-crank lever 239 and the frame work of the unit, returns the arm 238 in a raised position, which consequently maintains the lever 235 in a raised position in contact with the stop 243.

As the disc 203 moves to its extreme position, in the direction opposite to the arrow *x*, Fig. 3, the projections 230 strike the arms 241 of the bell-crank levers 239, and effect a lowering of the arms 238 of said bell-crank levers. This action permits the levers 235 to drop of their own weight, by gravity. In so doing, the levers 235 rock the doffers 151 which sweep off any material which may have been left on the peripheries 147 of the drums 143, outwardly beyond the gates 144 of the units X^1, X^2, X^3 and X^4.

If, for any reason, substantial resistance should be presented to the action of the doffers 151 of units X^1, X^2 and X^3, no mechanical forcing of the doffers will be effected. In the same manner, the actual turning of the drums 143 is effected by the springs 202, thus if any substantial resistance is presented to the rotation of these drums, such resistance will prevent the springs from rotating the drums. The springs will not be of sufficient strength to force the drums to rotate against such substantial resistance. These are safety provisions made to prevent undue pressure being applied to the material which, in the case of explosives, might prove disastrous if the elements were mechanically forced into performance of their intended duties against some metal obstruction, for example, which may have been accidentally or otherwise dropped into the hoppers, and which would find its way to the point where relative movement, under substantial force, between the doffer and the obstruction, or the rollers and the obstruction, might cause an explosion.

The operating disc 203 also effects release of the brake lever 318 of the mechanism for feeding excess material to starved containers by the feeding unit X^4, to permit return of the lever 310 to normal position. In the present instance, this release is effected by the crank pin 233 on the lever 232 by which the doffer 151 of the unit X^4 is operated. The crank pin 233, in this instance, engages a horizontal shoulder 323 formed on a vertical extension 318*a* of the brake lever 318. The outer end of the arm 235, which actuates the crank pin 233, is provided with a yoke 324 which underlies the doffer controlling bell-crank lever 239 of the unit X^4 and which is moved down-

ward, positively, by one of the vertical projections 230 on the operating disc 203. The bell-crank lever 239 moves the doffer actuating lever 235 down, positively, and effects rocking of the brake lever 318, downwardly, to release the lever 310. The brake lever 318 is returned to normal position, by the spring 322 when the disc 203 reverses its movement for starting a new feeding cycle.

For safety reasons, where relative movement between metal parts is required, and where the parts would normally be made of iron or steel, one of the relatively movable parts in the present instance is composed of a non-ferrous metal, such as brass, for example.

The machine also includes safety devices for preventing actuation of the drum 8 while any of the rams or plungers 95, R^1, R^2, R^3, R^4 and R^5 are in a lowered or partially lowered position, with their lower ends below the upper ends of any of the twelve carriers 10.

Disposed in the radial plane of each of the stations B, D, F, H, J and L is a bell-crank lever 245 (see Figs. 1, 4, 23, 27 and 28). Each of the bell-crank levers 245 is pivoted, at 246, to a bracket 247 which is secured to the under side of and depends from the horizontal deck 3.

One arm 248 of the bell-crank lever 245, in each instance, projects radially outward over a shoulder 249 forming part of each of the ram or plunger structures R^1, R^2, R^3, R^4, R^5 and 95. A second arm 250 of each of the bell-crank levers 245 projects vertically downward and is provided at its lower end with a grooved pulley 251. A third arm 252 of each bell crank lever 245 is adapted to engage an adjustable stop 253 carried by the supporting bracket 247.

A flexible cable 255 is trained around the outer sides of the series of six grooved pulleys 251, within the peripheral grooves of said pulleys. The opposite ends of the cable 255 are respectively anchored at 256 (see Figs. 1, 4 and 42) to a drum 257. The drum 257 is secured to the lower end of a vertical shaft 258, which is rotatably mounted in bearings 259, 259 carried by the deck 3.

The upper end of the shaft 258 projects through the deck 3 and is provided with a drum 260, to which is secured one end 261 of a flexible cable 262 (see Fig. 5). The second end of the cable 262 is attached to one end of a spring 263, the opposite end of said spring being secured to an adjustable anchor bolt 264 carried by the deck 3. The spring 263 is maintained under constant tension, and through the cable 262 and drum 260 tends to rotate the shaft 258 in one direction. Rotation of the shaft 258, in said direction, correspondingly rotates the lower drum 257 and winds the two ends of the cable 255 thereon. Such winding of the cable 255 effects a foreshortening of said cable, which rocks the bell-crank levers 245, when the rams and plungers are in the lowered position, until the arms 252 of the bell-crank levers 245 rest against their normal limit stops 253.

As the plunger 95, and each of the rams R^1, R^2, R^3, R^4 and R^5 is raised to its extreme upward position, the shoulder 249 associated therewith engages the arm 248 of the associated bell-crank lever 245 and swings the arm 250 of said bell-crank lever radially outward. Such rocking of the bell-crank levers tends to expand the ring formed by the cable 255. Such expanding of the cable ring rotates the drum 257 conversely to the force exerted by the spring 263. This effects a reverse rotation of the shaft 258.

Circularly adjustable on the shaft 258 is a double armed lever 265, one arm 266 of which is adapted to engage one end 268 of an axially slidable rod 269. The rod 269 controls a piston valve within a valve casing I—V which is secured to the deck 3. When all of the plungers and rams have attained their extreme upper positions, and not until such positions have been reached by each and all of the rams and plungers, the shaft 258 has been rotated to an extent where the lever 266 has moved the valve rod 269 in the direction of the arrow *y* (see Fig. 5) to a position where the piston valve, within the casing I—V, has aligned the grooves of the piston with the parts in the valve casing to permit motivating fluid to flow through said casing and thereby permit operation of the piston in the cylinder 20, by which rotation of the drum 8 is effected.

In order to compensate for stretching of the cable 255, the arm 266, in the present instance, is provided with a radially bored boss 271 in which is slidably mounted a detent 272. The detent 272 is projected into the spaces between the teeth 273 of a gear 274, which is secured to the opposite end of the shaft 258, the detent being rigidly retained in contact with the gear by a set screw 270. When stretching of the cable 255 develops, the detent 272 is retracted from the gear 274 and the lever 265 is rotated about and relative to the shaft 258 until the lever arm 266 is in position to shift the valve rod 269 to the proper extent for operating the valve within the casing I—V, whereupon the detent 272 is reentered in the gear 274 and locked in position by the set screw 270. The lever arm 267 functions as a safety device to engage the center shaft 7 and prevent excessive turning of the shaft 258, by the spring 263, in the event of the cable 255 breaking or being accidentally displaced from the groove of one or more of the pulleys 251 on the bell-crank levers 245.

Referring now to the piping diagram shown in Fig. 35, and to the detailed constructions of the various valves employed therein, as shown in Figs. 36 to 41 inclusive, motivating fluid is drawn from a sump S by a motor driven pump P and forced, under predetermined pressure, through a main pressure line P^1 to a main manually operable control valve M—V (see Fig. 38).

The valve M—V, as shown in Fig. 38 is in a neutral position, with the machine stopped. To start the machine, the handle 275 is moved in the direction of the arrow marked "Start," which slides the valve piston 276 into position to permit pressure fluid to flow from the pressure line P^1 into and through the pressure line P^2, to a cycle-control valve C—V, an indexing control valve I—V, and to a pilot valve P—V.

The cycle valve, C—V, as illustrated in Fig. 36, includes a piston 277 which is being constantly urged to move, to the left, by a spring 278, and which, as shown, is prevented from so moving by a latch 279 engaging a shoulder 280 on the valve stem 281. When the latch 279 is released the spring 278 forces the piston 277 to the left from the position shown in Fig. 36.

With the latch released, as noted above, pressure fluid flows from the pressure line P^2 into the line P^3, and thence to the lower ends of all of the cylinders 91, 156, 160, 163, 166, 195, and to one end of the filling cylinder 213, thereby raising the gauging plunger 95 (station B), the ram R^1 (station D), the ram R^2 (station F), the ram R^3 (sta-

tion H), the ram R^4 (station J), and the ram R^5 (station L), and causing the filling unit operating disc 203 to "set" the filling springs 202 for future operation of the filling units X^1 to X^5 inclusive.

With the raising of the aforesaid rams and plungers to their extreme upper positions, the piston 285 of the indexing valve I—V (Fig. 41) is shifted to the left to permit pressure fluid to flow from the pressure line P^2 into and through the pressure line P^4 to the latch valve L—V (Fig. 39).

If the gauging plunger 95 has previously indicated that an empty container Z was properly in place at station B, pressure fluid will flow from the pressure line P^4 to and through the pressure line P^5 into the right hand end of the indexing cylinder 20, causing the drum 8 and its twelve carriers 10, with the twelve containers Z therein, to advance one station each.

When the drum 8 has completed its 30 degree movement, the outer end of the pawl-carrying lever 18, by which such movement of the drum is effected, engages the stem 286 of the pilot valve P—V (see Fig. 40) and moves the piston 287 of said valve against its spring 288, to permit pressure fluid to flow from the pressure line P^2 to and through a pressure line P^6 to the cylinder 300 at the one end of the cycle-control valve C—V (Fig. 36). Pressure entering the cylinder 300 through the line P^6 acts against the piston 301 and moves the piston valve 277 into the position shown in Fig. 36, in which it is retained by the latch 279.

The above noted shifting of the valve piston 277, permits pressure fluid to flow from the pressure line P^2 through the valve C—V to and through a pressure line P^7 to the upper ends of the cylinders 91, 156, 160, 163, 166, 195 and to the right hand end of the filling cylinder 213; thereby lowering the gauging plunger 95, the rams R^1, R^2, R^3, R^4 and R^5, and operating the disc 203 to effect simultaneous discharge of the increments Y^1, Y^2, Y^3, Y^4 and Y^5 into the containers Z, Z located at stations C, E, G, I and K respectively.

As the plungers and rams descend, the indexing valve I—V is operated to throw the right hand end of the indexing cylinder open to exhaust to the sump line S^1, and at the same time permit pressure fluid to flow from the line P^2 through line P^9 to the left end of the cylinder 20 to return the pawl 17 to position to start the next 30 degree movement of the drum 8.

The descent of the rams R^1 etc. continues while pressure fluid flows from the pressure line P^7 to a reversing valve R—V (Fig. 37). The piston 294 of the valve R—V is pressed in one direction by a spring 295. The lower end of the piston 294 is bored axially to form a cylinder 296. A plunger 297 is fixed in the valve casing and extends into the piston bore 296. Fuid from the pipe P^7 enters the upper end of the piston bore 296 and when the pressure of this fluid exceeds the pressure exerted by the spring 295 the piston is raised, by-passing the fluid from the pipe P^7 into a pipe P^9, and cutting off communication between the pipe P^3 and the sump line S^1.

The pipe P^8 delivers the fluid to the cylinder 290, carried by the valve C—V where it acts against a piston 282 and spring 291 to release the latch 279. The spring 278 then returns the piston 277 to the left (Fig. 36) throwing the line P^7 to exhaust through the sump line S^1 and connecting the line P^3 to the fluid pressure line P^2, whereby the pistons in the cylinders 91, 156, 160, 163, 166, and 195 are raised, as previously described.

Movement to the right of the valve piston 277, cuts off the pressure fluid from the pipe line P^7 and connects this pipe line with the sump line S^1 to relieve the upper ends of the cylinders 91, 156, 160, 163, 166, and 165 and the right hand end of the filling cylinder 213.

At the same time the pipe line P^3 is connected through the piston valve 277 with the fluid pressure line P^2 to effect raising of the plunger 95, rams R^1, R^2, R^3, R^4, R^5, and to operate the filling cam disc 203 to place the springs 202 of the filling units X^1, X^2, X^3, X^4 and X^5 under tension for the reasons hereinbefore noted.

This completes one filling and compacting cycle of the machine and unless one or more of the safety devices hereinbefore described has become active the machine will proceed to go through another filling cycle automatically.

If the machine is to be stopped for any reason, manually, the handle 275 of the main or manual valve M—V is moved in the direction of the arrow marked "stop" to the position shown in Fig. 41. However if the machine is to be shut down for any considerable length of time, the movement of the handle 275 is continued in the direction of the "stop" arrow until the piston valve 276 is lowered to its maximum position, wherein the pressure lines P^1 and P^2 are each brought into communication with the sump line S^1 and whereby pressure in the machine as a whole is released.

If the machine is automatically stopped by actuation of the latch valve L—V, for any of the reasons noted above, this valve must be reset manually. Such manual resetting of the latch valve L—V will restart the machine without having to operate the main valve M—V.

In order to prevent the various rams and pistons from moving too rapidly in their reciprocations, flow-control valves F—V or needle valves N—V are provided to regulate the flow to and from the opposite ends of the various cylinders etc.

We claim:

1. A filling machine, comprising means for depositing a plurality of separate increments of filling material in a container successively, and means for applying a predetermined pressure to each increment prior to depositing the next increment in the container and means responsive to one of said pressure applying means for controlling a succeeding increment disposing means to vary the deposit thereof into said container.

2. A filling machine, comprising means for depositing a plurality of separate increments of filling material in a container successively, means for applying a predetermined pressure to each increment prior to depositing the next increment in the container means responsive to one of said pressure applying means for controlling a succeeding increment disposing means to vary the deposit thereof into said container, and means for applying a predetermined pressure to the plurality of assembled increments as a unit.

3. A filling machine comprising means for depositing a plurality of separate increments of filling material in a container, means for pressing said increments alternately with the depositing of said increments in the container and means operable by one of said pressure applying means for controlling the amount of material disposed in the container by the next of said increment disposing means.

4. A filling machine comprising a holder for a container, means for moving said holder intermittently to a plurality of stations successively, means at each of a predetermined number of said stations for depositing separate increments of filling material in the container, means at each of a plurality of said stations for applying predetermined pressure to the increments deposited in the container and means operable by one of said pressure applying means for controlling the amount of material disposed in the container by the next of said increment disposing means.

5. A filling machine, comprising a holder for a container, means for advancing said holder intermittently to a plurality of stations successively, means movable axially of and into each holder at one of said stations for detecting the presence or absence of a container in the holder at one of said stations, and means at another of said stations for depositing filling material in the container.

6. A filling machine, comprising a holder for a container, means for advancing said holder intermittently to a plurality of stations successively, means movable axially of and into each holder at one of said stations for detecting the presence or absence of a container in the holder at one of said stations, means at another of said stations for depositing filling material in the container, and means at another of said stations for applying predetermined pressure against the material deposited in the container.

7. A filling machine, comprising a holder for a container, means for advancing said holder intermittently to a plurality of stations successively, means movable axially of and into each holder at one of said stations for detecting the presence or absence of a container in the holder at one of said stations, and means at each of a plurality of said stations for depositing separate increments of filling materials in the container successively.

8. A filling machine, comprising a holder for a container, means for advancing said holder intermittently to a plurality of stations successively, means movable axially of and into each holder at one of said stations for detecting the presence or absence of a container in the holder at one of said stations, means at each of a plurality of said stations for depositing separate increments of filling materials in the container successively, and means at each of a plurality of said stations for applying pressure to the deposited increments.

9. A filling machine, comprising a holder for a container, means for advancing said holder intermittently to a plurality of stations successively, means at each of a plurality of said stations for depositing separate increments of filling materials in the container successively, means at each of a plurality of said stations for applying initial pressure to the deposited increments, and means operable by a predetermined increase in said pressure for releasing said pressure.

10. A filling machine, comprising a holder for a container, means for advancing said holder intermittently to a plurality of stations successively, means at each of a plurality of said stations for depositing separate increments of filling materials in the container successively, means at each of a plurality of said stations for applying initial pressure to the deposited increments, means operable by a predetermined increase in said pressure for releasing said pressure, and means responsive to the release of said pressure for effecting said advancing of said holder.

11. A filling machine, comprising a common support for a plurality of containers, means for advancing said support intermittently for positioning said containers simultaneously at a plurality of stations respectively, a plurality of independently reciprocating plungers respectively located at a plurality of said stations for movement into and out of the containers respectively positioned at said stations, and means responsive to the separate outward movement of said plungers to container clearing positions collectively for effecting said advancing of said common support.

12. A filling machine, comprising a common support for a plurality of containers, means for advancing said support intermittently to position said containers at a plurality of stations respectively, a separate independently reciprocable plunger at one of said stations for detecting the presence or absence of a container in the holder at one of said stations, a separate independently reciprocable plunger at each of a plurality of said stations for applying pressure to increments of filling material deposited in said containers, and means operable by the separate independent movements of said plungers collectively to a container clearing position for effecting said advancing of said support.

13. A filling machine, comprising a common support for a plurality of containers, means for advancing said support intermittently to position said containers at a plurality of stations respectively, a separate independently reciprocable plunger at one of said stations for detecting the presence or absence of a container in the support at one of said stations, means at each of a plurality of said stations for depositing separate increments of filling materials in the containers successively, a separate independently reciprocable plunger at each of a plurality of said stations for applying pressure to the deposited increments, and means operable by the separate independent movements of said plungers collectively to a container clearing position for effecting said advancing of said support.

14. A filling machine, comprising a common support for a plurality of containers, means for advancing said support intermittently to position said containers at a plurality of stations respectively, a separate independently reciprocable plunger at one of said stations for detecting the presence or absence of a container in the support at one of said stations, means at each of a plurality of said stations for depositing separate increments of filling materials in the containers successively, a separate independently reciprocable plunger at each of a plurality of said stations for applying pressure to the deposited increments, means operable by the separate independent movements of said plungers collectively to a container clearing position for effecting said advancing of said support, and means responsive to the completion of a support advancing movement of said advancing means for effecting reversing movement of said plungers to enter the containers repositioned at said stations respectively.

15. A filling machine, comprising a common support for a plurality of containers, means for advancing said support intermittently to position said containers at a plurality of stations respec-

tively, means at each of a plurality of said stations for depositing separate increments of filling materials in said containers successively, a reversible plunger at each of a plurality of said stations for applying pressure to the deposited increments, pressure fluid means for operating each of said plungers independently, means operable by a collectively built up excess pressure of said fluid in moving said plungers independently in the pressure applying direction for reversing said plungers, and means responsive to said reversing movement of said plungers collectively to container clearing positions for effecting said advancing of said support.

16. A filling machine comprising a holder for a container, means for moving said holder intermittently to a plurality of stations successively, means at each of a predetermined number of said stations for depositing separate increments of filling material in the container, means at each of a plurality of said stations for applying predetermined pressure to the increments deposited in the container, means at one of said pressure stations for determining the extent of the compressed increments in the container, and means at the next depositing station for governing the amount of filling material deposited in the container to bring the contents of the container to a predetermined level therein as required by said determining means at the previous pressure station.

17. A filling machine, comprising a carrier for a container, said carrier embodying a chuck structure including a plurality of container-embracing elements one of which is relatively fixed while others are movable laterally with respect to the longitudinal axis thereof, means for so moving said chuck elements to grip the exterior of a container and to release said container for removal from said carrier, and funnel means on said carrier and forming part of the relatively fixed element of the chuck for directing filling material into said gripped container.

18. A filling machine, comprising a carrier for a container, said carrier embodying a chuck and funnel element, said chuck including a plurality of relatively movable container embracing members, a funnel carried by one of said embracing members above said chuck, a resilient split band encircling said embracing members and attached intermediate its ends to said funnel-carrying member, and means for drawing said ends together to move said chuck members laterally toward the longitudinal axis of the chuck to embrace a container therein.

19. A filling machine, comprising a carrier for a container, said carrier embodying a chuck and funnel element, said chuck including a plurality of relatively movable container embracing members, a funnel carried by one of said embracing members above said chuck, a resilient split band encircling said embracing members and attached intermediate its ends to said funnel-carrying member, means for drawing said ends together to move said chuck members laterally toward the longitudinal axis of the chuck to embrace a container therein, and trunnions pivotally connecting said chuck and funnel element to said carrier adjacent the upper end thereof for swinging the lower end of said element into and out of said carrier for changing containers in said element.

20. A filling machine comprising a carrier for a container, a collapsible means movable axially through said carrier for detecting the presence or absence of a container and contents in said carrier, and means responsive to variations in said collapsible element during said axial movement for controlling subsequent operation of the machine.

21. A filling machine, comprising a carrier for a container, a multi-part axially telescoping plunger operable longitudinally to detect presence or absence of a container in the carrier, a lever pivoted at relatively spaced points to two relatively movable parts of said plunger and movable to different angular positions relative to the axis of said plunger by relative movement between said telescoping plunger parts, and means operable by said lever in one of its angular positions for controlling subsequent operation of the machine.

22. A filling machine, comprising a carrier for a container, a plunger movable longitudinally to detect presence or absence of a container in the carrier and to detect presence of matter in the container, a piston connected to said plunger, a cylinder in which said piston reciprocates, a head in the cylinder at one side of the piston between which and said piston fluid under pressure is admitted to move the piston in one direction relative to said head, and means for controlling subsequent operation of the machine operable by movement of said head in the opposite direction relative to said piston by said admitted fluid upon stoppage of said piston through matter in the container prior to completion of a normal stroke of the piston in the first said direction within the cylinder.

23. A filling machine, comprising a carrier for a container, a plunger movable longitudinally to detect presence or absence of a container in the carrier and to detect presence of matter in the container, a piston connected to said plunger, a cylinder in which said piston reciprocates, a head in the cylinder at one side of the piston between which and said piston fluid under pressure is admitted to move the piston in one direction relative to said head, means supporting said cylinder for bodily axial movement to afford said opposite directional movement of said head relative to said piston, and means for controlling subsequent operation of the machine operable by movement of said head in the opposite direction relative to said piston by said admitted fluid upon stoppage of said piston through matter in the container prior to completion of a normal stroke of the piston in the first said direction within the cylinder.

24. A filling machine, comprising a carrier for a container, a plunger movable longitudinally to detect presence of a container in the carrier and to detect the presence of matter in the container, a piston axially aligned with and operably connected to said plunger, a cylinder in which said piston reciprocates, a head in said cylinder between which and said piston fluid under pressure is admitted to move the piston and plunger in one direction relative to said head, means slidably supporting one end of the cylinder for axial movement in the opposite direction by said admitted fluid upon stoppage of said plunger by matter in said container, a valve operable by said cylinder moving in said opposite direction, resilient means holding said valve to resist said movement by said cylinder, a lever pivotally connected at one of its ends to the opposite end of said cylinder and operatively connected at its opposite end to said valve for effecting said operation of said valve and for guiding said cylinder in its said movement,

and means pivotally supporting said lever intermediate its said ends.

25. A machine for filling containers, comprising a hopper, a roll rotatable about a horizontal axis in said hopper for conveying filling material over the upper portion of its periphery to a discharge opening in the hopper, a gate spaced vertically from said upper portion of the periphery of said roll for measuring the depth of the material conveyed from the hopper by said roll, a plunger movable longitudinally into an open end of said container prior to delivery of material thereinto by said roll for determining the depth of vacant space in the container with respect to the plane of said open end of the container, and means controlled by the extent of movement of said plunger into said container for regulating the amount of material subsequently delivered into the container by said roll to fill said container to a predetermined extent relative to said plane.

26. A machine for filling containers, comprising a hopper, a roll rotatable about a horizontal axis in said hopper for conveying filling material over the upper portion of its periphery to a discharge opening in the hopper, a gate spaced vertically from said upper portion of the periphery of said roll for measuring the depth of the material conveyed from the hopper by said roll, a plunger movable longitudinally into an open end of said container prior to delivery of material thereinto by said roll for determining the depth of vacant space in the container with respect to the plane of said open end of the container, a bell-crank lever pivoted adjacent said hopper, means connecting one arm of said lever to said gate, a second arm on said bell-crank lever, and cam and follower means carried by said plunger and said second arm for vertically moving said gate in accordance with the longitudinal movement of said plunger into said container.

27. A machine for filling containers, comprising a hopper, a roll rotatable about a horizontal axis in said hopper for conveying filling material over the upper portion of its periphery to a discharge opening in the hopper, a gate spaced vertically from said upper portion of the periphery of said roll for measuring the depth of the material conveyed from the hopper by said roll, a plunger movable longitudinally into an open end of said container prior to delivery of material thereinto by said roll for determining the depth of vacant space in the container with respect to the plane of said open end of the container, a bell-crank lever pivoted adjacent said hopper, means connecting one arm of said lever to said gate, a second arm on said bell-crank lever, cam and follower means carried by said plunger and said second arm for vertically moving said gate in accordance with the longitudinal movement of said plunger into said container, means for retaining said gate in the position to which it is moved by said plunger during rotation of said roll to deliver the required amount of material into the container, and means for returning said gate to a normal position relative to said roll subsequent to said delivery.

28. A machine for filling containers, comprising a hopper, a roll rotatable about a horizontal axis in said hopper for conveying filling material over the upper portion of its periphery to a discharge opening in the hopper, a gate spaced vertically from said upper portion of the periphery of said roll for measuring the depth of the material conveyed from the hopper by said roll, a plunger movable longitudinally into an open end of said container prior to delivery of material thereinto by said roll for determining the depth of vacant space in the container with respect to the plane of said open end of the container, a bell-crank lever pivoted adjacent said hopper, means connecting one arm of said lever to said gate, a second arm on said bell-crank lever, cam and follower means carried by said plunger and said second arm for vertically moving said gate in accordance with the longitudinal movement of said plunger into said container, a lever engaging said second arm to retain said bell-crank lever in the position to which it is moved by said cam and follower means, and means for subsequently releasing said retaining lever.

29. A filling machine comprising a carrier for a container, movable intermittently to a plurality of stations successively, means for depositing increments of filling material at each of a plurality of stations respectively, means for compacting said increments in the container at a plurality of alternate stations respectively, means at one of said filling stations for varying the volume of filling material deposited in the container, and means controlled by the compacting means at the next preceding station for effecting said volume varying.

30. A filling machine comprising a carrier for a container, movable intermittently to a plurality of stations successively, means for depositing increments of filling material at each of a plurality of stations respectively, means for compacting said increments in the container at a plurality of alternate stations respectively, means at one of said filling stations for varying the volume of filling material deposited in the container, and means at the next preceding compacting station for determining accrued deficiency in the increments deposited at previous filling stations and for setting said volume varying to compensate for such deficiency.

31. A filling machine comprising a carrier for a container, movable intermittently to a plurality of stations successively, means for depositing increments of filling material at each of a plurality of stations respectively, means for compacting said increments in the container at a plurality of alternate stations respectively, means at one of said filling stations for varying the volume of filling material deposited in the container, means at the next preceding compacting station for determining accrued deficiency in the increments deposited at previous filling stations and for setting said volume varying means to compensate for such deficiency, and means for effecting said filling at said succeeding station according to said setting.

32. A filling machine comprising a carrier for a container, movable intermittently to a plurality of stations successively, means for depositing increments of filling material at each of a plurality of stations respectively, means for compacting said increments in the container at a plurality of alternate stations respectively, means at one of said filling stations for varying the volume of filling material deposited in the container, means at the next preceding compacting station for determining accrued deficiency in the increments deposited at previous filling stations and for setting said volume varying means to compensate for such deficiency, means for effecting said filling at said succeeding station according to said setting, and means

at said succeeding station for releasing said setting means.

33. A filling machine comprising a carrier for a plurality of containers, movable to bring each container to a plurality of stations successively, a device at each of a plurality of predetermined stations for depositing increments of filling material in the respective containers, each depositing device comprising a uni-directional clutch including a reversible drive element, a common actuator for operating said drive elements in one direction, and yieldable means opposing said positive movement and effecting movement of said drive elements in the opposite direction upon reversal of said common actuator.

34. A filling machine comprising a rotary carrier for a plurality of containers, means for turning said carrier to align said containers with angularly spaced stations successively, a ram at each of a plurality of said stations movable vertically into and out of respectively aligned containers, a shoulder on each ram, a bell-crank lever rockable in a radial plane adjacent each ram with one arm engageable by the ram shoulder and a second arm vertically disposed, a flexible element encircling said second arms, a drum attached to said element, means for turning the drum to rock said levers in one direction as the rams move into the containers, said shoulders rocking said levers in the opposite direction as the rams move out of said containers, and means controlled by resulting rotation of said drum for effecting movement of said carrier when all of said rams attain maximum position of withdrawal from said containers.

35. A filling machine comprising a rotary carrier for a plurality of containers, means for turning said carrier to align said containers with angularly spaced stations successively, a ram at each of a plurality of said stations movable vertically into and out of respectively aligned containers, a shoulder on each ram, a bell-crank lever rockable in a radial plane adjacent each ram with one arm engageable by the ram shoulder and a second arm vertically disposed, a flexible element encircling said second arms, a drum attached to said element, means for turning the drum to rock said levers in one direction as the rams move into the containers, said shoulders rocking said levers in the opposite direction as the rams move out of said containers, a shaft carrying said drum, a lever loosely mounted on said shaft, an element secured to said shaft, means releasably connecting said lever and said element to afford angular adjustment of the lever about the shaft, and a push rod engageable by said lever for effecting station changing rotation of said carrier.

36. A filling machine, comprising a carrier for a plurality of containers at angularly spaced stations, hydraulically operated means at predetermined stations for entering and leaving said containers, hydraulically operated means for moving said carrier from station to station, a hydraulic piping circuit supplying pressure fluid to said hydraulically operated means including a control valve for and normally set to allow actuation of said carrier moving means, and means associated with one of said container entering means for actuating said control valve to by-pass said fluid from said carrier moving means under predetermined conditions encountered by said one container entering means.

37. A filling machine, comprising a carrier for a plurality of containers at angularly spaced stations, hydraulically operated means at predetermined stations for entering and leaving said containers, hydraulically operated means for moving said carrier from station to station, a hydraulic piping circuit supplying pressure fluid to said hydraulically operated means including a control valve for carrier moving means, and means asociated with each of said entering means and operable as a series-unit to pass fluid to said carrier moving means when all of said entering means are totally withdrawn from said containers.

38. A filling machine, comprising a carrier for a plurality of containers at angularly spaced stations, hydraulically operated means at predetermined stations for entering and leaving said containers, hydraulically operated means for moving said carrier from station to station, a hydraulic piping circuit supplying pressure fluid to said hydraulically operated means including one control valve for and normally set to allow pressure fluid to flow to said carrier moving means, a second control valve in series with said first said valve in said circuit and normally set to disallow said flow while any of said container entering means remains within a container, means at one station for operating the first said valve to interrupt said flow under abnormal conditions encountered by the container entering means at said one station, and means at a plurality of said stations for collectively operating said second valve to allow said flow under normal conditions encountered by the container entering means at said plurality of stations.

WALTER W. SIBSON, JR.
HAROLD H. BELCHER.