No. 833,287. PATENTED OCT. 16, 1906.

J. ALEXANDER.

TYPE WRITER RIBBON OPERATING MECHANISM.

APPLICATION FILED SEPT. 11, 1903. RENEWED OCT. 12, 1905.

2 SHEETS—SHEET 1.

Fig. 1.

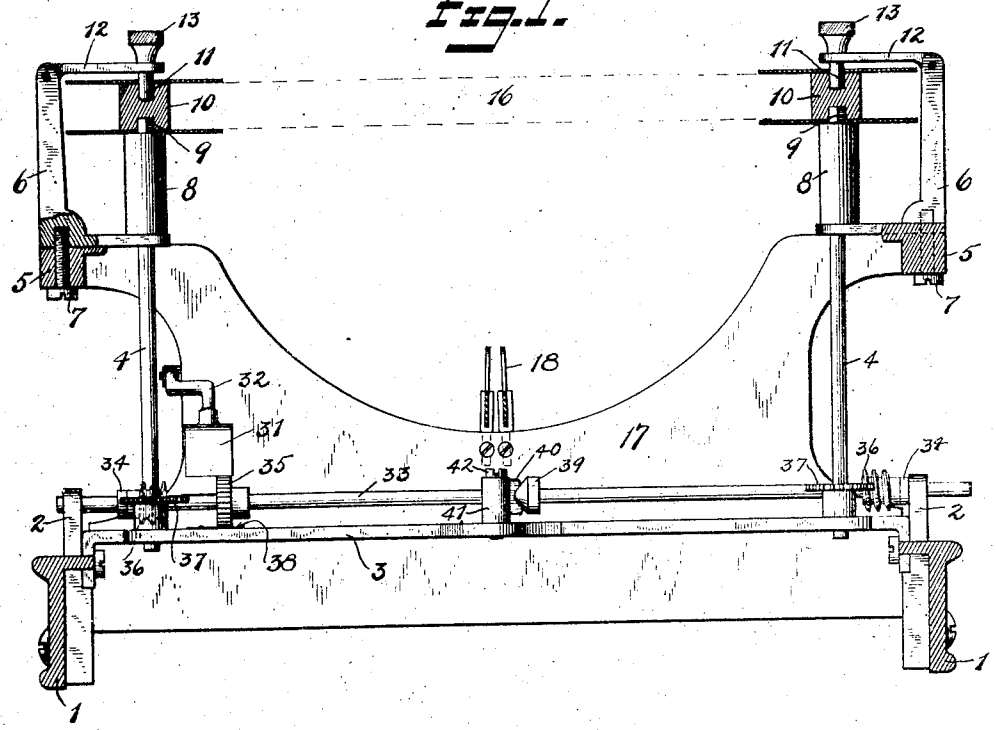

Fig. 2.

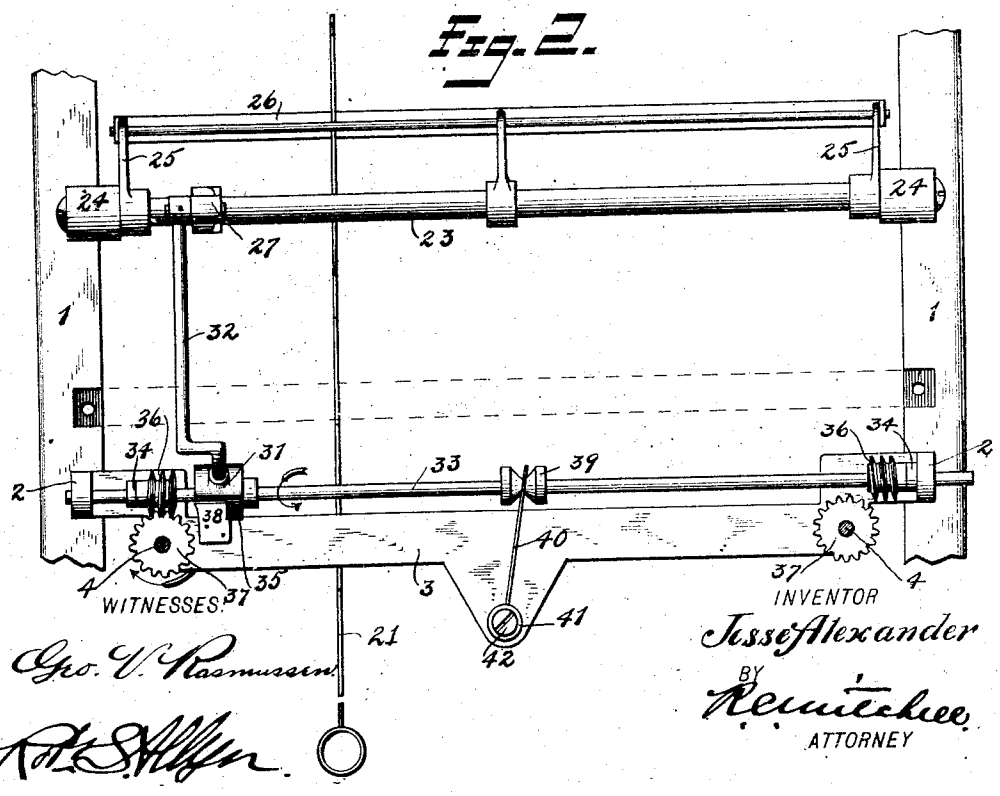

WITNESSES:

Geo. V. Rasmussen

R. S. Allyn

INVENTOR

Jesse Alexander

BY

R. C. Mitchell

ATTORNEY

No. 833,287. PATENTED OCT. 16, 1906.

J. ALEXANDER.

TYPE WRITER RIBBON OPERATING MECHANISM.

APPLICATION FILED SEPT. 11, 1903. RENEWED OCT. 12, 1905.

2 SHEETS—SHEET 2.

Fig. 3.

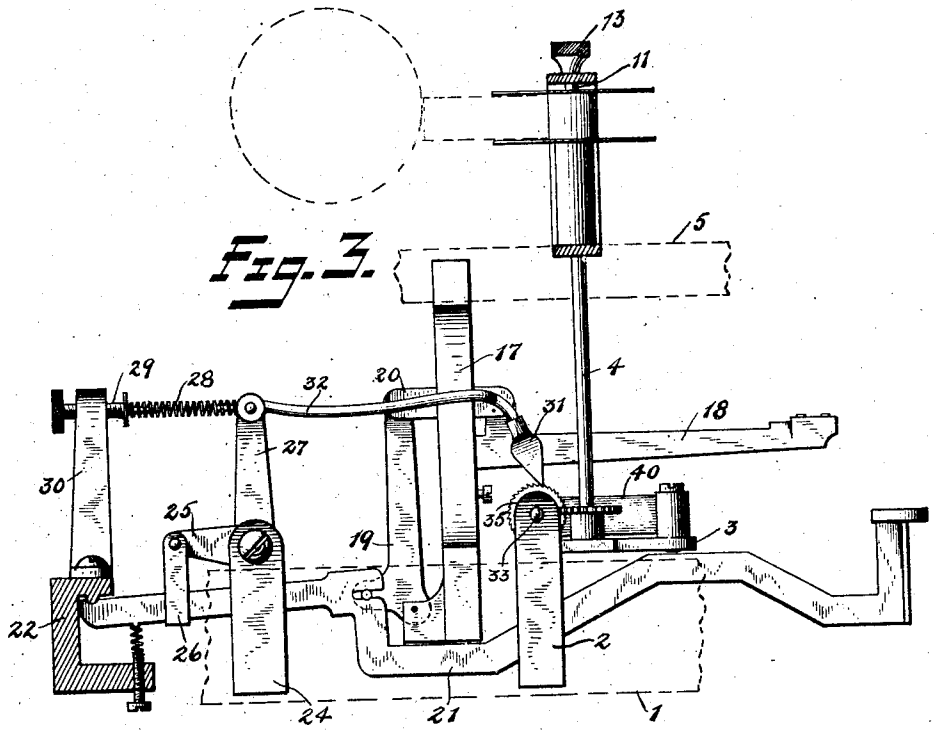

Fig. 4.

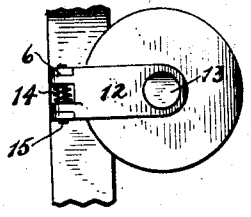

Fig. 5.

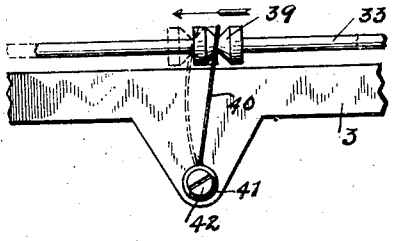

WITNESSES:

Geo. V. Rasmussen

R. S. Allyn.

INVENTOR

Jesse Alexander

BY

R. Cunliffe

ATTORNEY

UNITED STATES PATENT OFFICE.

JESSE ALEXANDER, OF BROOKLYN, NEW YORK, ASSIGNOR, BY DIRECT AND MESNE ASSIGNMENTS, OF ONE-HALF TO JAMES McDONNELL HUTTON, OF WORTENDYKE, NEW JERSEY, AND ONE-HALF TO LEE ALEXANDER, KITTIE ALEXANDER, JR., JESSE ALEXANDER, JR., AND TYVE ALEXANDER.

TYPE-WRITER-RIBBON-OPERATING MECHANISM.

No. 833,287. Specification of Letters Patent. Patented Oct. 16, 1906.

Application filed September 11, 1903. Renewed October 12, 1905. Serial No. 282,503.

To all whom it may concern:

Be it known that I, JESSE ALEXANDER, a citizen of the United States, residing at Brooklyn, Kings county, New York, have invented certain new and useful Improvements in Type-Writer-Ribbon-Operating Mechanism, of which the following is a full, clear, and exact description.

My invention relates to improvements in type-writers, and particularly to the mechanism for carrying and operating the ribbon.

The machine is of that class known as a "front-strike," which has a ribbon movable from side to side as the type are operated.

I have shown in the drawings and more fully described in the specification improvements in the method of supporting and mounting the ribbon-carrying spools and shafts and in mechanism for reversing the feed of the ribbon, so that it will automatically be wound first on one spool and then rewound on the other.

In the accompanying two sheets of drawings, Figure 1 is a front elevation of parts of a type-writer construction embodying the improvements of this invention. Fig. 2 is a plan view of the mechanism with the upper part of the machine, the ribbon-spools and the adjacent parts removed, the spool-carrying shafts being shown in cross-section and the type-bar plate removed. Fig. 3 is a side elevation of a construction embodying my invention with one key and type-bar, the rear supporting member for the key-levers being shown in cross-section. Fig. 4 is a detail plan view of a ribbon-carrying spool, showing the method of holding it in place. Fig. 5 is a detail plan view of part of the automatic reversing device, showing the reversing-shaft in one position in full lines and in dotted lines in a position intermediate between the right hand and left hand full operative positions.

In the drawings, 1 1 are fragments of the bottom side frames of the machine. 2 2 are supporting-posts which are secured to these frames 1 1 at either side.

3 is a connecting-bar, which is in this particular form shown connected to the supporting-post 2 2.

4 4 are ribbon-operating shafts, which are stepped in recesses and rotatably mounted in the connecting-bar 3 at their lower ends.

5 5 are the upper side frames of the machine. 6 6 are brackets secured by screws 7 7 to these side frames 5 5. The lower arm of each bracket is extended toward the center of the machine and they form journals or bearings for the ribbon-shafts 4 4.

8 8 are collars or enlarged portions of the ribbon-shafts 4 4, which rest upon the lower arms of the brackets. The upper ends of the ribbon-shafts 4 4 are square, as at 9, or may be formed of some other suitable irregular shape, so as to cause the spools 10 10 to rotate therewith. These spools, however, are free to be removed from the ends of the shafts 4 4 as desired.

11 11 are centering-pins, which are carried by the levers 12 12, which latter are pivoted to the upright arms of the brackets 6 6.

13 13 are suitable handles by which the levers 12 12 may be pivotally moved about their supports in the brackets 6 6, so as to withdraw the pins 11 11.

14 is a spring mounted on the pivot 15 of the lever 12, which normally holds the lever, and consequently the pin, in engagement with the ribbon-spool 10. Obviously there must be sufficient play either about the joint 15 or between the pin 11 and the recess in the ribbon-spool 10 to permit of the pin slipping readily into place. The spring 14 holds the parts together.

It will be noted thus far that by removing the screw 7 the bracket 6 and spool-shaft 4 may be lifted off from the machine simultaneously. This applies equally to the other ribbon-shafts. The section on Fig. 1 of the right-hand upper frame 5 is not taken at the point through which the attaching-screw 7 passes, but slightly forward thereof, so as to show the cross-section of the frame 5. This, taken in connection with showing the left-hand screw 7, would indicate that the top of the frame 5 is grooved to support the bracket 6.

16 indicates in dotted lines the ribbon which would be wound from one spool 10 to the other. The automatic winding of the ribbons is effected by the operation of the

key and type-bar mechanism. This consists of type-bar plate 17, to which is pivoted a series of type-bars, as 18, also a series of intermediate levers, as 19, which are connected to the type-bars by means of a series of links, as 20,

21 is a key-lever pivotally carried by the rear support 22, the depression of which raises its type-bar to the printing position.

23 is a universal shaft which is pivoted to the supports 24 24 and has two rearwardly-extending arms 25 25, to which is hung the universal bar 26 This latter stands underneath the series of key-levers and is operated by the depression of any one.

27 is an upright arm carried by the universal shaft 23, which is normally pressed toward the front of the machine by means of the spring 28, having the adjusting-screw 29, operating in the support 30.

31 is a pawl which is preferably weighted and carried by an arm 32, which is pivoted to the upright arm 27 of the universal mechanism.

33 is a feeding-shaft which is rotatably supported in the post 2 2 and also longitudinally movable, its range of movement being limited by the stops 34 and 34.

35 is a ratchet-wheel carried by the shaft 33 and adapted to be engaged by the pawl 31.

36 36 are worm-wheels carried by the shaft 33 at its ends and adapted to coöperate with the worm-gears 37 37, carried by the ribbon-shafts 4 4.

In the position shown in Fig. 2 the left-hand gears are in engagement with one another, and the forward movement of the pawl 31 after it is released by the operation of the key and type-bar mechanism would cause the shaft 33 to rotate in the direction of the arrow, so as to rotate the left-hand ribbon-spool shaft 4, and thus unwind the ribbon from the right-hand spool 10.

38 is a brake in the form of a thin spring-like member which engages the under side of the ratchet 35 to prevent it from rotating backward.

When the feeding-shaft 33 is shifted from the position shown in Fig. 2 to the left, so that the left-hand stop 34 comes against the corresponding post 2, then the right-hand worm-gears will be in engagement with one another and the direction of feed will be reversed, the left and right worm-gears being oppositely threaded. This shifting of the feeding-shaft 33 may be accomplished manually; but I prefer to provide an automatic means. This includes the double-faced yoke 39 and the spring-arm 40, which latter has a hub 41, pivoted at 42 to the connecting-bar 3. The double-faced yoke 39, as shown, has two oppositely-positioned annular faces about which the slotted end of the spring-arm 40 engages. When the parts are in position, as shown in Fig. 2, the ribbon is being wound by the left-hand ribbon-shaft 4. The ends of the ribbon are fastened to their respective winding-spools. When the right-hand end of the ribbon which is secured to the right-hand spool 10 is reached, the operation of the machine continues. The tension of the ribbon will cause sufficient resistance to hold the left-hand shaft 4, with the worm-gear 37, stationary. By reason of this the left-hand worm 36, continuing to revolve instead of acting to rotate the gear 37, will itself move to the left in the manner of a screw turning in a nut. The continued operation of the machine will cause continued movement in the same direction of the worm 36 and consequent shifting of the feeding-shaft 33 to the left. The spring-blade 40 assists the shaft 33, so as to move it completely to the left, and thus disengage the left-hand gears. The accomplishment of this assistance will be more readily understood by an inspection of Fig. 5, in which the shaft 33 is shown in full lines in the right-hand position and in dotted lines in the central position or moved half-way across. Thus it will be seen that at the central position the spring-blade 40 is buckled up, so that the spring is put under tension. The instant that the left-hand worm moves the yoke 39 just beyond the central position the spring-blade 40 will become effective in the opposite direction and jump the shaft 33 suddenly to the left and bring the right-hand worm 36 into engagement with its corresponding gear 37. The operation will then continue, the ribbon being wound upon the right-hand spool and unwound from the left. Reversal will take place in the opposite direction when the ribbon is entirely unwound from the left-hand spool. These parts are all simple in construction and effective in operation with but little likelihood of getting out of order.

What I claim is—

1. A type-writing-ribbon-operating mechanism including a pivoted pawl member, means for operating the same, a feeding-shaft, a ratchet carried by said shaft engaged by said pawl member, a pair of ribbon-operating shafts, worm-wheels carried by said feeding-shaft at its opposite ends, gears carried by said operating-shafts, and a pivoted spring-blade engaging said feeding-shaft said parts being arranged so that the feeding-shaft may be automatically shifted from one side to the other and assisted in its movement beyond the central position by the spring-blade.

2. A type-writing-ribbon-operating mechanism including, a pair of ribbon-operating shafts, bearings therefor, irregular-shaped portions carried by said shaft, ribbon-spools having correspondingly-shaped recesses adapted to be carried by said shafts, and pivoted levers engaging the tops of said spools for holding them in position.

3. A type-writing-ribbon-operating mechanism including, a pair of ribbon-operating shafts, bearings therefor, irregular-shaped portions carried by said shaft, ribbon-spools having correspondingly-shaped recesses adapted to be carried by said shafts, and spring-pressed pivoted levers engaging the tops of said spools for holding them in position.

4. A type-writing-ribbon-operating mechanism including, a pair of ribbon-operating shafts, means for operating the same, ribbon-spools removably carried by said shafts and having recesses in their upper ends and levers having projections engaging in recesses in said spools for removably holding them in position.

5. Mechanism of the character described including ribbon-operating shafts, bearings therefor, spools removably carried by said shafts, a pivoted lever for each of said spools, a pin carried by each of said levers and engaging in recesses in said spools for normally holding them in position.

6. Mechanism of the character described including, a pair of ribbon-operating shafts, a bracket for each of said shafts forming bearings therefor, ribbon-spools carried by said shaft, and retaining means carried by said brackets for engaging said spools, said brackets being formed separately from the other parts of the machine.

7. Mechanism of the character described including a type-writer frame, a bracket removably carried by said frame, a ribbon-operating shaft having a bearing in said bracket, a ribbon-spool carried by said shaft, a lever pivoted to said bracket for holding the said spool in place on the shaft.

8. Mechanism of the character described including an L-shaped bracket having a horizontal arm and an upright arm, a ribbon-operating shaft mounted in the horizontal arm and having a shoulder resting thereon, a ribbon-spool removably carried by said operating-shaft but rotatable therewith and having a recess in its upper end, a lever pivoted to the upright arm of said bracket and having a pin engaging in the recess in said spool for holding it in position.

9. Mechanism of the character described including an L-shaped bracket having a horizontal arm and an upright arm, a ribbon-operating shaft mounted in the horizontal arm and having a shoulder resting thereon, a ribbon-spool removably carried by said operating-shaft but rotatable therewith and having a recess in its upper end, a spring-pressed lever carried by the upright arm of said bracket and having a pin engaging in the recess in said spool for holding it in position.

10. A type-writer-ribbon-carrying mechanism, comprising a vertical shaft, a ribbon-spool removably carried thereby, and a spring-pressed arm pivoted on a horizontal axis and normally holding the spool in place on said shaft but adapted to be disengaged therefrom to permit the removal of said spool.

JESSE ALEXANDER.

Witnesses:
ROBT. S. ALLYN,
L. VREELAND.