United States Patent [19]

Nagele

[11] **Des. 259,787**

[45] ** **Jul. 7, 1981**

[54] **VEHICULAR TWO-WAY RADIO OR SIMILAR ARTICLE**

[75] Inventor: **Albert L. Nagele,** Wilmette, Ill.

[73] Assignee: **Motorola, Inc.,** Schaumburg, Ill.

[**] Term: **14 Years**

[21] Appl. No.: **21,525**

[22] Filed: **Mar. 19, 1979**

[51] **Int. Cl.** ..... **D14—03**
[52] **U.S. Cl.** **D14/68;** D14/7
[58] **Field of Search** D14/1, 5-7, D14/68, 70-76, 96, 99

[56] **References Cited**

U.S. PATENT DOCUMENTS

D. 221,555	8/1971	Krolopp	D14/68
D. 250,710	1/1979	Yasuoka	D14/7
D. 251,730	5/1979	Root et al.	D17/7 X

OTHER PUBLICATIONS

Home Furnishings Daily, 5-30-73, p. 14, Hitachi Receiver.

Primary Examiner—Jane E. Corrigan
Attorney, Agent, or Firm—Rolland R. Hackbart; James W. Gillman

[57] **CLAIM**

The ornamental design for a vehicular two-way radio or similar article, substantially as shown and described.

DESCRIPTION

FIG. **1** is a front, top and left side perspective view of a vehicular two-way radio or similar article showing my new design.
FIG. **2** is a right side elevational view thereof;
FIG. **3** is a rear elevational view thereof; and
FIG. **4** is a bottom plan view thereof.

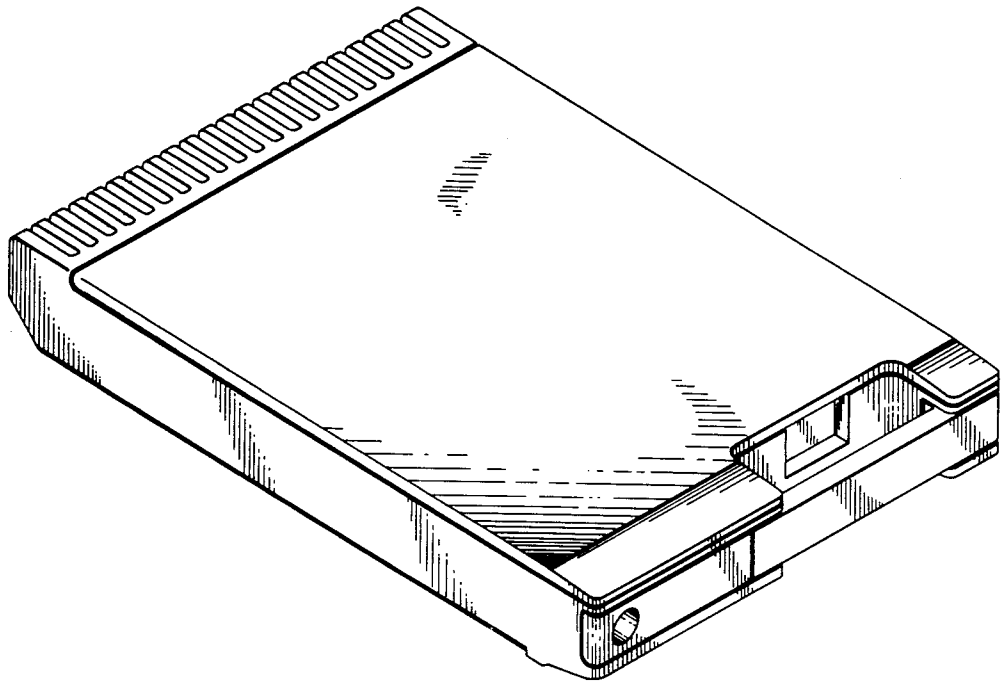

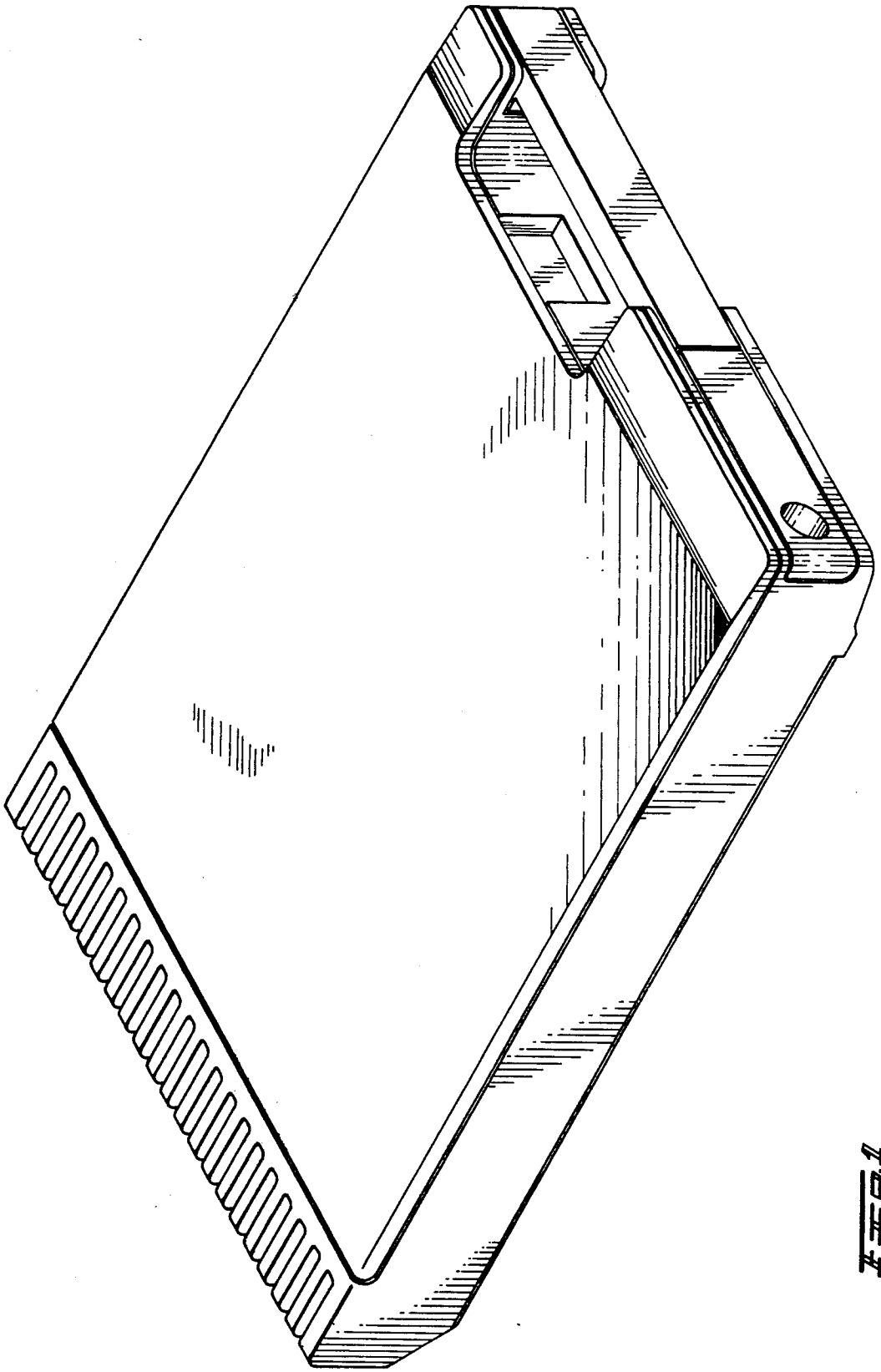

FIG. 1

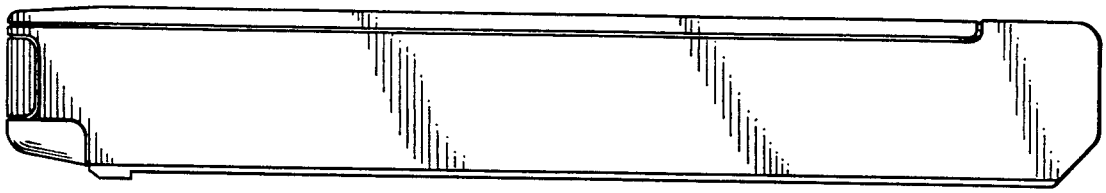

Fig. 2

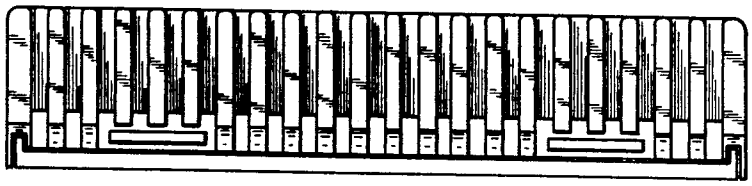

Fig. 3

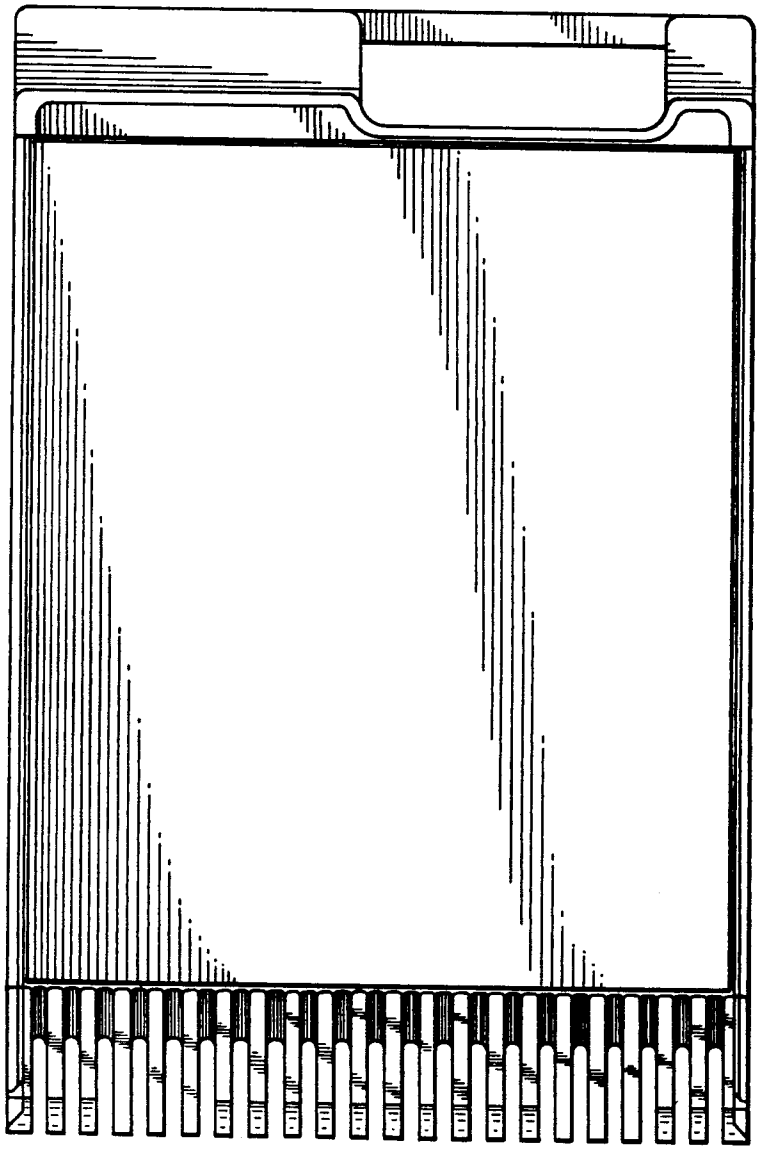

Fig. 4