Nov. 10, 1964 H. SNYDER ETAL 3,156,396

WEB GUIDING MEANS

Filed Oct. 8, 1962 3 Sheets-Sheet 1

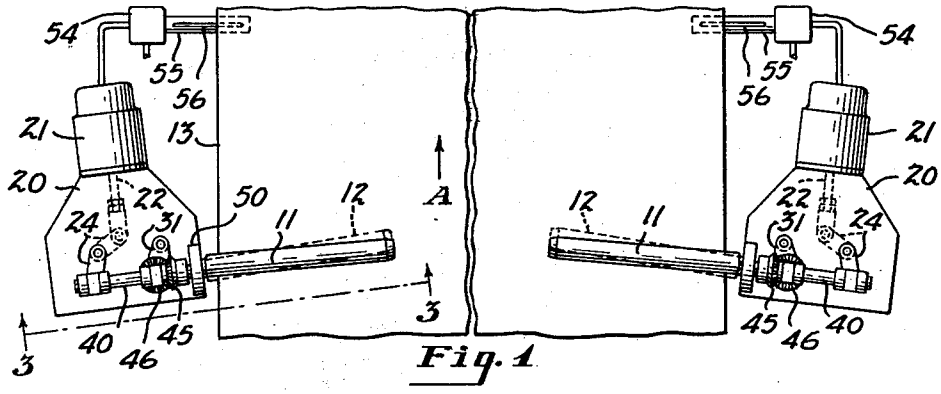

Fig. 1

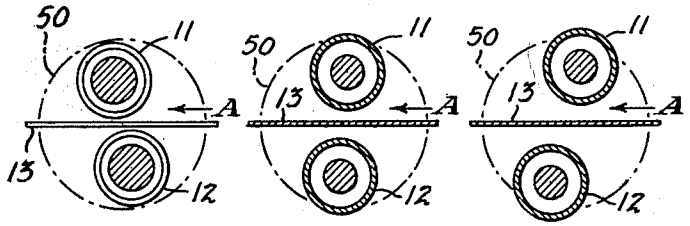

Fig. 4 Fig. 5 Fig. 6

Fig. 2

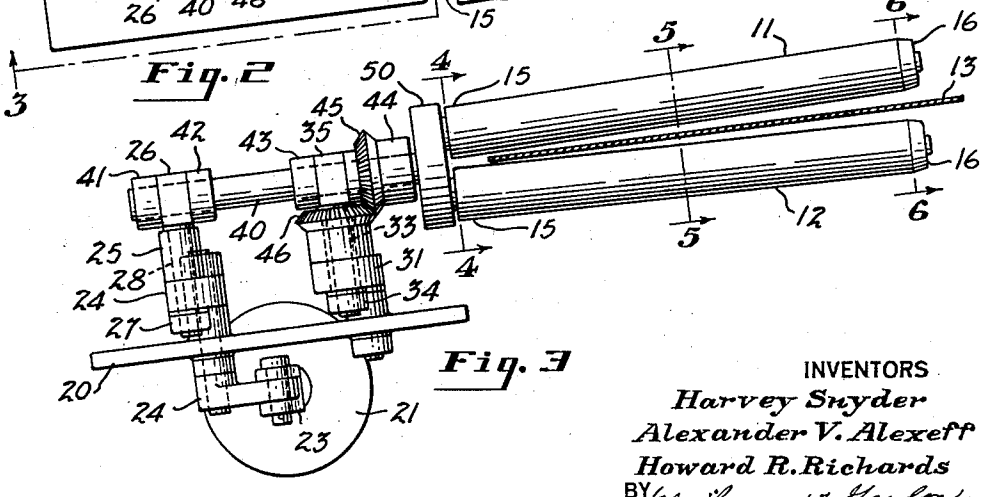

Fig. 3

INVENTORS
Harvey Snyder
Alexander V. Alexeff
Howard R. Richards
BY Ely, Pearne & Gordon
ATTORNEYS

Nov. 10, 1964 H. SNYDER ETAL 3,156,396

WEB GUIDING MEANS

Filed Oct. 8, 1962 3 Sheets-Sheet 2

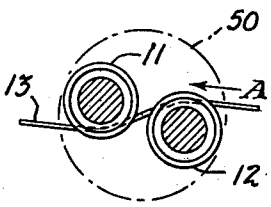

Fig. 9

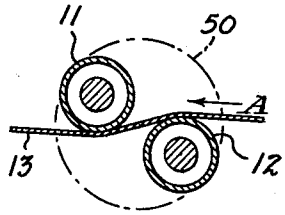

Fig. 10

Fig. 7

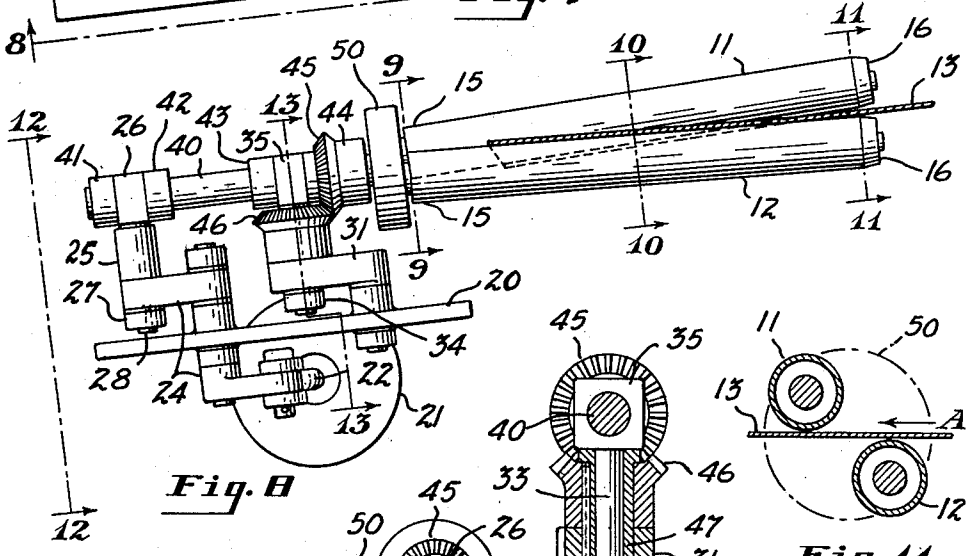

Fig. 8

Fig. 13

Fig. 11

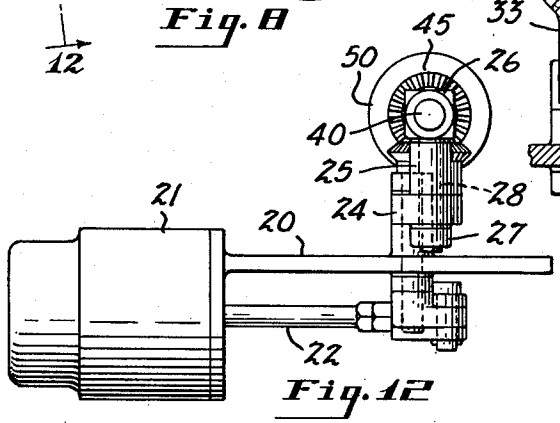

Fig. 12

INVENTORS
Harvey Snyder
Alexander V. Alexeff
Howard R. Richards
BY Eby, Laine & Gordon
ATTORNEYS

Nov. 10, 1964 H. SNYDER ETAL 3,156,396

WEB GUIDING MEANS

Filed Oct. 8, 1962 3 Sheets-Sheet 3

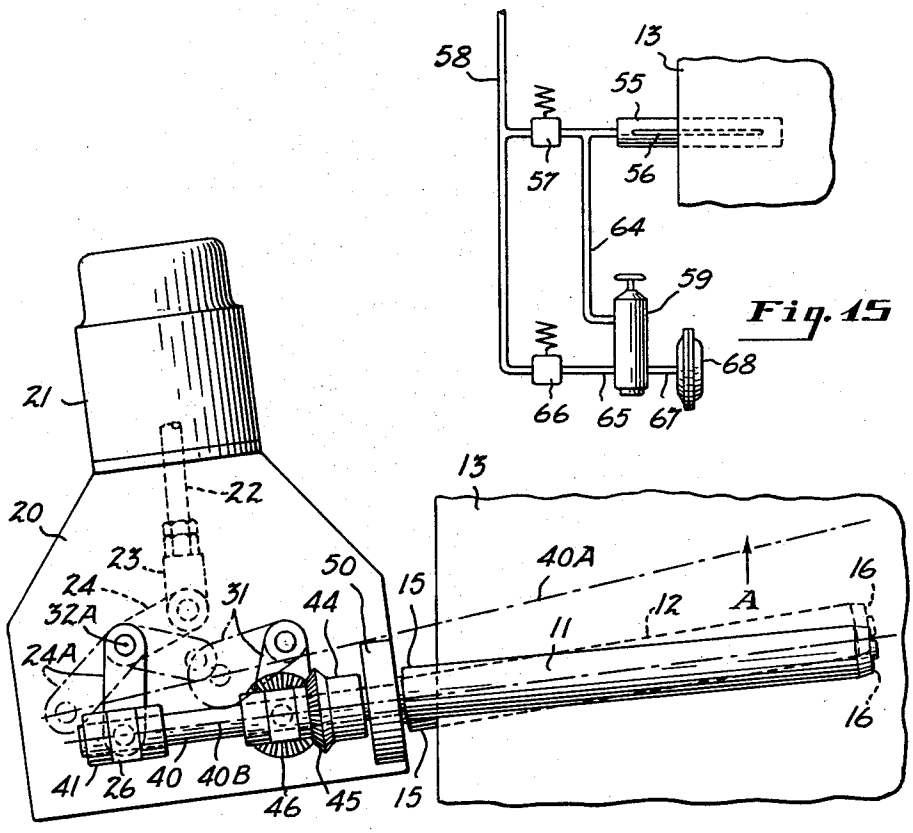

Fig. 15

Fig. 14

INVENTORS
Harvey Snyder
Alexander V. Alexeff
Howard R. Richards
BY Eby, Farmer & Gordon
ATTORNEYS

United States Patent Office 3,156,396 Patented Nov. 10, 1964

3,156,396

WEB GUIDING MEANS

Harvey Snyder and Alexander V. Alexeff, Cleveland, and Howard R. Richards, Lakewood, Ohio, assignors to Industrial Ovens, Incorporated, Cleveland, Ohio, a corporation of Ohio

Filed Oct. 8, 1962, Ser. No. 228,943
4 Claims. (Cl. 226—17)

This invention relates to apparatus for guiding and centering traveling webs of paper, fabric, film, metal and the like.

The invention provides for oscillatably moving an associated pair of rolls back and forth around an imaginary axis extending transversely to a guided web, the back and forth movement being to conditions of orientation of the rolls more particularly described in the following specification and the rolls being mounted for such oscillatory movement with one end of each roll leading or trailing the other in the relationships more fully set forth below.

These arrangements accomplish, in a novel and simplified manner, the controlled and continuing adjustment of the angular spacing of the planar projections of the rolls and also the simultaneous controlled and continuing adjustment of the rolls to different degrees of profile interference. The planar projections of the rolls referred to are those in a plane transverse to the path of web travel. In another important aspect controlled and continuing adjustment of the lateral position of the rolls may also be provided for. Moreover, controlled and continuing adjustment of the rolls' degree of angular displacement from a normal-to-web-path attitude may be simultaneously accomplished.

Examples of the invention are illustrated in the accompanying drawings, in which:

FIGURE 1 is a fragmentary plan view of web guiding apparatus embodying the invention in association with a guided web.

FIGURE 2 is an enlarged view of the left-hand portion of FIGURE 1.

FIGURE 3 is an elevation taken from the plane of line 3—3 in FIGURES 1 and 2.

FIGURES 4, 5, and 6 are cross-sections taken from the planes of lines 4—4, 5—5, and 6—6, respectively, in FIGURE 3.

FIGURE 7 is a view similar to FIGURE 2 showing the parts in an alternative position.

FIGURE 8 is a view taken from the plane of line 8—8 in FIGURE 7.

FIGURES 9, 10, and 11 are cross-sections taken from the planes of lines 9—9, 10—10, and 11—11, respectively, in FIGURE 8.

FIGURE 12 is an elevation taken from the plane of line 12—12 in FIGURE 8.

FIGURE 13 is a cross-sectional elevational taken from the plane of line 13—13 in FIGURE 8.

FIGURE 14 is a view similar to FIGURES 2 and 7 but showing a slightly modified form of apparatus.

FIGURE 15 is a schematic view of control means which may be employed in the invention.

As shown in the drawings, there are provided first and second rolls 11 and 12. The rolls are in guiding relationship with respect to a passing web 13, which is moving in the direction indicated by the arrow A in the various views. The roll 11 extends over the web 13 and the roll 12 extends under the web 13.

Mounted in association with the fixed base 20 is a spring-loaded diaphragm actuator 21, having an actuating rod 22 (FIGURES 2 and 7). The actuator is permitted to be normally extended in the postion shown in FIGURES 1 and 2. At the end of the actuating rod

is a yoke 23 which couples through a bellcrank linkage 24 to an upright shaft 28 received in a spacer sleeve member 25 (FIGURES 3, 8, 12) having a pivot block bearing 26 fixed at its upper end. The shaft 28 is rotatably pinned to the bellcrank 24 by a set collar 27.

Also mounted on the base 20 is a crank 31 pivoted at the pivot point 37 (see FIGURE 2). At its other end the crank 31 rotatably carries an upright shaft 33 which is pinned in retained position by a set collar 34. A pivot block bearing 35 is fixed to the upper end of the shaft 33. The output of the bellcrank 24 and the crank 31 constitutes a parallelogram linkage, with the pivot blocks 26 and 35 rotatably (oscillatably) receiving a shaft 40. A shaft 40 is retained in position by the pinned set collars 41–44. Fixed to the set collar 44 is a bevel gear 45 which meshes with a bevel gear 46 keyed to the bearing sleeve 47 (FIGURE 13) which is in turn keyed to the crank 31. Accordingly, as the crank 31 moves angularly, the bevel gear 46 moves through a corresponding angular distance which in turn drives the bevel gear 45 and the shaft 40 through corresponding angular distances.

Carried on the shaft 40 is a mounting member 50 to which are mounted the rolls 11 and 12. As shown in the drawings, centerlines of the rolls are not parallel to each other or to the centerline of the shaft 40.

When the rolls move from the condition shown in FIGURES 2 and 3 toward the condition shown in FIGURES 7 and 8, they move from a condition where there is an over-and-under relationship between the rolls 11 and 12 as shown in FIGURES 2 and 3 toward a condition where there is a side-by-side relationship between the rolls 11 and 12 as shown in FIGURES 7 and 8. When the linkage moves in the opposite direction, the rolls then shift back away from the condition shown in FIGURES 7 and 8 and toward the condition shown in FIGURES 2 and 3. The non-parallel mounting of the rolls is such that the fixed end 15 of each roll angularly leads the free end 16 of each roll as the rolls move from the condition shown in FIGURES 2 and 3 to that shown in FIGURES 7 and 8. Conversely, the free end 16 of each roll angularly leads the fixed end 15 of each roll as the rolls move from the condition shown in FIGURES 7 and 8 to that shown in FIGURES 2 and 3.

Due to the bodily shifting of the pivot blocks 26 and 35 upon actuation of the cranks 24 and 31, the rolls are partially withdrawn from the web 13 as they move from the first condition shown in FIGURES 2 and 3 toward the second condition shown in FIGURES 7 and 8. Conversely, they are advanced back onto the web as the rolls move from the second condition back to the first condition.

If desired, the linkage can be modified in a simple manner to provide for increasing and decreasing the degree of angular displacement of the rolls 11 and 12 from a normal-to-web-path attitude as the rolls move back and forth between the first and second conditions. This can be done for example by moving the pivot point 32 (FIGURE 2) further away from the shaft 40 as shown at 32A (FIGURE 14) and thereby extending the top arm of crank 24 (FIGURE 2) as shown at 24A (FIGURE 14). The linkage provided by the cranks 24A and 31 is no longer a parallelogram linkage and the distortion of the mechanical movement is such as to establish a centerline 40A (FIGURE 14) for the axis of the shaft 40 when the linkage and rolls are in the second or retracted condition. Since this angular displacement of the centerline 40A from the normal-to-web-path attitude is greater than the angular displacement of the centerline 40B of the shaft 40 in its extended position, it will be understood that the assembly of rolls 11 and 12, taken

together as a set of rolls, are increased in their angular displacement from a normal-to-web-path attitude as the linkage moves from the first condition to the second condition, and are correspondingly decreased as the linkage moves back toward the first condition. In the above discussion, the term "normal" as used in the expression "normal-to-web-path attitude" has reference to a relationship of perpendicularity to the centerline of the traveling web or, equivalently, a relationship of perpendicularity to any line or plane parallel to such centerline of the traveling web.

The apparatus as described above may be duplicated with mirror-image symmetry at the opposite edge of the web as illustrated in FIGURE 1, so that each edge of the web is independently guided and the apparatus at each edge of the web accomplishes the various movements and functions as described above.

As shown in FIGURE 1, a senser unit is provided in the vicinity of the guiding apparatus at each side of the web and is operatively associated with the guiding apparatus at the same side of the web through the control means (including the diaphragm of the actuator 21) schematically illustrated in FIGURE 15. Many components of such control means may be positioned within the housing 54 schematically indicated in FIGURE 1. The edge sensing unit may comprise a tube 55 having a slot 56 and supplied with low-pressure air through a spring-loaded regulator 57 which reduces the pressure of air supplied in the line 58 to say about 5 p.s.i. The static pressure on the tube 55 is imposed on the input side of a pressure multiplier 59 through line 64. Operating air is supplied by the pressure multiplier through line 65 from the air supply line 58 at a suitably elevated pressure established by the spring-loaded pressure regulator 66. The output line 67 varies in pressure in a well known manner according to the input pressure signal through line 64 to thereby actuate the schematically shown diaphragm 68 of the spring-loaded actuator 21 for actuation thereof against spring bias according to the position of the edge of the web 13 over the slot 56. Other edge sensing and web control means may be employed and may comprise mechanical, pneumatic, hydraulic, or electronic means, or combinations thereof, a number of variations of such senser and control means being known to the art.

This invention is not restricted to the slavish imitation of each and every one of the details described above which have been set forth merely by way of example with the intent of most clearly setting forth the teaching of the invention. Obviously, devices may be provided which change, eliminate or add certain specific structural details without departing from the invention.

What is claimed is:

1. Web guiding apparatus comprising first and second rotatable rolls each extending from its own fixed end to its own free end transversely of the length of the guided web, said first roll extending over the web and said second roll extending under the web, means for oscillatably moving said rolls as a set back and forth, around an imaginary axis extending from the region of said fixed roll ends to the region of said free roll ends, (1) angularly away from a first condition of over-and-under relationship between the rolls and toward a second condition of side-by-side relationship between the rolls and (2) angularly away from said second condition and toward said first condition, the rolls being mounted so that said fixed ends angularly lead said free ends in moving away from said first condition and toward said second condition and said free ends angularly lead said fixed ends in moving away from said second condition and toward said first condition.

2. Web guiding apparatus comprising first and second rotatable rolls each extending from its own fixed end to its own free end transversely of the length of the guided web, said first roll extending over the web and said second roll extending under the web, means for oscillatably moving said rolls as a set back and forth, around an imaginary axis extending from the region of said fixed roll ends to the region of said free roll ends, (1) angularly away from a first condition of over-and-under relationship between the rolls and toward a second condition of side-by-side relationship between the rolls and (2) angularly away from said second condition and toward said first condition, the rolls being mounted so that said fixed ends angularly lead said free ends in moving away from said first condition and toward said second condition and said free ends angularly lead said fixed ends in moving away from said second condition and toward said first condition, means for shifting said rolls back and forth together transverse to the direction of web travel incident to said progressive back and forth movement between said first and second conditions.

3. Web guiding apparatus comprising first and second rotatable rolls each extending from its own fixed end to its own free end transversely of the length of the guided web, said first roll extending over the web and said second roll extending under the web, means for oscillatably moving said rolls as a set back and forth, around an imaginary axis extending from the region of said fixed roll ends to the region of said free roll ends, (1) angularly away from a first condition of over-and-under relationship between the rolls and toward a second condition of side-by-side relationship between the rolls and (2) angularly away from said second condition and toward said first condition, the rolls being mounted so that said fixed ends angularly lead said free ends in moving away from said first condition and toward said second condition and said free ends angularly lead said fixed ends in moving away from said second condition and toward said first condition, means for respectively increasing and decreasing the degree of angular displacement of said first and second roll means from a normal-to-web-path attitude as said rolls move back and forth between said first and second conditions.

4. Web guiding apparatus comprising first and second rotatable rolls each extending from its own fixed end to its own free end transversely of the length of the guided web, said first roll extending over the web and said second roll extending under the web, means for oscillatably moving said rolls as a set back and forth, around an imaginary axis extending from the region of said fixed roll ends to the region of said free roll ends, (1) angularly away from a first condition of over-and-under relationship between the rolls and toward a second condition of side-by-side relationship between the rolls and (2) angularly away from said second condition and toward said first condition, the rolls being mounted so that said fixed ends angularly lead said free ends in moving away from said first condition and toward said second condition and said free ends angularly lead said fixed ends in moving away from said second condition and toward said first condition, means for at least partially withdrawing said set of rolls from said web as said rolls move away from said first condition and for advancing said rolls back onto said web as said rolls move back toward said first condition.

References Cited in the file of this patent

UNITED STATES PATENTS

1,376,736	Thornber	May 3, 1921
2,374,980	Cook	May 1, 1945
2,491,636	Amos	Dec. 20, 1949

FOREIGN PATENTS

709,850	Germany	Aug. 28, 1941