US00D719795S

# (12) United States Design Patent
**Khuu**

(10) **Patent No.: US D719,795 S**
(45) **Date of Patent: ** Dec. 23, 2014**

(54) **CHOPPING BOARD**

(71) Applicant: **Howard Khuu**, Long Island City, NY (US)

(72) Inventor: **Howard Khuu**, Long Island City, NY (US)

(**) Term: **14 Years**

(21) Appl. No.: **29/478,628**

(22) Filed: **Jan. 7, 2014**

(51) **LOC (10) Cl.** ..... **07-04**

(52) **U.S. Cl.**
USPC ..... **D7/698**

(58) **Field of Classification Search**
USPC ..... D7/543, 549, 550.1, 551.2, 586, 629, D7/667, 698–699; D20/42; D32/55–57; 99/444, 446, 449; 269/13–15, 289 R, 269/291, 297–298, 302.1, 315
See application file for complete search history.

(56) **References Cited**

U.S. PATENT DOCUMENTS

D160,480 S * 10/1950 Crook ..... D7/551.2
D225,764 S * 1/1973 Duecker ..... D7/698
4,907,789 A * 3/1990 Tice ..... 269/13
D412,815 S * 8/1999 Porter ..... D7/698
D464,237 S * 10/2002 Kaposi ..... D7/698
D543,423 S * 5/2007 Benson ..... D7/698
D555,987 S * 11/2007 Williams et al. ..... D7/698
D556,522 S * 12/2007 Martinez et al. ..... D7/698
D571,167 S * 6/2008 McCammon ..... D7/698
D615,826 S * 5/2010 Tsui ..... D7/698
D629,268 S * 12/2010 Shamoon ..... D7/698
D662,146 S * 6/2012 Podd ..... D20/42
D690,565 S * 10/2013 Stewart et al. ..... D7/698

* cited by examiner

*Primary Examiner* — Ricky Pham
(74) *Attorney, Agent, or Firm* — Cozen O'Connor

(57) **CLAIM**

The ornamental design for a chopping board, as shown and described.

**DESCRIPTION**

FIG. **1** is a top perspective view of a chopping board;
FIG. **2** is a bottom perspective view thereof;
FIG. **3** is a top view thereof;
FIG. **4** is a right side view thereof, the left side view being the same; and,
FIG. **5** is a front view thereof, the back view being the same.

**1 Claim, 4 Drawing Sheets**

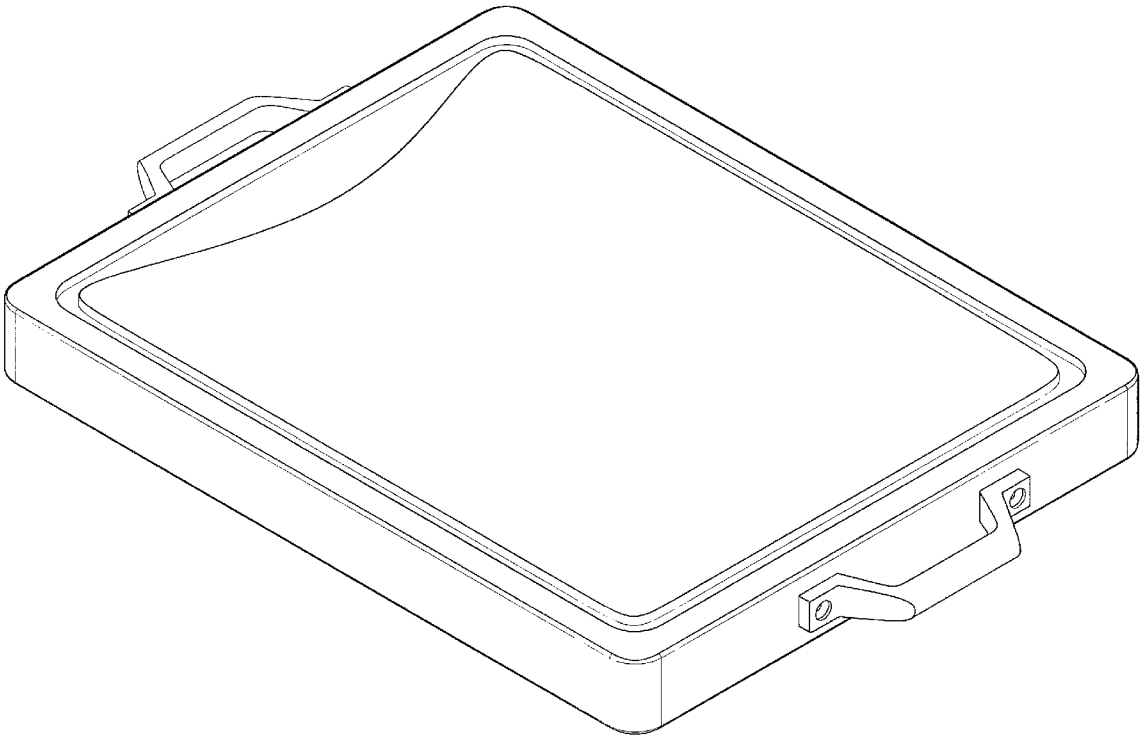

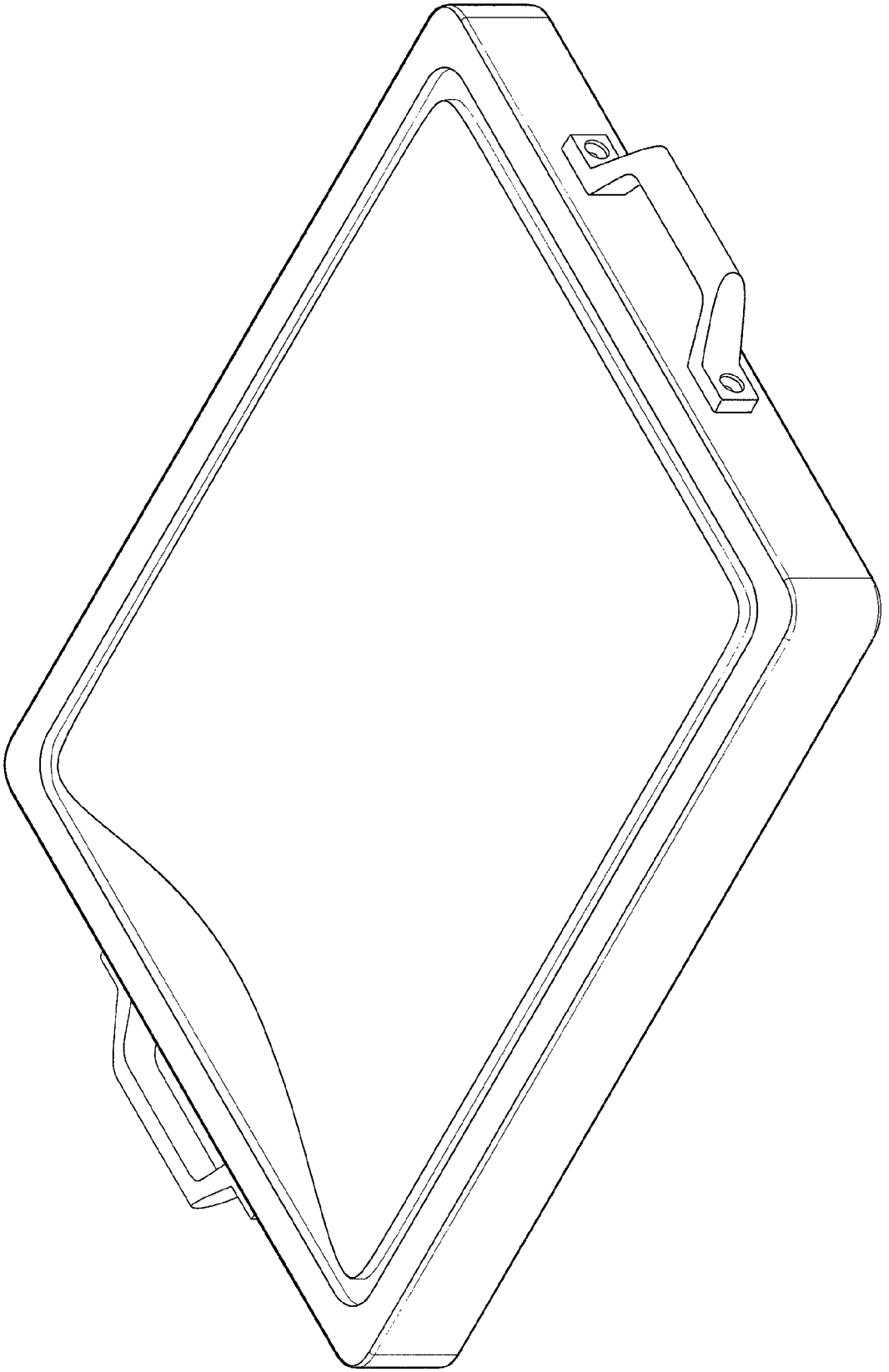

FIG. 1

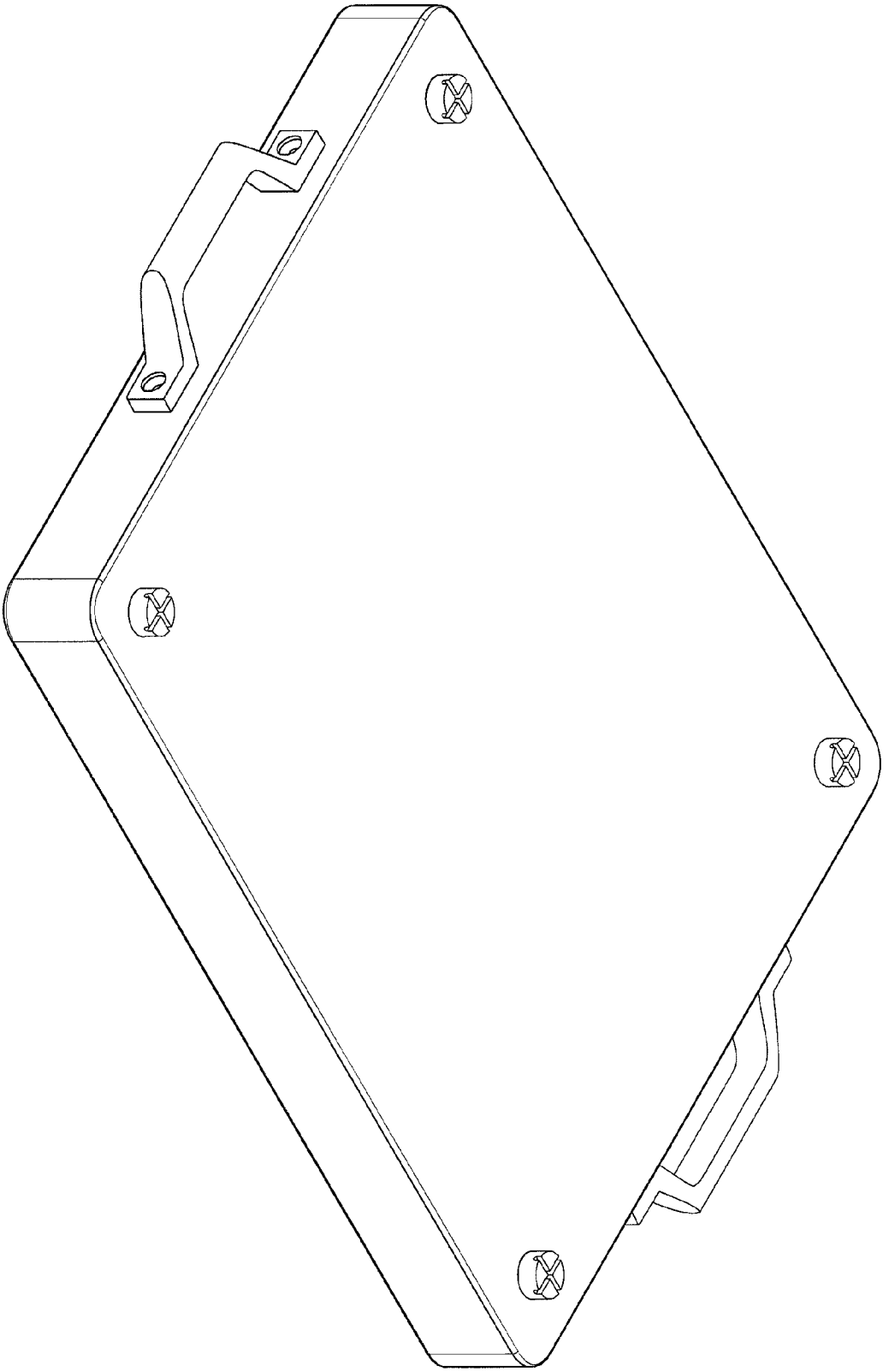

FIG. 2

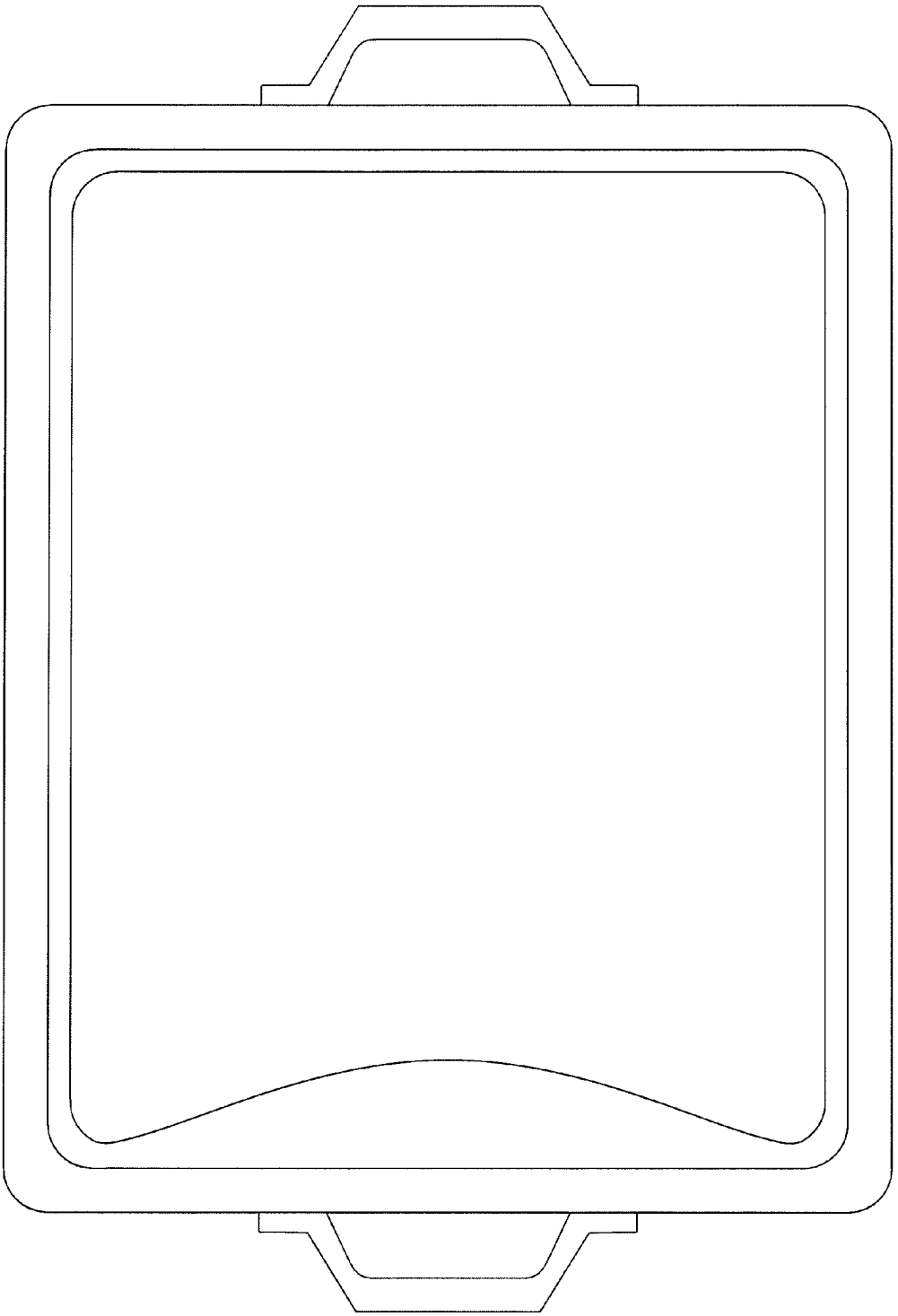

FIG. 3

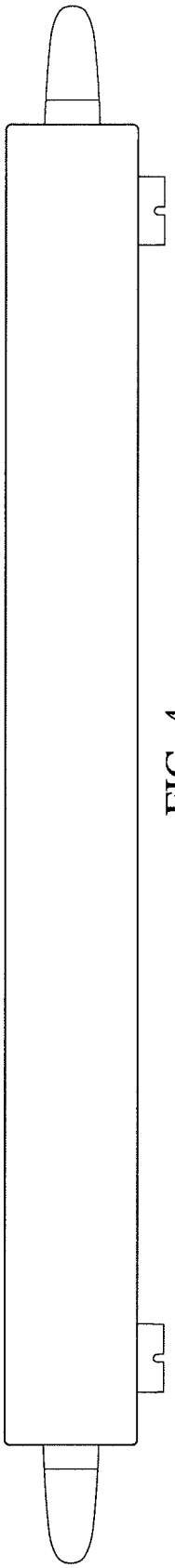

FIG. 4

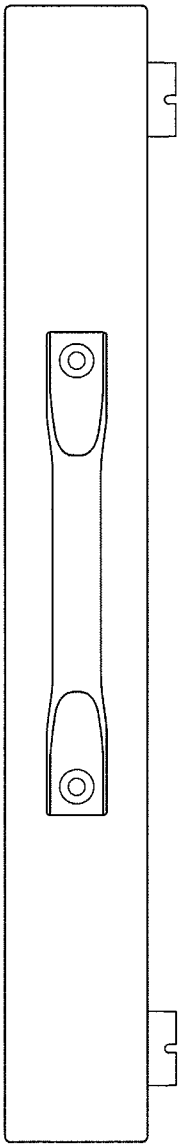

FIG. 5