April 8, 1952 O. MURPHEY 2,592,057

SCAFFOLD JACK

Filed March 8, 1948

Fig. 1

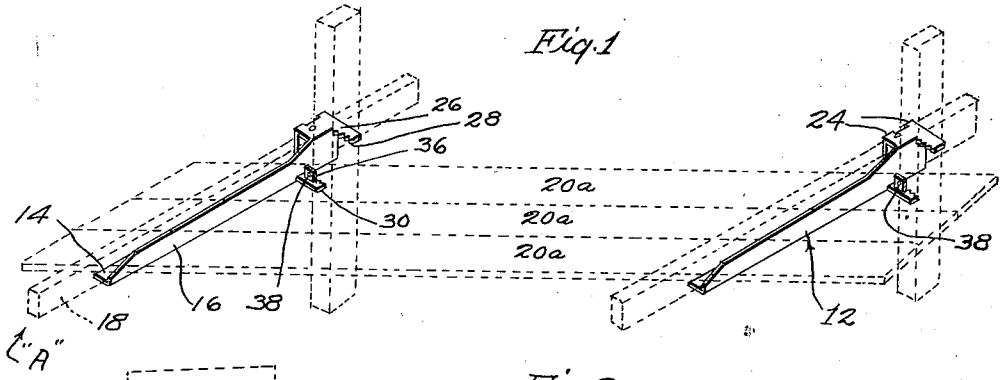

Fig. 2

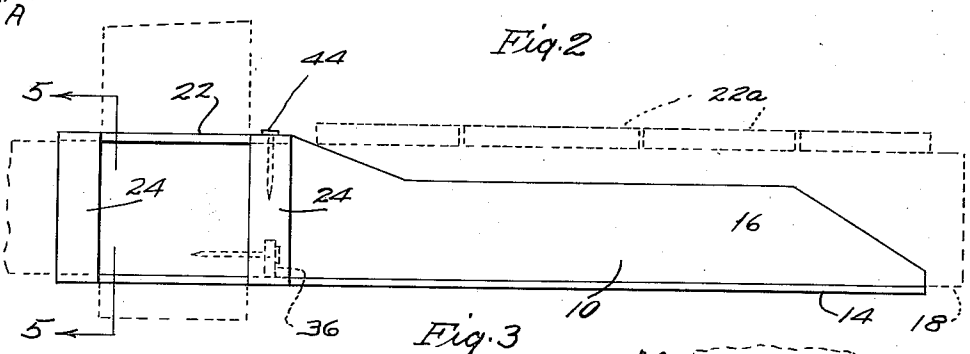

Fig. 3

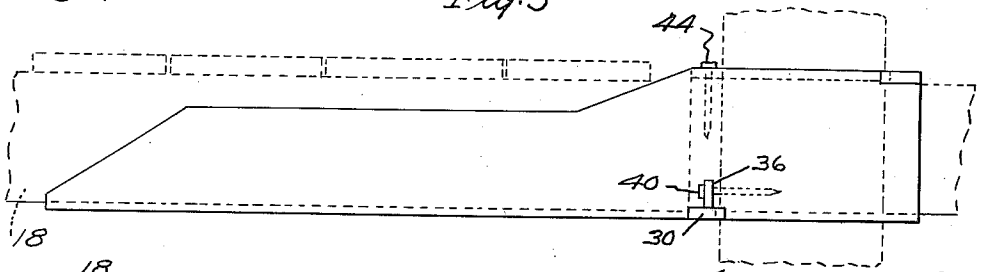

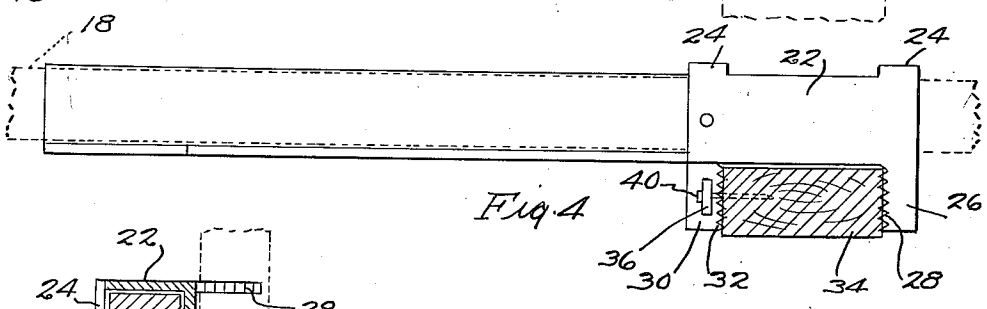

Fig. 4

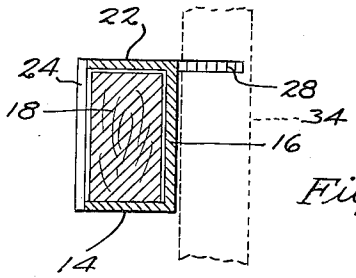

Fig. 5

INVENTOR.
Odas Murphey
BY Robt. S. Woodbury
HIS ATTY

Patented Apr. 8, 1952

2,592,057

UNITED STATES PATENT OFFICE

2,592,057

SCAFFOLD JACK

Odas Murphey, Pomona, Calif.

Application March 8, 1948, Serial No. 13,632

2 Claims. (Cl. 304—40)

1

In certain of the building construction trades, as in brick laying, plastering and painting, it is customary to build a scaffold frame work around the structure to be worked upon at different points of elevation and upon this frame work, suitable planking is laid to enable workmen to move along the face of the building in order that the work at hand may be completed.

Because of the great expense of time, material and labor involved in constructing a scaffold, many attempts at shortcuts in avoiding the entailed expense of scaffold construction have been made, but insofar as I am aware there has heretofore been no successful substitute for the ordinary scaffold for enabling a workman to move to and from the elevated exterior of a building as a means to completing a task at hand.

Largely as a means of avoiding the very considerable item of loss of time, labor and material to build suitable scaffolding for certain of the building trades, I have conceived a novel, yet simple and practical means to support a platform for workmen to work upon, and to this end I form a pair of arms having oppositely disposed teeth adapted to bite into a vertical wooden support whereby slippage is prevented under load, and which arms are adapted to support transverse timbers upon which a platform may be laid for work purposes.

Having thus briefly stated the nature of my invention, it is a prime object thereof to provide a simple, low cost and sturdy platform support adapted to substitute in certain instances, regular scaffolding construction and in certain other instances to supplement such construction.

A further object of the invention is to provide a basic support for a platform, the support being so constructed as to readily enable the same to be vertically moved upon vertically disposed timbers, thereby enabling the support to serve successive levels without the heretofore necessary expense of time, labor and material to build up to each successive level upon which work was necessary.

An advantage of the invention resides in the fact that the greater the imposed load, the more firmly the supporting arms grip the vertical timber upon which the arms are detachably locked.

Another advantage of the invention resides in the fact that the arms are so constructed as to permit timbers of various lengths to be inserted therein as a direct means of supporting platforms of variable widths depending upon the nature of the work to be performed thereon.

Other objects, advantages, and features of the invention may be noted from the accompanying

2

drawing, the specification, and subjoined claims.

In the drawing:

Figure 1 is a utility view of the scaffold jack or platform support of this invention.

Figure 2 is a side-elevational view showing the scaffold jack or platform support, and in which view a vertically disposed supporting timber is shown in dotted lines, while an intermediate platform support and platform thereon, are also shown in dotted lines.

Figure 3 is a view which is analogous to Figure 2 excepting that the opposite side of the scaffold jack or platform support is shown.

Figure 4 is a top-plan view of the scaffold jack or platform support; while,

Figure 5 is a detailed view taken along line 5—5, Figure 2, showing construction.

In the drawing the reference character 10 indicates the scaffold jack of this invention, which is shown as being formed of a length of angle iron 12 having a bottom portion 14 and a side-portion 16 of such length as may be best adapted to support a suitable timber 18 upon which a platform 20 may be laid as a base for workmen when working upon a building or other similar structure above the surface of the ground.

The one end of the angle iron 12 is formed with a box-like structure having a top-surface 22 and an open side bounded by the parallel bars 24 joining the top 22 and the bottom portion 14 of the angle iron, thus forming a passageway which is bounded upon all four sides and through which the timber 18 may be adjustably inserted and whereby a base of variable width may be formed for the platform 20.

Upon the face 16 of the angle iron 12 and projecting from the outer and upper face portion thereof I weld a bar of steel 26 having a serrated edge or teeth 28, while diagonally disposed therefrom, I weld a like steel bar 30 which is also formed upon its inner edge with serrations or teeth 32, the bars 26 and 30 being spaced apart in sufficient degree to receive a dimensioned timber 34 such as a vertically disposed 2 x 4, 2 x 6, 4 x 8 between the serrated edges of the bars, and this construction is had so that the oppositely disposed teeth 28 and 32 will bite into opposite sides of the timber 34 when placed in functional position as shown in Figure 1 with a load such as the platform 20 superimposed thereon. This construction, being open upon its one side, also facilitates placing the scaffold upon and removal thereof from the vertically disposed supporting timber 34.

As reference to the drawing will also show, I

place or secure as by welding, a tab 36 of metal which is perforated with an opening 38 to receive a nail 40 which is driven into the timber 34 as an extra precaution against dislodgement of the scaffold jack or platform support upon the timber 34. Also, an opening 42 is formed in the top surface 22 as by drilling, and is likewise adapted to receive a nail 44 which is driven into the timber 18 as a precaution against creepage thereof relative to the scaffold jack or platform support 10.

The preceding description is believed to be inclusive of the physical structure of the scaffold jack or platform support of this invention.

To place the device in operation, it is only necessary to place the scaffold jack or platform support adjacent the supporting timber 34 in such manner that the serrations 28 are in contact with one edge of the timber 34, while the serrations 32 are in contact with the opposite face of the supporting timber 34. A slight pull upon the end of the angular arm 12 is sufficient to cause the teeth 28 and 32 to bite sufficiently deep therein to remain in place and since gravitational force tends to force the arm 12 downwardly, the teeth 32 are inclined to bite deeper into the element 34, and since the tendence to rotate around what may be termed a fulcrum point created by the teeth or serrations 32, the oppositely disposed teeth 28 are likewise forced deeper into the element 34 until a maximum depth of penetration is established and the scaffold jack or platform support is firmly secured in functional position, thereafter, and if desired, a nail or spike may be driven through the opening in the tab 36 as an extra precaution against dislodgement of the scaffold jack due to some extraneous force, as accidental impact therewith or other vibration.

As thus assembled upon the vertical support 34, the scaffold jack is now ready to receive the platform elements, which as the drawing shows, first, comprises a horizontal timber 18 (dotted lines) which is laid upon the angle iron face 14 and is slid longitudinally thereof into the box-like structure, upon the inner end of the arm 16, thereby holding the timber against lateral movement and preventing upset thereof when the platform and an imposed load are unbalanced with respect to the free end of the angle iron 12.

After insertion of the timber 18 in sufficient degree to leave an extension "A" of length enough to receive the planks or boards 20a of the platform 20, a nail or spike 44 may be driven through an opening in the top surface 22 as an extra precaution against creepage of the timber 18 relative to the scaffold jack.

As thus assembled the platform 20 is ready for service, affording a relatively low cost scaffold which is of ample strength for most uses, and which can be quickly and easily re-set at a different elevation upon the timber 34 if desired, or if a plural number of platform levels are desired, it is only necessary to duplicate the afore-described operation to build as many platform levels alongside a structure as may be reasonably required to perform a given task.

After removal of the platform elements and the nails 42 and 44 from the timbers 18 and 34, it is only necessary to lift upwardly upon the free end of the jack 10 to cause the teeth 28 and 32 to become disengaged from their bite in the timber 34, whereafter the scaffold jack is free to be moved to another location, or to disuse and storage as the case may be.

Having thus described my invention in its preferred form, that which I desire to protect by Letters Patent is:

1. A platform support comprising a length of angle iron having a bottom surface and a side surface integral with and at right angles to one another, a box-like structure upon one of the ends of said angle iron and including as elements thereof said bottom and side surfaces whereby a horizontal platform support element inserted therein is held against lateral movement and unbalance over a free end of said angle iron, and oppositely disposed serrated bars projecting from the exterior surface of said box-like structure adapted and arranged to bite into opposite sides of a supporting timber vertically disposed between said bars upon application of gravitational pressure upon said platform support.

2. In a scaffold for support of a work platform, a support device for said platform, said device being formed of a length of angle iron having a horizontal surface and a side-wall surface disposed at right angles to the horizontal surface, said angle iron having an unencumbered free end and having an open ended box-like structure upon the other of the ends thereof adapted and arranged to slidably receive and horizontally support a four sided timber thereon and within the box-like structure against lateral rotation and end upset, a pair of fingers projecting diagonally opposite one another on the outer face of said box-like structure and having serrations on the inner edge of each thereof so as to bite into the opposite sides of vertical scaffold elements when placed thereon and subjected to a gravitational pressure upon said support device.

ODAS MURPHEY.

REFERENCES CITED

The following references are of record in the file of this patent:

UNITED STATES PATENTS

Number	Name	Date
370,739	Hyson	Sept. 27, 1887
1,009,679	McFadden	Nov. 21, 1911
1,034,365	Hauser	July 30, 1912
1,384,180	Clodfelter	July 12, 1921
1,597,095	Martinson	Aug. 24, 1926
1,613,716	Mylaens	Jan. 11, 1927
1,760,803	Wirth	May 27, 1930
2,413,569	Isakson	Dec. 31, 1946

FOREIGN PATENTS

Number	Country	Date
54,286	Germany	July 10, 1912