April 4, 1967 P. KRAHN 3,312,516

SLIDE FRAME OR THE LIKE

Filed July 15, 1965

FIG. 1

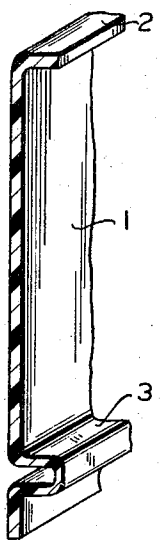

FIG. 2

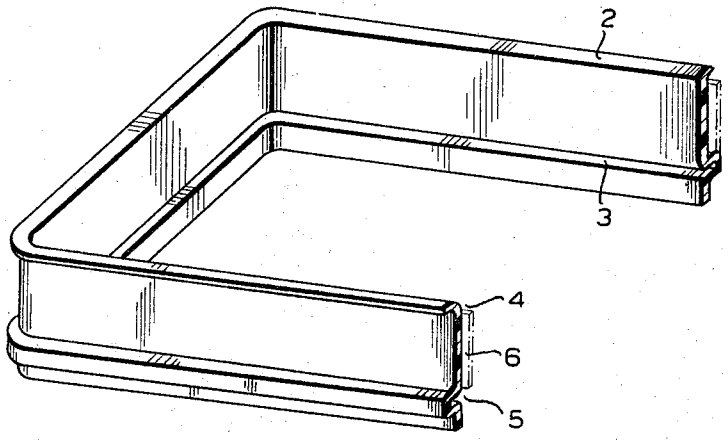

INVENTOR

Paul Krahn

By Cushman, Darby & Cushman

Attorneys

United States Patent Office

3,312,516

Patented Apr. 4, 1967

3,312,516

SLIDE FRAME OR THE LIKE

Paul Krahn, Am Knie 29, Postfach 450, Herford, Westphalia, Germany

Filed July 15, 1965, Ser. No. 472,265
Claims priority, application Germany, July 18, 1964, K 48,468; Reg. No. (utility model) 1,903,658
6 Claims. (Cl. 312—330)

The invention relates to drawers for chests, tables, desks or the like and more particularly to the frame of such drawer. According to common practice the parts of such drawers are made of wood. In recent years, plastic materials have increasingly been used also for the manufacture of parts such as drawers for furniture which can be produced either by deepdrawing or injection molding processes.

These known manufacturing processes have the disadvantage that the furniture manufacturer needs large storage facilities to have a sufficient number of drawers in the required sizes at his disposal. A large storeroom is already required if only a few weeks' supply of drawers manufactured according to the known processes is to be at hand.

The object of the invention is to produce a drawer or the like consisting of plastic material which can be assembled in a simple manner by the furniture producer from a profiled plastic board. The furniture manufacturer therefore need only store the plastic board sections which require but little space. According to the invention a drawer or the like is proposed characterized in that the side and rear walls of the drawers consist of one extruded profiled plastic board having an outwardly protruding channeled rib in its lower portion and an outwardly projecting flange at its upper edge. The extruded plastic board described above is delivered to the furniture manufacturer from the extruding plant cut exactly to the required length; to produce the side frame for the drawer, it is only necessary to heat the profiled board at those points which are to form the rear corners of the drawer and to bend the board into the form of the frame. The profiled board section thereby forms both side walls and the rear cross piece of the drawer. The front cross piece is mounted to the frame after insertion of the bottom plate.

Further characteristics and particular features of the invention are given in the claims and the following description of one advantageous embodiment which serves as an example only.

In the drawings:

FIGURE 1 is a perspective view of the extruded plastic board,

FIGURE 2 is a perspective view of the side and rear walls of the drawer after bending the plastic board and before insertion of the bottom plate and mounting of the front cross piece.

As shown in FIGURE 1 the plastic board section **1** is provided with an upper outwardly projecting flange **2** and a lower outwardly projecting channeled rib **3**. Since both the flange **2** and the channeled rib **3** project on the same side the section can be bent in a simple manner into the configuration shown in FIGURE 2. The section is made of a thermoplastic material, e.g., polyethylene or polypropylene, and can therefore easily be formed into the desired configuration after heating it. The heating is preferably confined to the regions which form the corners of the frame. After completion of the frame shown in FIGURE 2 a bottom plate (not shown) is inserted in

the channeled rib **3**. This bottom plate can be made of a plastic board, a composition board, plywood board or any other suitable pressed or laminated material. After insertion of the bottom plate the front cross piece must be attached in order to complete the drawer. In order to make this easy, the front ends of the side walls are partially cut away to form resections **4**, **5** and leaving a projection or protrusion **6**. These projections **6** are received in corresponding recesses of the cross piece. The joining of the front cross piece with the other frame parts can be accomplished with the aid of an adhesive. To accomplish this it is advantageous to provide the projections **6** with recesses in which the adhesive material can be deposited.

Compared to prior art processes using injection molding or deepdrawing machines for the manufacture of drawers the process of the present invention is much simpler thereby cutting the tool costs considerably. Drawers of different sizes can be produced without changing the profile of the plastic board simply by cutting the board correspondingly. With prior art manufacturing processes it is practically impossible to make any additional changes later on.

I claim:

1. Drawers or the like characterized in that the side walls and rear wall are made of one continuous thermoplastic board, said board having a continuous outwardly projecting flange at the upper edge of the board and a continuous outwardly projecting channeled rib disposed above the lower edge of the said board.

2. The article of claim **1** wherein the terminal ends of said board have projections extending therefrom in the same plane as the wall portion of said board, whereby said projection may be received in corresponding recessed portions of a front crosspiece.

3. The article of claim **2** wherein there is a recessed portion at the terminal ends of the said projections, whereby an adhesive may be received in said recessed portions of said projections.

4. A process for producing a drawer or the like comprising providing a thermoplastic board having a continuous outwardly projecting flange at the upper edge of the board and a continuous outwardly projecting channeled rib at the lower portion of the board, heating the board at discrete portions along the length of the board, bending the board at said discrete portions, whereby all but one of the walls of a drawer is formed, and removing a part of the terminal ends of the said board, whereby projections are formed in the same plane as the wall portion of said board.

5. A process according to claim **4** comprising forming a recess in the terminal ends of said projections.

6. A process according to claim **5** comprising applying an adhesive in said recess of said projections, whereby the said projections may be glued in corresponding recessed portions of a front crosspiece of a drawer.

References Cited by the Examiner

UNITED STATES PATENTS

948,378	2/1910	Prouty	220—4
2,739,636	3/1956	Tyler	264—339 X
3,113,788	12/1963	Johnston	297—439 X
3,184,095	5/1965	Brandon et al.	220—21

CLAUDE A. LE ROY, *Primary Examiner.*

CHANCELLOR E. HARRIS, *Examiner.*

F. DOMOTOR, *Assistant Examiner.*