Jan. 22, 1935. M. B. SMITH 1,988,860

GLIDER CONSTRUCTION

Filed Sept. 1, 1933

Fig. 1.

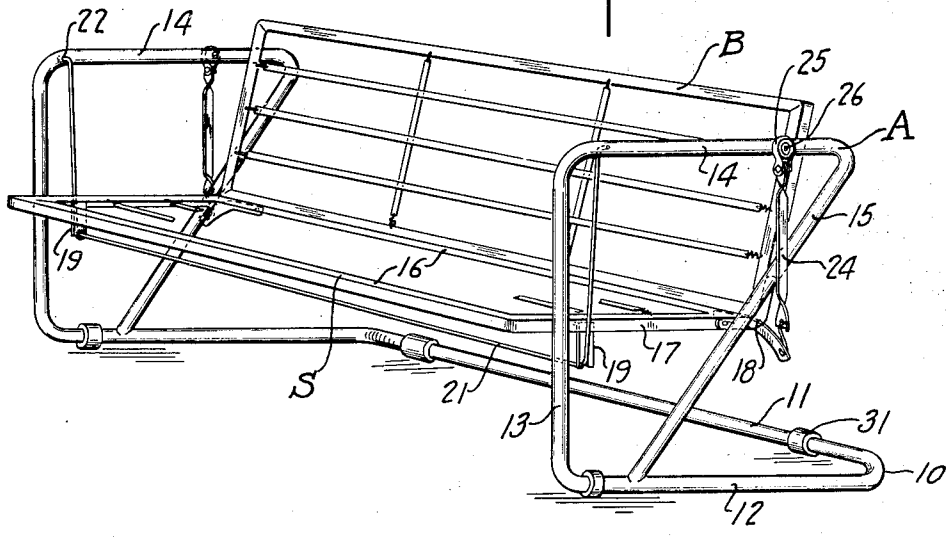

Fig. 2.

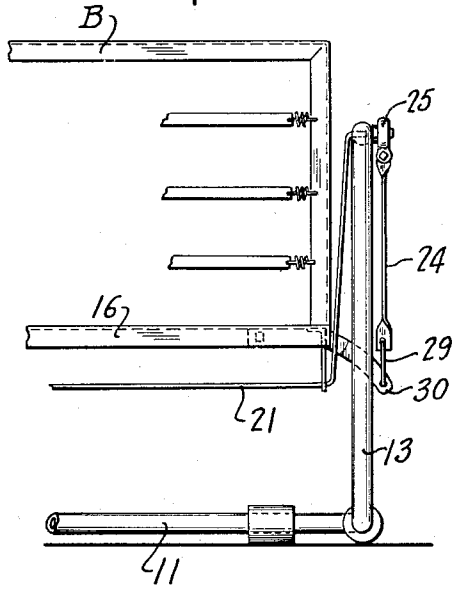

Fig. 3.

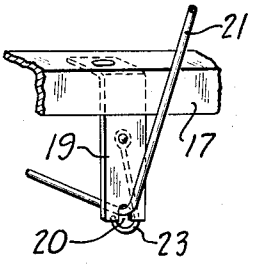

Fig. 4.

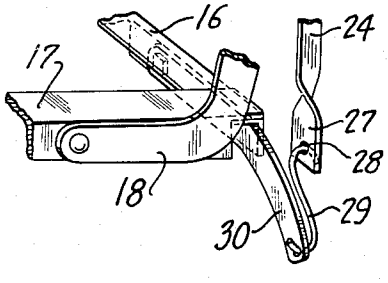

Inventor

MILTON B. SMITH

By Owen & Owen

Attorney

Patented Jan. 22, 1935 1,988,860

UNITED STATES PATENT OFFICE

1,988,860

GLIDER CONSTRUCTION

Milton B. Smith, Perrysburg, Ohio, assignor to The Hettrick Manufacturing Company, Toledo, Ohio, a corporation of Ohio

Application September 1, 1933, Serial No. 687,825

6 Claims. (Cl. 5—129)

This invention relates to gliders or couch hammocks, and an object is to produce a glider having the new and improved features of construction and arrangement hereinafter described.

For purposes of illustration, but not of limitation, an embodiment of the invention is shown on the accompanying drawing, in which:

Figure 1 is a perspective view of the glider;

Figure 2 is a front elevation of one end portion of the glider;

Figure 3 is an enlarged view showing the means for connecting the cradle bar to the seat; and

Figure 4 is an enlarged view showing the means for suspending the rear portion of the seat from the supporting frame.

The illustrated embodiment of the invention comprises a glider or couch hammock having a supporting frame A from which is suspended a seat structure S to which is connected the usual back B. Heretofore, attempts have been made to provide a tubular supporting frame for a glider, but for one reason or another, these have failed to be entirely satisfactory. Some of them have been too cumbersome and expensive, and others have not been sufficiently strong and sturdy for the purpose. According to this invention the supporting frame A is of one-piece tubular construction, and consists of a U-shaped base 10 having a horizontal portion 11 disposed rearwardly of the back B and forwardly extending portions 12 which terminate in vertically upright posts or legs 13, the upper end portions of which are disposed above the seat S. Integral with the upper end of each leg 13 is a horizontal or rearwardly extending arm portion 14 disposed substantially parallel to the base portions 12. The horizontal or arm portions 14 terminate at their rear ends short of the base portions 12, and integral with the rear end of each arm portion 14 and extending downwardly and forwardly is a leg or brace 15, the lower end of which is secured to the respective base portion 12 forwardly thereof but spaced rearwardly a short distance from the adjacent leg 13. As will hereinafter appear, the arrangement of the legs 15 affords sufficient clearance to enable the glider to swing to and fro in the desired manner.

The seat frame S may be of any desired construction, but in this instance is shown formed of angle irons, there being spaced front and rear side bars 16 which are connected at their ends by cross bars 17. Suitably secured to the rear end of the seat frame is the back B, which is of similar construction, and may be secured in place by brace members 18 at opposite ends thereof. Secured to each of the cross bars 17 of the seat frame and spaced rearwardly from the front edge thereof are depending legs 19. Each leg has a notch 20 at the lower end to receive a substantially U-shaped cradle bar 21, which extends beneath the seat frame. The upper ends of the cradle bar 21 have outwardly turned end portions 22 which are pivotally connected to the horizontal arm portions 14 of the supporting frame. The cradle bar 21 is retained in the notch portions 20 by fasteners or hooks 23, which are secured to the legs 19 and are adapted releasably to retain the bar in place. It should be noted that the cradle bar is pivoted to the arm portions 14 on the inner side of the glider frame for a purpose hereinafter appearing.

For supporting the rear end of the seat frame S strap iron links or hangers 24 are pivotally connected to the outer side of each of the arms 14. In this instance a sleeve 25 is mounted on the upper end of each hanger 24 and engages a ball bearing 26 mounted on the arm 14. The lower end portion 27 of each hanger 24 is bent to lie in a plane substantially parallel with the bar 16, and formed in the portion 27 is a hole 28 to receive a substantially S-shaped link 29. The link 29 is connected at its opposite end to a leg 30, which is fixed to the adjacent bar 16 and the seat frame S, and extends outwardly and downwardly therefrom.

It will be noted that the cradle bar 21 is secured to the inner side of the supporting frame, but the hangers or links 24 are mounted on the outer side of the frame, and this arrangement of suspension devices provides a balanced construction and militates against the upright portions of the frame being bent or forced inwardly toward each other when a weight is imposed on the seat frame S. It will be understood that the exact arrangement of suspension devices shown on the drawing is not essential, because, if desired, the cradle bar could support the rear portion of the seat frame, or instead of a cradle bar and hanger link, other forms of suspension devices can be used. The important feature is arranging the hangers so that one is on the inside of the supporting frame, and the other on the outer side.

It will also be apparent that the supporting frame is designed to afford free swinging movement to and fro, substantial forward movement of the legs 30 being permitted due to inclining the legs 15 of the supporting frame in the manner shown. In order to provide a mounting for the U-shaped base 10 of the glider-supporting

frame, several split rubber cylinders or annuli 31 are slipped in place as shown. These not only prevent the marring of the floor on which the glider is supported, but keep the glider from creeping during the swinging movements.

It is to be understood that numerous changes in construction and arrangement may be effected without departing from the spirit of the invention, especially as defined in the appended claims.

What I claim as new and desire to secure by Letters Patent is:

1. A glider comprising a supporting frame having a substantially U-shaped base, upwardly extending legs at the front end of said base, arm portions extending rearwardly from the upper ends of said legs, brace portions inclining downwardly and forwardly from the rear ends of said arm portions to said base, a seat structure, means for suspending said seat structure from said supporting frame, said suspending means including hanger devices arranged in pairs at opposite ends of said seat structure, means for connecting a hanger device of each pair to the outer side of the adjacent frame arm, means for connecting the other hanger device of each pair to the inner side of the adjacent frame arm, said hanger devices disposed at the rear of said frame being connected to the outer side of said arms, legs extending outwardly from said seat structure at the rear end thereof, and connections between the rear hanger devices and adjacent legs respectively.

2. A glider comprising a one-piece supporting frame of tubular construction having a substantially U-shaped base, legs extending upwardly from the front ends of said base, substantially horizontal arms extending rearwardly from the upper ends of said legs, and brace portions inclining downwardly and forwardly from the rear ends of said arm portions to said base.

3. In a glider, a frame having a substantially U-shaped base, legs extending upwardly fom the front ends of the base, substantially horizontal arms extending rearwardly from the upper ends of the legs, and forwardly and downwardly inclined braces connected to, and forming continuations of, the rear ends of the arms and connected near the front ends of the base whereby to provide a unitary frame, said legs, arms and braces forming upright end members for the frame, and a seat suspended from the arms for swinging movements.

4. In a glider, a frame having a substantially U-shaped base, legs extending upwardly from the front parts of the ends of the base, substantially horizontal arms extending rearwardly from the upper ends of said legs, a seat, front and rear means to swingingly support the seat from the arms, and diagonal braces connected to the rear ends of the arms and to the front portions of the ends of the base and having their parts adjacent to the rear supporting means of the seat located at such distance forwardly of said rear supporting means of the seat to permit normal swinging of the seat without interference from the braces, the rear seat supporting means having lateral legs which extend transversely and rearwardly of the braces whereby the rear supporting means and the seat swing on opposite sides of the braces.

5. In a glider, a frame having a substantially U-shaped base, legs extending upwardly from the front parts of the ends of the base, substantially horizontal arms extending rearwardly from the upper ends of said legs, a seat, lateral portions carried by the seat and extending outwardly from the rear end parts of the seat, front and rear means to swingingly suspend the seat from the arms, and braces connected to the arms and to the end portions of the base, said braces having intermediate portions disposed forwardly of and in the path of movement of said lateral portions of the rear suspending means and inclined forwardly and downwardly a sufficient distance to afford clearance to permit normal swinging of the seat in the plane of the legs and without interference from the braces, the rear suspending means being connected to said lateral portions whereby the seat and the rear suspending means swing on opposite sides of the braces.

6. In a glider, a frame having a substantially U-shaped base, legs extending upwardly from the front parts of the ends of the base, substantially horizontal arms extending rearwardly from the upper ends of said legs, said arms terminating substantially vertically over the rear portions of the ends of the base and being free of connection with one another whereby to leave free space between the ends of the base, a seat, lateral portions extending outwardly from the rear end parts of the seat, front and rear means for swingingly suspending the seat from the arms, the rear means being connected to said lateral portions outwardly of the ends of the base, and braces connecting said arms and end portions of the base and each having a diagonally disposed portion which extends over and downwardly in front of the respective lateral portions and terminate near the lower ends of the respective legs.

MILTON B. SMITH.