March 20, 1934. A. McL. NICOLSON 1,951,524

VARIABLE FREQUENCY MULTIPLEX SYSTEM

Filed Jan. 24, 1931 2 Sheets-Sheet 1

FIG. 1

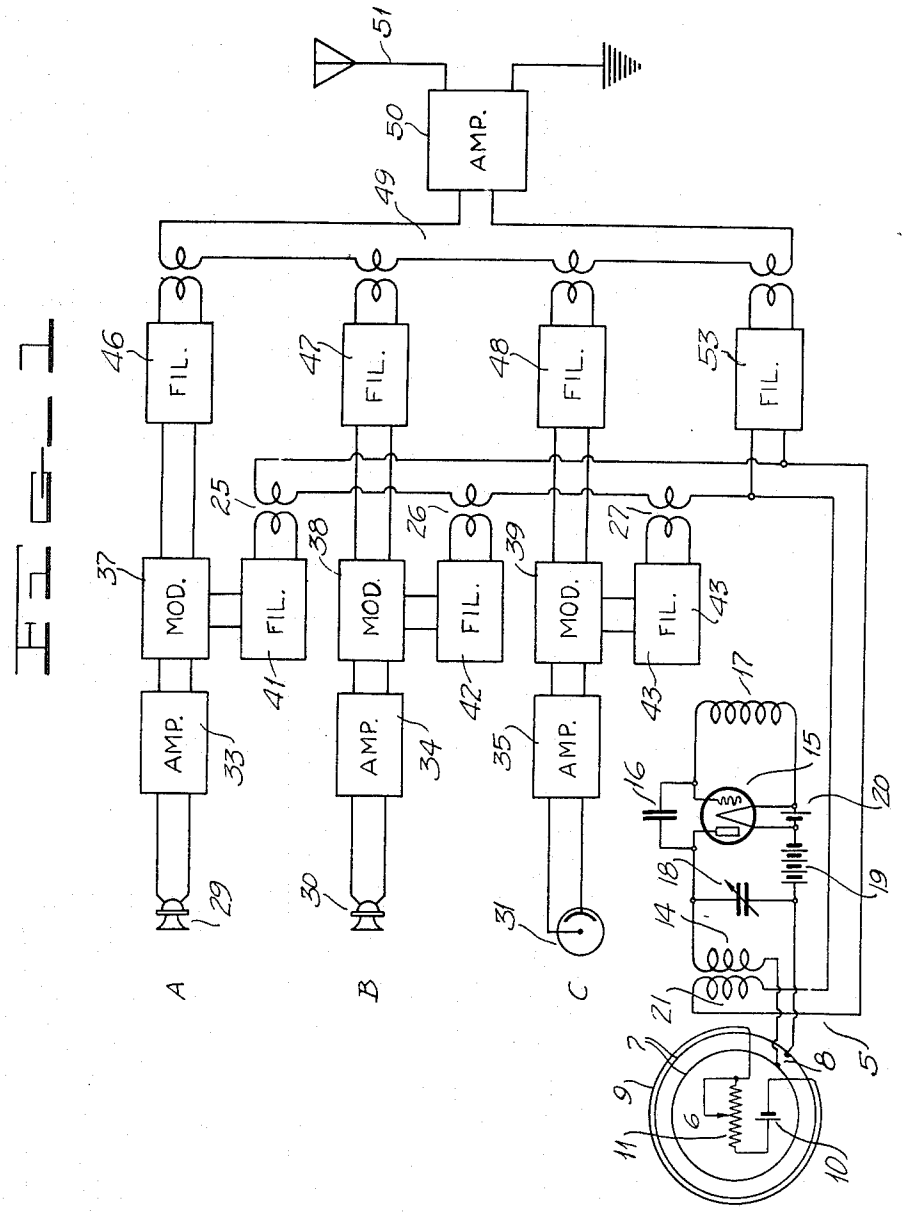

INVENTOR

Alexander McLean Nicolson.

BY Ira R. Goshaw

ATTORNEY

March 20, 1934. A. McL. NICOLSON 1,951,524

VARIABLE FREQUENCY MULTIPLEX SYSTEM

Filed Jan. 24, 1931 2 Sheets-Sheet 2

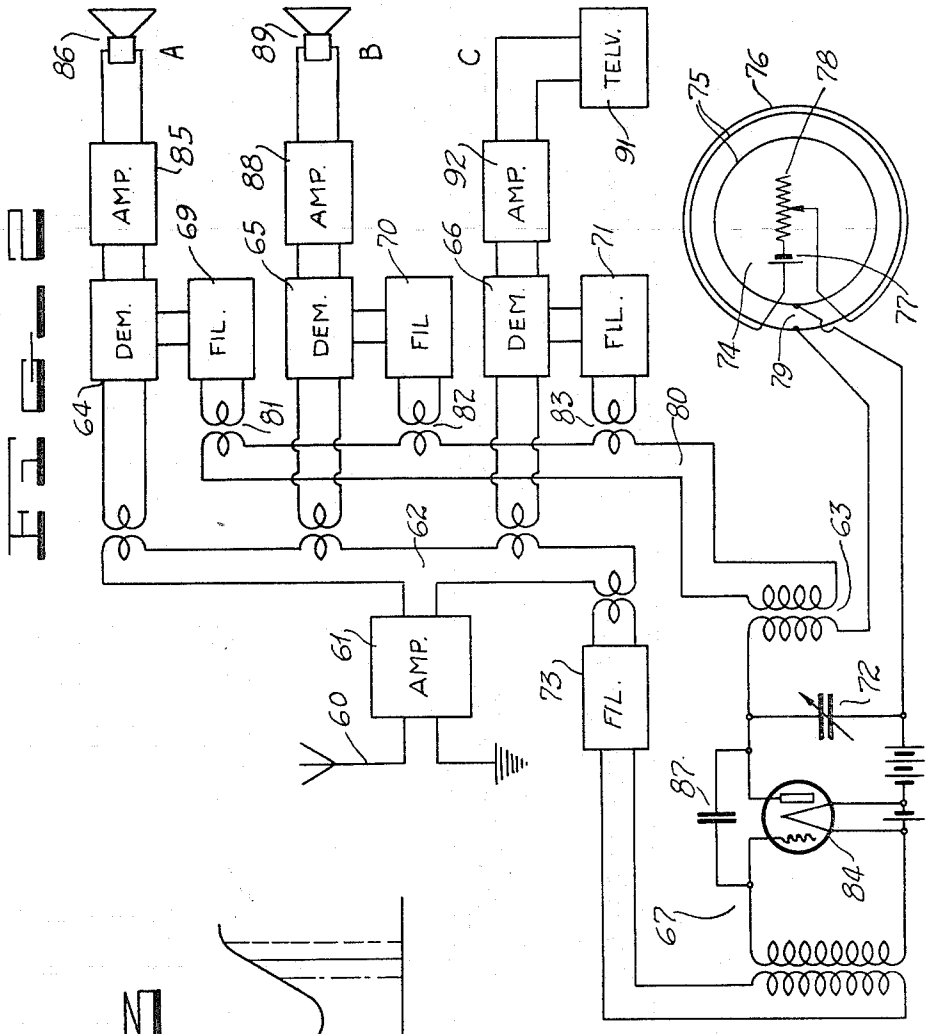

FIG. 2

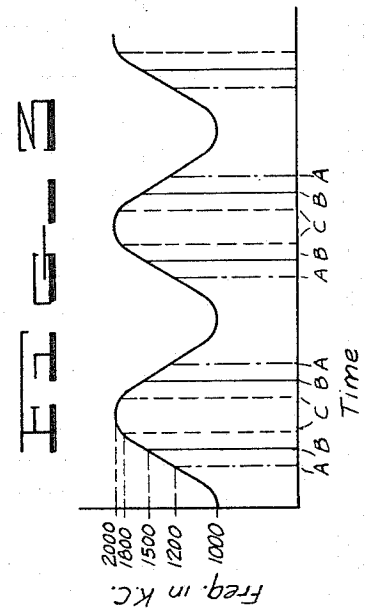

FIG. 3

INVENTOR
Alexander McLean Nicolson.
BY Isl R. Goshaw
ATTORNEY

Patented Mar. 20, 1934 1,951,524

UNITED STATES PATENT OFFICE

1,951,524

VARIABLE FREQUENCY MULTIPLEX SYSTEM

Alexander McLean Nicolson, New York, N. Y., assignor to Communication Patents, Inc., New York, N. Y., a corporation of Delaware

Application January 24, 1931, Serial No. 510,860

14 Claims. (Cl. 250—9)

This invention relates to signal transmission systems, and particularly to multiplex signaling systems in which a plurality of channels are operated over common apparatus.

An object of the invention is to transmit a plurality of signals over a common transmission medium without interference between signals.

Another object of the invention is to transmit a plurality of signals using a common oscillator for the transmission of all signals.

A further object of the invention is a multiplex transmission system employing one carrier generator for all signals.

There are several types of multiplex signaling systems known in the art such as duplex polarized systems, used for telegraph transmissions, carrier frequency systems using different carriers for each signal and impulse multiplex systems, such as disclosed in my copending application Serial No. 460,806, filed June 13, 1930.

The present invention contemplates transmission of a plurality of signals employing the same carrier frequency generator, this generator being an invention of mine disclosed in my copending application Serial No. 505,530, filed December 30, 1930. The oscillator is one which produces cyclic frequency currents varying at a high rate of speed. Selectivity is based upon frequency, frequency discrimination being obtained by the use of band pass filters of the type well known in the art.

The invention will be more comprehensive from the following description taken in conjunction with the accompanying drawings, in which:

Figure 1 is a combination schematic and diagrammatic drawing of a transmitter embodying the invention.

Fig. 2 is a similar drawing of the receiving apparatus; and

Fig. 3 is a graph showing the order in which the channels are created.

Referring particularly to Figure 1, an oscillator 5 produces a frequency band in cyclic order in which the tuning of the frequency control circuit is varied by varying the inductance thereof. The inductance is varied by the use of an arc rail system 6 having arc rails 7, a starting gap 8 and a field winding 9 supplied from a direct current source 10 controlled by the rheostat 11. The rails are shown in circular form, but they may have any form desired depending upon the uniformity of the frequency variation. The winding 9 represents a multi-turn coil and is so arranged as to produce a driving field for the arc. The change in the tuning inductance, comprising a fixed inductance 14, created by the propagation of the arc around the rails by the field 9, produces the variable cyclic frequency illustrated by the curve in Fig. 3. The remainder of the oscillator circuit comprises a vacuum tube 15, coupling condenser 16, grid inductance 17 and the tuning capacity 18 with the energizing sources 19 and 20. The output from the oscillator 5 will be obtained in the coil 21 and fed through a series circuit including the primaries of transformers 25, 26 and 27. This oscillator operates in the same manner as that disclosed in my copending application Ser. No. 505,530, filed December 30, 1930.

Three signal channels A, B and C are shown, it being understood that any additional number may be employed by the addition of apparatus similar to any one of the present channels. The sources of signals in channels A and B are shown as microphones 29 and 30, and the source of signals in channel C is the photoelectric cell 31 which may be associated with scanning apparatus for the transmission of television signals. The signal in each channel is amplified by the amplifiers 33, 34 and 35, respectively, the outputs of which are fed into modulators 37, 38 and 39, respectively. These modulators receive their carrier frequency currents through filters 41, 42 and 43, which are transmitted to the latter from the transformers 25, 26 and 27, respectively. After modulation, the modulated carriers are passed through filters 46, 47 and 48 into a common output channel 49, after which they are amplified by an amplifier 50 for transmission over an antenna system 51. This antenna system may be replaced by a wire line without interfering with the principles of the invention.

The filters 46, 47 and 48 eliminate from the output of the modulators 37, 38 and 39, respectively, one side band and the carrier so that the frequencies received in the output circuit 49 are only one side band or the products of modulation of each modulator. A filter 53 connects the output of the oscillator 5 to the output circuit 49. This filter, however, is a high pass filter, and passes only a small range of frequencies in the upper portion of the frequency spectrum generated by the oscillator 5, the operation of which will be described hereinafter.

In Fig. 3 the band of frequencies produced by the oscillator 5 is illustrated by the solid curve which may be of any configuration according to the form of the arc rails 7 which determines the variation of the inductance in the tuned circuit of the oscillator. With the circular type of rails,

however, an approximate sinusoidal variation in frequency is obtainable. Let us assume that the range of frequencies produced by the oscillator 5 lies within the limits of 1000 and 2000 kilocycles for purposes of illustration. This frequency band may, of course, be much narrower than this, or it may be wider, but is used here merely for purposes of illustration. Assuming further that it is desirable to use this range for the transmission of the three signals A, B and C, which are chosen as having a median frequency of 1,200, 1,500 and 1,800 kilocycles, respectively. Now since it is impractical to provide filters to properly eliminate a single frequency from such a band and it being unnecessary, the filters 41, 42 and 43 are designed to pass a small band of frequencies on either side of the absolute figures just stated. In other words 1,200 kilocycles is the median frequency of the A carrier frequency band, 1,500 kilocycles is the median frequency of the B carrier frequency band, and so on.

In Fig. 3 it is shown that the channels are obtained with unequal intervals of time between each transmitted impulse. This feature produces channels having different quality characteristics, but all of which have perfect continuity because of the high rate of change of the oscillator 5 which depends upon the speed at which the arc travels along the rails 7.

Referring now to Figure 2, the receiving system includes an antenna 60 and receiving amplifier 61 having an output circuit 62 common to the three channels A, B and C. The output circuit 62 feeds demodulators 64, 65 and 66 which also receives local demodulating currents from an oscillator 67 through filters 69, 70 and 71, respectively. The output circuit 62 is also connected through a filter 73 to the input of the oscillator 67. The oscillator 67 comprises vacuum tube 84, coupling condenser 87, output transformer 63, tuning capacity 72 and an arc rail system 74. The arc rail system is similar to the system 6 of Fig. 1 and comprises arc rails 75, field winding 76, d. c. source 77 and a rheostat 78 to control the supply of energy to the field winding 76. The rails 75 have a starting gap 79 for synchronizing purposes. The output circuit 80 feeds the three filters 69, 70 and 71 through the transformers 81, 82 and 83, respectively.

The output of the demodulator 64 is fed into the amplifier 85 and to a loud speaker 86, while the output of demodulator 65 is amplified by an amplifier 88 and transformed into sound vibrations by the loud speaker 89. The channel C being a television channel, terminates in a televisor 91 after amplification in the amplifier 92.

The operation of the above described system is as follows: The three signals, two voice signals in the channels A and B and one television signal in the channel C, are supplied to modulators 37, 38 and 39, respectively. A band of frequencies lying between 1000 and 2000 kilocycles is fed into filters 41, 42 and 43, simultaneously. The filter 41 selects from this band a small range of frequencies having a mid-frequency of 1200 kilocycles. At periodic intervals according to the curve in Fig. 3, this range of frequencies will be impressed on the filter 41 and on the modulator 37 modulating the signal in channel A. At intermediate intervals, the frequencies of 1500 and 1800 kilocycles will be impressed on filters 42 and 43, respectively, and these filters will select a corresponding frequency range but different bands of frequencies. The modulators 38 and 39 will receive the passed currents from filters 42 and 43. Filters 46, 47 and 48 are mentioned above select from the outputs of the modulators only one side band which is impressed on the output circuit 49 at mutually exclusive intervals for transmission over the antenna 51. At intervals not occupied by any of the above frequencies, the filter 53 selects a small range lying directly under the frequency of 2000 kilocycles. This frequency is unmodulated, and is transmitted separately.

The receiving system in Fig. 2 receives the serial modulations and the unmodulated impulses, and after amplification impresses them upon the demodulators 64, 65 and 66 and filter 73. The filter 73 passes to the oscillator 67, the upper range of frequencies in the form of an impulse, which produces a voltage sufficient to create an arc at the gap 79. Since this high frequency is created at the time the arc is at the starting gap 8 of the oscillator 5, the arc at the gap 79 will be created at the same instant. After the field strength of the field 76 has been adjusted to produce uniform travel of the arcs at both oscillators, the arcs will remain in synchronism by the action of the high frequency impulses received through the filter 73. Thus, the oscillator 67 supplies to the filters 69, 70 and 71 a band of frequencies similar to the band supplied by the oscillator 5. The filter 69 being identical to filter 41 of Fig. 1, the former passes to the demodulator 64, the proper carrier frequency to demodulate the side band containing signal A, and permits this signal to be detected and received at the loud speaker 86.

When no further carrier frequency current is received on the demodulator 64, the frequencies passing therethrough are beyond audibility, and have no audible effect upon the loud speaker. It is possible in this receiving system to use filters in the inputs of the demodulators 64, 65 and 66, similar to the filters 46, 47 and 48 of Fig. 1, permitting only the proper side bands to reach the demodulators 64, 65 and 66. They are not necessary, however, the system operating in the manner just explained. In channel B the filter 70 selects the 1,500 kilocycle band for demodulating the signal side band in this channel for reception upon the loud speaker 89. In the same manner filter 71 and demodulator 66 detect the signal in channel C for the televisor 91.

It is obvious that the oscillators 5 and 67 must be in synchronism, this synchronism being obtained by the transmission of a portion of the generated frequency band which is selected by filters 53 and 73 of identical design. By designing the selecting filters 41, 42, 43, 69, 70 and 71 to have a narrow range, many channels may be obtained from a single frequency band. Each signaling band may be of different widths depending upon the frequencies in the signal to be transmitted creating various necessary separations between bands. This separation is easily obtainable, however, by the above described method of carrier selection. The system is also adaptable to signal sources of different natures such as telegraph, telephone and television, all of which employ a common generator of the carrier.

Although this signaling system has been shown in its preferred embodiment, it is to be understood that equivalent systems are within the scope of the appended claims.

What is claimed is:

1. In a multiplex signaling system, means for obtaining a plurality of signals to be transmitted, a unitary cyclic carrier generator for said signals, said generator initiating different carrier fre-

quencies at mutually exclusive time intervals, and means for transmitting said signals on mutually exclusive portions of the output from said carrier generator.

2. In a multiplex signaling system, a generator for producing a cyclic carrier band of frequencies, said generator producing different carrier frequencies at mutually exclusive time intervals, means for producing a plurality of signals to be transmitted on said carrier band, and means for utilizing respective portions of said carrier band for said signals.

3. In a multiplex signaling system, a variable cyclic carrier generator having a single oscillating unit for producing different carrier frequencies at discrete time intervals, means for producing a plurality of signals to be transmitted between two points, means for dividing the output of said generator into different frequency bands, and means for transmitting said signals on respective bands.

4. In a multiplex signaling system, a cyclic varying frequency carrier generator, means for producing a plurality of signals to be transmitted between two points on said carrier, said generator being located at one of said points means for dividing the output of said generator into mutually exclusive frequency bands, means for transmitting said signals on said bands, a second similar generator located at the other of said points, and means for synchronizing said generators over the transmission medium, said second generator demodulating said signals.

5. In a multiplex signaling system, generators for producing a plurality of cyclic varying carrier frequencies, a sending station, a receiving station, one of said generators being located at each of said stations, a transmission channel between said stations, means for obtaining synchronization between generators, a plurality of means for producing a plurality of respective signals, and means for transmitting said plurality of signals on respective carrier frequencies generated by one of said generators.

6. The method of transmitting a plurality of signals on mutually exclusive channels of cyclic varying carrier current from an oscillator comprising generating cyclic variable bands of frequencies at mutually exclusive time intervals, and discriminating between bands of said frequencies in a definite order.

7. The method of transmitting a plurality of independent signals over a common transmission medium comprising generating a cyclic variable carrier frequency dividing said frequencies into mutually exclusive bands of varying carrier frequencies at mutually exclusive time intervals, and employing one of said bands for each of said signals.

8. In a multiplex signaling system, means for producing a plurality of signals to be transmitted, an oscillator unit producing cyclic variable bands of carrier frequencies at mutually exclusive time intervals, individual transmission channels for each of said signals connected to the output of said oscillator, and means for modulating said signals with respective bands of said carrier frequencies.

9. A multiplex signaling system in accordance with claim 8, in which said oscillator has a frequency varying circuit including an electrodynamic arc system.

10. In a multiplex transmission system, a plurality of signaling channels, a cyclic varying carrier generator including electrode rails located in a magnetic field, means for conducting to each of said channels mutually exclusive groups of carrier frequencies at mutually exclusive intervals, a common output circuit for all of said channels, means for conducting a portion of the output of said generator to said output circuit, and means for transmitting to a distant point the currents in said output circuit.

11. In a multiplex signaling system, cyclic varying frequency carrier generators, a transmitting station, a receiving station, one of said generators being located at each of said stations, means for transmitting an unmodulated portion of the output of said transmitting generator to said receiver station, and means for impressing said transmitted output on said receiver generator for synchronizing said receiver generator with said transmitting generator.

12. A multiplex signaling system in accordance with claim 11, in which said frequency varying element of said generators is an electro-dynamic arc system in a magnetic field.

13. In a multiplex signaling system, a plurality of signal sources located in respective signaling channels, an oscillator unit producing varying bands of carrier frequencies at mutually exclusive time intervals, said intervals being unequally divided, and means for impressing the signals to be transmitted on respective bands in accordance with the type of signal to be transmitted.

14. In a multiplex signaling system, a plurality of sources of signals located in respective signaling channels, an oscillator unit common to all of said channels for producing a different carrier frequency for each of said channels at mutually exclusive time intervals, said intervals being unequally divided to provide channels of different qualities, and means for impressing said signals on said carrier frequencies in accordance with the type of signals being transmitted.

ALEXANDER McLEAN NICOLSON.