A. H. GREENEBAUM.

SPRING SOCKET FOR SNAP FASTENERS.

APPLICATION FILED APR. 13, 1911.

1,088,981. Patented Mar. 3, 1914.

Fig. 1

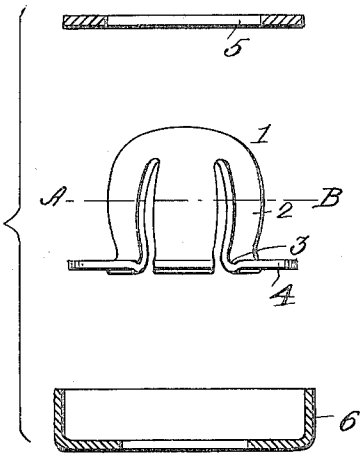

Fig. 2

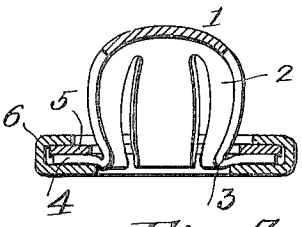

Fig. 3

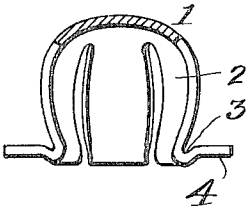

Fig. 4

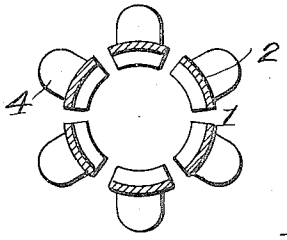

Fig. 5

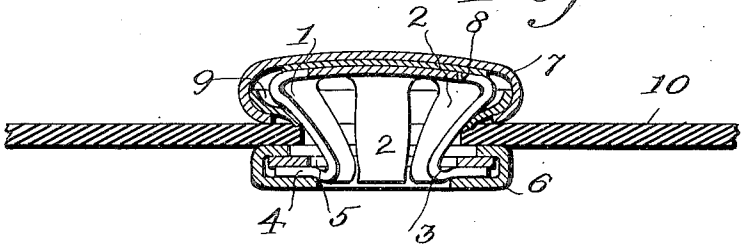

Witnesses.

D. W. Edelin.

Lillie M. Perry.

Inventor:

Abraham H. Greenebaum

by Wm. H. Finckel

Atty

UNITED STATES PATENT OFFICE.

ABRAHAM H. GREENEBAUM, OF BALTIMORE, MARYLAND, ASSIGNOR TO ALMA MANUFACTURING COMPANY OF BALTIMORE CITY, OF BALTIMORE, MARYLAND, A CORPORATION OF MARYLAND.

SPRING-SOCKET FOR SNAP-FASTENERS.

1,088,981. Specification of Letters Patent. **Patented Mar. 3, 1914.**

Application filed April 13, 1911. Serial No. 620,881.

To all whom it may concern:

Be it known that I, ABRAHAM H. GREENEBAUM, a citizen of the United States, residing at Baltimore, in the State of Maryland, have invented a certain new and useful Improvement in Spring-Sockets for Snap-Fasteners, of which the following is a full, clear, and exact description.

The use of snap fasteners heretofore and at present quite common and extensive in connection with gloves, is being increasingly extended to other garments, and other articles, not only where conditions are similar to those met with in gloves, but where they are entirely different, so that manufacturers have been compelled to make such fasteners to meet these new or special conditions. One of the resulting requirements is increase in size, and to meet this the construction and arrangement of parts have been necessarily modified.

The present invention has for its object the production of a spring socket for large size snap fasteners; nevertheless, while the invention is specially adapted for the larger sizes, it is not limited thereto.

The invention consists of a spring socket for snap fasteners, in which the spring is of the bird-cage type, the out-turned feet of which are encircled by a loose ring placed above the feet and the two connected by a binder placed below the feet and closed in over the ring, thereby providing for the movement of the feet as the rigid stud is engaged and disengaged, and so that when the body of the spring is passed from the back through the goods on which the fastener is used, it may be upset, or in other words, mushroomed within a top or cap which is arranged upon the opposite side of the goods to complete the socket and simultaneously set it, the ring in coöperation with a funnel-shaped holding-piece or collet in the back of the top serving to prevent the collapsing of the spring outside of the top or cap, and insuring its bellying out or mushrooming within the top or cap, all as I will proceed now more particularly to set forth and claim.

In the accompanying drawings illustrating the invention, in the several figures of which like parts are similarly designated, Figure 1 shows the component parts of the socket, the ring and binder in section, and the spring in side elevation, in the order of assembling. Fig. 2 is a cross-section of the assembled parts. Fig. 3 is a cross-section of the spring detached, and Fig. 4 is a horizontal section thereof, on line A B, Fig. 1. Fig. 5 is a cross-section of the socket as set upon a piece of goods.

The spring 1 is bent up from a star-shaped blank, not shown, which may be of ordinary construction, but of large size; so large that each of the limbs 2 may be curved in the arc of a circle, as indicated in Fig. 4, to thereby stiffen them, and that a well-defined groove 3 may be formed at the points where the feet 4 are turned out horizontally so as to produce first a sphincterate entrance into the spring chamber to adequately grasp the stud,—not shown, but of any usual or preferred construction,—and second, lines of weakness to start the spreading of the limbs, as it were tangentially, in definite correlation to combine with the cap or top in setting the device upon an article. A ring 5 having a central hole about as large as the larger diameter of the bulb-shaped portion of the spring, is placed upon the feet of the spring so as to prevent undue spreading of the individual limbs of the spring and to afford a solid surface upon which the binder 6 is closed, thereby presenting an article that may be readily handled. The binder 6 affords a convenient means to hold the spring and ring loosely together in such a manner that the spring may have the necessary resilience in use.

The top herein shown comprises a shell 7 containing an anvil or liner 8 and this shell engages a holding-piece 9, like a collet, with a funnel-shaped mouth. The funnel-shaped mouth is sufficiently large in diameter to permit the spring to enter the top, and after the equator of the spring passes into the top, its rigid form depresses the material of the article to which the socket is being applied below it, and as the pressure between the top and spring is continued, the spring itself under the control of the ring 5 will spread out or mushroom within the flared-out portion of the holding-piece or collet. While this construction of top is preferred, it is to be understood that the invention is not limited to the mere details thereof.

In assembling or setting the device, a hole

is made in the article 10; the top is placed next to the hole and the spring placed next to the hole on the opposite side of the article, and then appropriate means are brought into operation to cause the spring to enter the top. As the dome of the spring strikes the anvil and the inserting pressure continues, the spring itself will spread out in bulb fashion or mushroom within the top, as already described, so as to effect an engagement of the spring and top. The ring, spring feet, and binder combined serve as a flange, and this flange being located upon that side of the article opposite to which the top is located, the article is grasped between the top on one side and the flange on the other, and thus the device is securely affixed to or set upon the article.

The particular form of top herein shown, with its specially formed holding-piece or collet, extending well down upon the spring, prevents the possible collapse of the spring outside of the top, and serves to guide and control the mushrooming or spreading out in bulb fashion of the spring wholly within the top.

In thus setting the parts there is no undue strain placed upon them, the provision of the grooves 3 affording lines of weakness compelling the limbs to yield in predetermined lines of divergence defined by the location of the ring and insuring the mushrooming of the spring, without liability to inoperative collapse or deformation.

A spring socket of the construction herein explained may be made of any size, but it is especially useful in those large sizes required for heavy work.

What I claim is:—

A spring socket for snap fasteners, comprising a spring of the bird-cage type, the limbs of which terminate in out-turned feet and are constricted about the mouth of the socket, a ring encircling the spring next to and above its feet, a binder applied to the feet below them and closed in over the ring to unite the spring's feet and ring and allow lateral play of the spring, and a top or cap provided with a holding-piece in its back having a funnel-shaped mouth extending toward the ring when the parts are assembled, the whole adapted to be applied to goods by mushrooming the spring within the top or cap arranged above the goods, while the feet, ring and binder are located beneath the goods, said ring in connection with the holding-piece serving to prevent the collapsing of the spring outside of the top or cap above the goods in the act of setting, and insuring the mushrooming of the spring within the top or cap during such setting.

In testimony whereof I have hereunto set my hand this 12th day of April A. D. 1911.

ABRAHAM H. GREENEBAUM.

Witnesses:
NATHAN I. HECHT,
N. DOYLE.