Jan. 13, 1959 A. J. STIERNA 2,868,606

END TABLE RECORD CABINET

Filed Oct. 24, 1957 2 Sheets-Sheet 1

Fig. 1

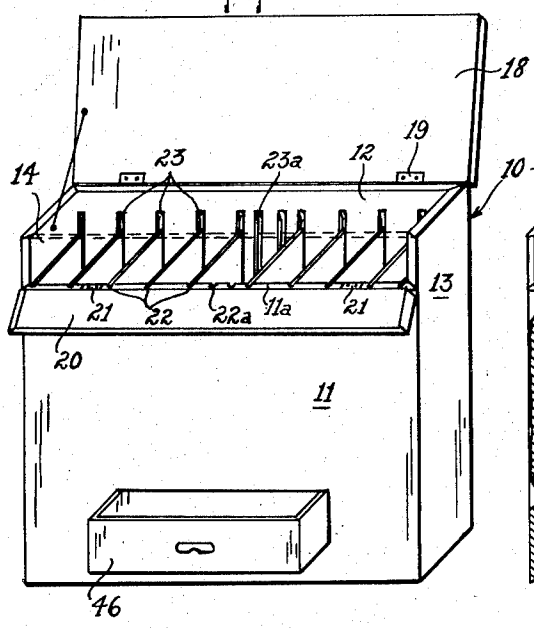

Fig. 2

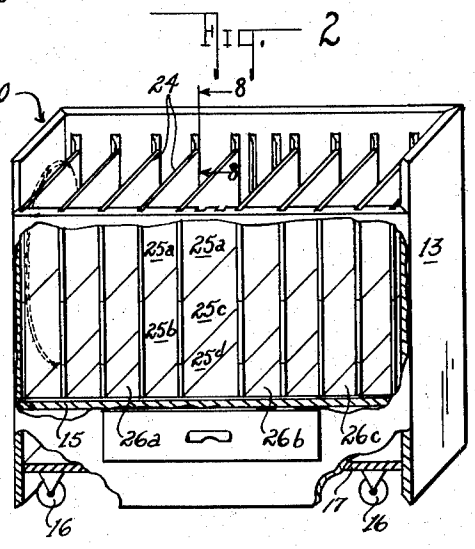

Fig. 3

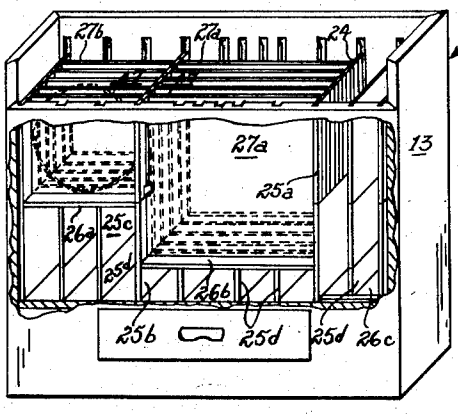

Fig. 4

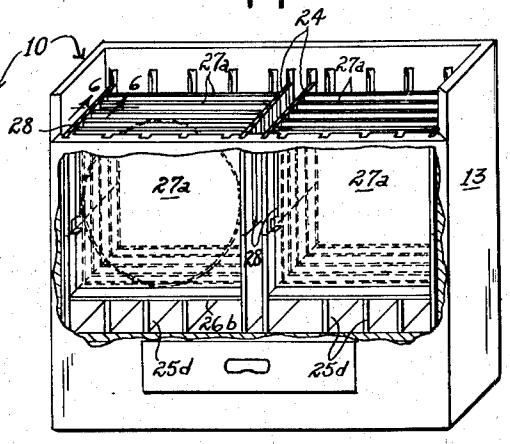

INVENTOR

ARMOS J. STIERNA

BY

Williamson, Schroeder, Adams & Meyers

ATTORNEYS

Jan. 13, 1959 A. J. STIERNA 2,868,606

END TABLE RECORD CABINET

Filed Oct. 24, 1957 2 Sheets-Sheet 2

FIG. 5

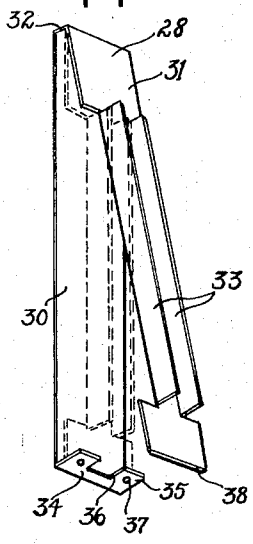

FIG. 6

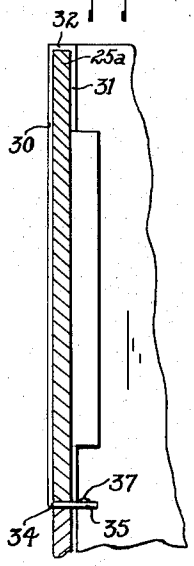

FIG. 7

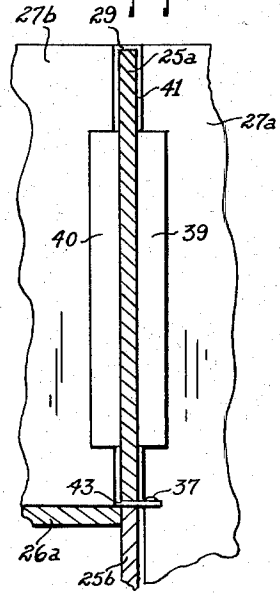

FIG. 8

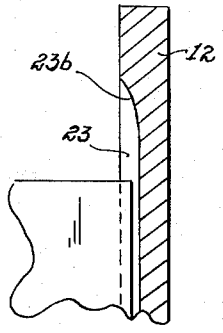

FIG. 9

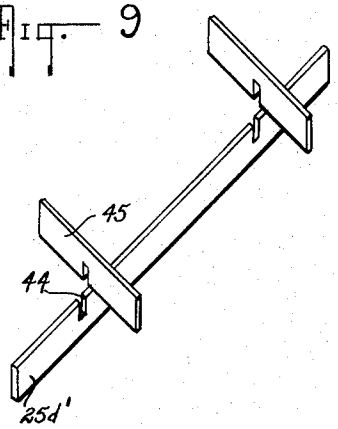

INVENTOR

ARMOS J. STIERNA

BY

Williamson, Schroeder, Adams & Meyers

ATTORNEYS

United States Patent Office

2,868,606

Patented Jan. 13, 1959

2,868,606

END TABLE RECORD CABINET

Armos J. Stierna, Minneapolis, Minn.

Application October 24, 1957, Serial No. 692,198

5 Claims. (Cl. 312—293)

This invention relates to a record cabinet which may be used as an end table, and more particularly relates to a cabinet for storing various numbers of records of different sizes.

An object of my invention is to provide a new and improved cabinet of simple and inexpensive construction which is adapted for storing various numbers of various sizes of records.

Another object of my invention is the provision in a record cabinet of a plurality of divided partitions which may be placed in a multiplicity of arrangements to define various numbers of compartments of different sizes in orders to provide adequate storage space for a collection of various sizes of records.

Still another object of my invention is to provide a record cabinet providing ready adjustability of the sizes of a plurality of compartments extending in one direction and a plurality of compartments extending in another direction so as to efficiently utilize the maximum possible space in the cabinet for storing records of various sizes.

These and other objects and advantages of my invention will more fully appear from the following description made in connection with the accompanying drawings wherein like reference characters refer to the same or similar parts throughout the several views and in which:

Fig. 1 is a perspective view of the record cabinet in open condition wherein the records are exposed for ready and easy access;

Fig. 2 is a perspective view of the record cabinet with certain portions removed and portions broken away to show the interior detail of the cabinet in one arrangement;

Fig. 3 is a perspective view of the record cabinet with certain portions removed and portions broken away to show the interior of the cabinet in another arrangement;

Fig. 4 is a perspective view of the record cabinet with portions removed and portions broken away to show the interior of the cabinet in still another arrangement;

Fig. 5 is a detail perspective of one of the channel-defining straps applicable to and removable from the top panels of the partitions and showing the strap in closed position in dotted lines;

Fig. 6 is a detail section view taken on a vertical plane as indicated at substantially 6—6 in Fig. 4;

Fig. 7 is a detail section view taken on a substantially vertical plane as indicated at 7—7 in Fig. 3;

Fig. 8 is a detail section view taken on a vertical plane as indicated at substantially 8—8 in Fig. 2; and

Fig. 9 is a detail perspective view in exploded condition of a bottom partition panel and interlocking transverse supports for one of the bottom panels.

The record cabinet, which is indicated in general by numeral 10, is adapted for storing records of various sizes, such as seven, ten and twelve inch records and is adapted to be rearranged to suit the needs of a particular record collection. It should be understood that one person's collection of records may consist substantially wholly in records of one size, and the collection of another person may include only a few records of one size and multiplicity of records of another size. The record cabinet 10 is designed for use as an end table next to a davenport or other arm chair, and of course will be finished in such a manner that the cabinet will have a pleasing and neat appearance.

The record cabinet 10 has front and rear walls 11 and 12 respectively and end walls 13 and 14, and a bottom 15, which is affixed as by screws or dowels (not shown) to the walls of the cabinet. The record cabinet may be supported on caster wheels 16 which may be secured to frame member 17 which is suitably affixed to the cabinet walls. The lower edges of the cabinet walls extend downwardly into close proximity with the supporting surface and effectively conceal the caster wheels 16.

It will be noted that the upper edges of the end walls 13 and 14 and of the rear wall 12 lie in a common plane, and the top cover 18 is connected to the rear wall 12 as by hinges 19 to swing downwardly and lie flat upon the upper edges of the end and rear walls. The upper edge 11*a* of the front wall 11 is disposed below the level of the upper edges of the other walls, and a wing gate 20 is swingably connected as by hinges 21 to the upper edge 11*a* of the front wall 11 to swing upwardly from the full line position shown in Fig. 1 to the dotted line position, wherein the upper edge of the wing gate 20 is in the common horizontal plane of the upper edges of the end and rear walls.

The front and rear walls 11 and 12 of the cabinet are provided with a plurality of spaced vertical grooves 22 and 23 respectively, therein. The grooves 22 and 23 are arranged in alignment with each other and are, for the most part, regularly spaced along the front and rear walls. Certain of the grooves, such as 22*a* and 23*a* are spaced somewhat closer to the adjacent grooves than the spacing between other of the grooves for purposes which will become evident hereinafter. The grooves 22 in the front wall 11 open through the upper edge 11*a* thereof. The grooves 23 in the rear 12 terminate below the upper edge of the wall, and are normally formed with a tapered or concavely formed end portion 23*b*, substantially as shown in Fig. 8.

The spacing between the grooves in the front and rear walls is such that the spacing between certain of the grooves is substantially equal or slightly greater than the diameter of certain records which are to be stored. For instance, the spacing between certain grooves will be slightly greater than seven inches to facilitate storage of seven inch records in a direction parallel to the front and rear walls, and similarly, the spacing between certain other of the grooves will be slightly greater than ten inches, to facilitate storage of ten inch records in a direction parallel to the front and rear walls. In this regard, it should be noted that the spacing between the front and rear walls is sufficient as to allow storage of records of a certain size in a position transversely of the front and rear walls, and in the present form shown, the spacing between the front and rear walls is sufficient as to accommodate a twelve inch record therebetween.

A plurality of record compartment-defining partitions extend between the front and rear walls 11 and 12 and are carried in the grooves 22 and 23 thereof. Each of the partitions 24 includes a plurality of panels, one above another in edge-to-edge relation and extending into the grooves of the front and rear walls. The panels are of different sizes for reasons which will presently appear, and the panels of various sizes are indicated by the numerals 25*a*, 25*b*, 25*c* and 25*d*.

A plurality of bottom panels 26*a*, 26*b* and 26*c* are

also provided in the record cabinet and are oriented in horizontal positions and extend between the front and rear walls 11 and 12. The several bottom panels are of different widths so as to extend across a number of the spaces between adjacent partitions 24. The bottom panels may be placed upon the bottom 15 of the cabinet, or in different arrangements of the record storage area in the cabinet, the panels may be placed upon the upper edges of various panels of the partitions, so as to support records of various sizes in positions wherein they will be readily accessible at the top of the cabinet and above the top edges of the partitions 24. Certain of the bottom panels, such as 26*a* and 26*b*, are of widths corresponding to the diameters of various size records, and more specifically, the bottom panel 26*a* is slightly greater than the diameter of a seven inch record and the panel 26*b* is slightly greater in width than the diameter of a ten inch record. As best seen in Fig. 3, the bottom panel 26*b* may overlie a number of the bottom partition panels 25*d* so as to permit storage of the ten inch records crosswise of the partitions 24 and at an elevation such that the upper edges of the records so stored are readily available adjacent the top of the cabinet. Similarly, the bottom panel 26*a* may be supported on the upper edges of a number of partition panels 25*c* to store seven inch records in such a position as to cause the records to extend upwardly from the partitions 24 a distance to be readily accessible.

Means are provided for defining a plurality of record compartments transversely of the partitions 24, and in the form shown, such means include a plurality of divider walls 27*a* and 27*b* of different widths so as to extend between partitions held in certain of the grooves 22 and 23. The divider walls 27*a* and 27*b* are retained in upright position crosswise of the partitions 24 by means of a plurality of channel-defining straps 28 and 29 which are carried on the uppermost panels 25*a* of the partitions. As best seen in Figs. 5 and 6, the channel-defining straps 28 are integrally constructed of strips of sheet metal, each being bent back upon itself to define a pair of side or leg portions 30 and 31 which depend from the top intermediate portion 32, to be supported on the upper edge of the partition panel 25*a*. The leg portion 31 has a pair of outwardly bent channel-defining flanges 33 which are adapted to receive the end of a divider wall therebetween. The bottom end 34 of the side portion 30 is bent at right angles to underlie the bottom edge of the panel 25*a*, and has a pair of outwardly projecting ears 35 projecting outwardly therefrom which define a divider wall-receiving groove or recess 36 therebetween and which have upwardly projecting detents 37 formed therein for engaging and retaining the bottom edge 38 of the side portion 31 behind the detents to maintain the side portion 31 tightly against the partition panel 25*a*. The channel-defining straps 29 are constructed substantially identical to the straps 28 but have outwardly projecting channel-defining flanges 39 and 40 in both of the depending side portions 41 and 42 respectively for retaining divider walls 27*a* and 27*b* on opposite sides of the upright partition panel 25*a*. It will be noted that the divider wall 27*a* extends downwardly beyond the flanges 39 and through the groove of the outwardly projecting bottom end 43 of the side portion 42.

In the arrangement of the cabinet shown in Fig. 2, the partitions 24 define a plurality of record compartments therebetween, all of which extend crosswise between the front and rear walls. In this arrangement of the partitions, the compartments are adapted for storing large size, or in the form shown, twelve inch records. The bottom panels 26*a*, 26*b* and 26*c* are all emplaced upon the bottom 15 of the cabinet. It should be noted here that the height of the partition panels 25*b* is equal to the height of the partition panels 25*c* and 25*d* when engaged with each other, plus the thickness of one of the bottom panels.

In the arrangement of the partitions shown in Fig. 3, the compartments are defined for storing large size records crosswise of the cabinet adjacent one end thereof; and bottom panel 26*b* is supported on a plurality of partition panels 25*d* to support ten inch records in compartments extending crosswise of the partitions 24 and which are defined by the divider walls 27*a*; and the bottom panel 26*a* is supported above the partition panels 25*c* to support small size records in compartments extending crosswise of the partitions 24 which are defined by the divider walls 27*b*. It will therefore be seen that the cabinet is adapted in this arrangement for storing a mixture of records of different sizes.

In the arrangement shown in Fig. 4 a pair of bottom panels 26*b* are supported on the partition panels 25*d* to define compartments at each end of the cabinet for supporting intermediate size records in compartments extending transversely of the partitions 24 and longitudinally of the cabinet which are defined by the divider walls 27*a*. In addition, spaces are provided between the centralmost partitions 24 for storing a few twelve inch records in a compartment extending crosswise of the cabinet.

In the arrangement shown in Fig. 3, it may be desirable to elevate the bottom panel 26*c* above the partition panel 25*d* for storing intermediate size records in the end compartments. As seen in Fig. 9, a partition panel 25*d'* may be provided with a pair of notches 44 to interfit with the notched crossbars or stabilizing members 45 which are of substantially identical length with the width of the bottom panel 26*c* to support the same above the partition panel for supporting intermediate size records for ready accessibility above the partitions.

It should also be noted that when the wing gate 20 is swung down as shown in Fig. 1, the partitions 24 may be easily removed upwardly from the grooves 22 and 23 to facilitate interchanging the arrangement in the cabinet. When the wing gate 20 is swung upwardly into alignment with the front wall 11, the top ends of the grooves 22 are closed to prevent removal of the partition panels. Of course suitable latching and locking mechanism may be provided for retaining the wing gate 20 in its upwardly swung position and for holding the top 18 in its closed position.

A drawer 46 may be provided between the bottom 15 of the cabinet and the frame member 17 for storage of miscellaneous items such as needles, record cleaners and the like.

It will be seen that I have provided a new and novel record cabinet which may be used as an end table and in which the record compartments may be readily and easily changed about for storage of varying numbers of different sized records so as to make the record storage space conform substantially to the type of record collection possessed.

It will, of course, be understood that various changes may be made in the form, detail, arrangement and proportion of the parts without departing from the scope of my invention which consists of the matter described herein and set forth in the appended claims.

What I claim is:

1. A record cabinet including front and rear walls and a bottom, the front and rear walls having spaced vertical grooves therein, a plurality of upright partitions extending between the grooves of the front and rear walls and defining record compartments therebetween, each partition comprising a plurality of panels extending between the front and rear walls and engaging each other in edge-to-edge relation, and a plurality of horizontal bottom panels extending between the front and rear walls and extending across a plurality of compartments, said bottom panels being selectively emplaceable on the edges of a number of adjacent panels and on the cabinet bottom to support records of various sizes in readily accessible positions adjacent the top of the partitions.

2. A record cabinet including front and rear walls and

a bottom, the front and rear walls having a plurality of spaced vertical grooves therein, a pluralty of upright partitions extending between the grooves of the front and rear walls and defining record compartments therebetween, each partition comprising a plurality of panels, one above another in edge-to-edge relation and extending between the front and rear walls, the uppermost panels of certain of the partitions having vertical, divider wall-receiving channels, a plurality of divider walls between a pair of partitions and extending transversely thereto and into the channels of the uppermost panels thereof to define record compartments extending crosswise of the partitions, and a plurality of horizontal bottom panels extending between the front and rear walls and extending across a plurality of compartments, said bottom panels being selectively emplaceable on the edges of a number of adjacent panels and on the cabinet bottom to support records of various sizes in readily accessible positions adjacent the tops of the partitions.

3. A record cabinet including front and rear walls and a bottom, the front and rear walls having a plurality of spaced, vertical grooves therein, a plurality of upright partitions extending between the grooves of the front and rear walls and defining record compartments therebetween, each partition comprising a plurality of panels one above the other in edge to edge relation and extending between the front and rear walls, a plurality of rigid straps suspended from the upper edges of the uppermost panels of at least a pair of adjacent partitions, each of said straps having a side portion extending downwardly along the vertical surface of the top panel and defining an outwardly facing channel disposed in alignment with another channel on the uppermost panel of the adjacent partition, a plurality of upright divider walls extending between the channels on adjacent top panels and defining record compartments extending crosswise from the partitions, and a plurality of horizontal bottom panels extending between the front and rear walls and extending across a plurality of compartments, said bottom panels being selectively emplaceable on the edges of a number of adjacent panels and on the cabinet bottom to support records of various sizes in readily accessible positions adjacent the top of the partitions.

4. The invention set forth in claim 3 wherein the spacing between certain vertical grooves is equal to the width of certain bottom panels and also equal to the length of said divider walls and the diameter of a record to be stored in the record compartment between the divider walls, whereby to facilitate utilization of a maximum of space in the record cabinet.

5. A record cabinet including front and rear walls and a bottom, the front wall having its upper edge disposed below the upper edge of the rear wall, the front and rear walls having a plurality of spaced vertical grooves therein in opposed relation with each other, the grooves in the front wall opening upwardly through the upper edge thereof, a wing gate on the upper edge of the front wall and in the plane thereof and being hingedly connected with the upper edge of the front wall, said gate closing the upper ends of the grooves in the front wall and being swingable to permit the ends of the grooves to be opened, a plurality of upright partitions extending between the partitions of the front and rear walls and defining record compartments therebetween, each partition comprising a plurality of panels, one above another, in edge-to-edge relation and extending between the front and rear walls, and a plurality of horizontal bottom panels extending between the front and rear walls and extending across a plurality of compartments, said bottom panels being selectively emplaceable on the edges of a number of adjacent panels and on the cabinet bottom to support records of various sizes in readily accessible positions adjacent the top of the partitions.

References Cited in the file of this patent

UNITED STATES PATENTS

1,144,835	Gibson	June 29, 1915
1,464,932	Hand	Aug. 14, 1923
2,112,498	Lax	Mar. 29, 1938