United States Patent [19]

Giebel et al.

[11] **3,871,321**

[45] **Mar. 18, 1975**

[54] **SELF-COCKING EXPLOSIVELY ACTUATED CABLE CUTTER**

[75] Inventors: **Joseph L. Giebel**, Pittsburgh; **Ernest E. Temple**, Murrysville, both of Pa.

[73] Assignee: **Mine Safety Appliances Company**, Pittsburgh, Pa.

[22] Filed: **Sept. 10, 1973**

[21] Appl. No.: **395,577**

Related U.S. Application Data

[62] Division of Ser. No. 163,949, July 19, 1971, Pat. No. 3,780,689.

[52] **U.S. Cl.** ..... **114/221 A**, 30/DIG. 4, 83/639, 89/1 B, 227/10

[51] **Int. Cl.** **B63b 9/00**

[58] **Field of Search** ..... 114/221 R, 221 A, 206 A; 83/386, 639; 30/180, 228; 166/54.5, 54.6; 89/1 B; 60/26.1; 30/DIG. 4; 227/9, 10

[56] **References Cited**

UNITED STATES PATENTS

2,687,572	8/1954	Matthews	30/DIG. 4
2,806,442	9/1957	Temple	114/221 A
3,246,396	4/1966	Temple et al.	30/180 X
3,267,573	8/1966	Hill	30/228
3,308,781	3/1967	Kurtz	114/221 A

Primary Examiner—Lloyd L. King
Assistant Examiner—Randolph A. Reese
Attorney, Agent, or Firm—Brown, Murray, Flick & Peckham

[57] **ABSTRACT**

A cable cutter frame has a laterally opening recess near its front end for receiving a cable that can be cut against an anvil by a chisel slidably mounted in the frame behind the recess when it is driven forward by an explosive charge. A plunger for actuating a firing pin is carried by the frame beside the anvil and chisel and is slidable lengthwise of the frame. The plunger is provided adjacent the anvil with a lateral notch that receives one end of a trigger pin slidably disposed in a passage through the anvil, whereby to move the plunger forward against spring pressure when the anvil is moved forward by a cable. As the trigger pin is moved forward it is forced out of the notch, whereupon the plunger is driven rearwardly by a spring to actuate the firing pin. A shock absorber in front of the anvil absorbs some of the impact of the chisel against the movable anvil.

4 Claims, 1 Drawing Figure

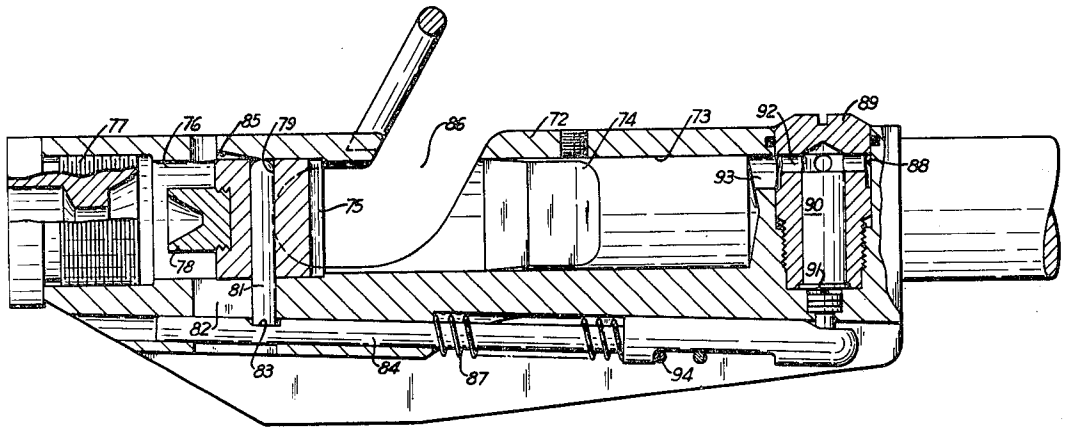

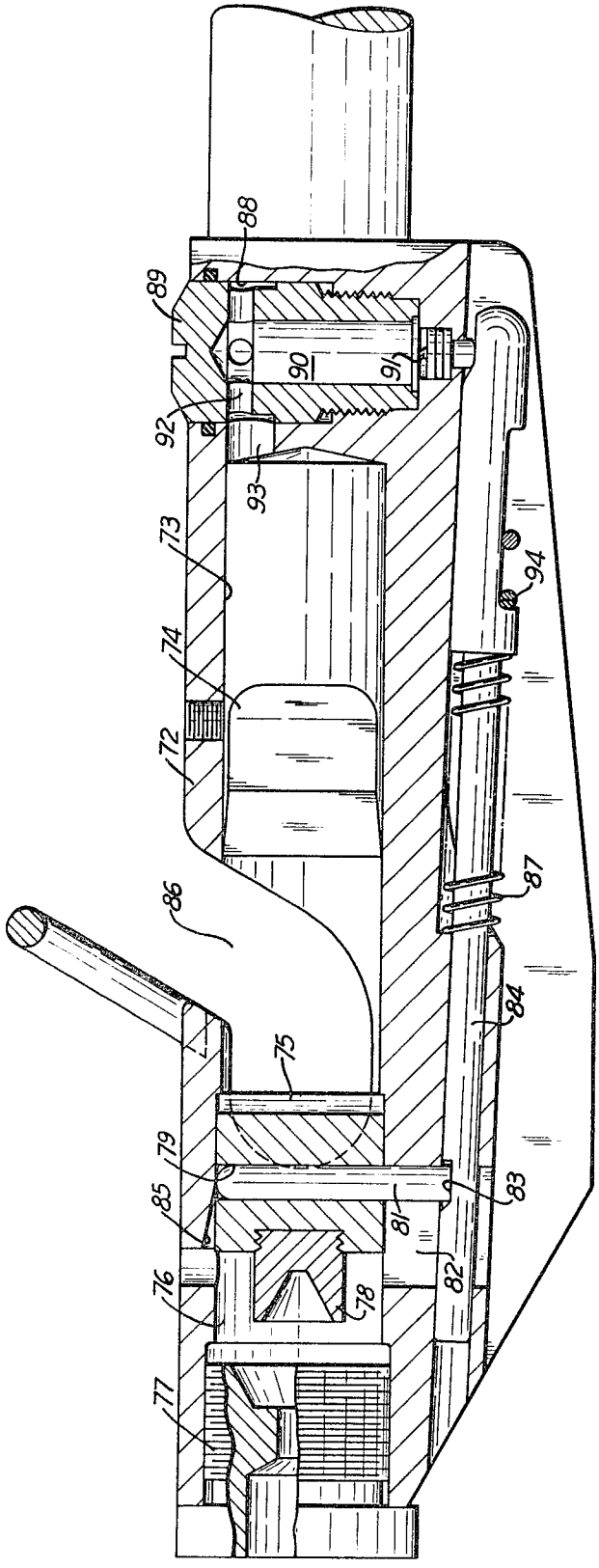
88
89
90
91
92
93
73
94
74
72
87
86
84
75
79
85
83
81
76
78
82
77

SELF-COCKING EXPLOSIVELY ACTUATED CABLE CUTTER

This application is a division of our copending Pat. application, Ser. No. 163,949, filed July 19, 1971 now U.S. Pat. No. 3,780,689.

Explosively actuated cable cutters and the like are operated by tapping a firing pin against the detonator of an explosive charge, or by manually withdrawing a firing pin against spring pressure and then releasing it to set off the charge, or by cocking the tool and holding it in that condition by means of a flexible pin that releases the firing mechanism when the cable to be cut engages and separates the pin from the firing mechanism. Only this last system of operating a cable cutting tool can be operated at a distance from the operator, but it has the disadvantage that the tool may be fired accidentally or prematurely by something engaging the pin that holds the tool in its cocked condition.

It is among the objects of this invention to provide an explosively actuated cable cutter which is not cocked until a cable that is to be cut is in correct position in the cutter, which is cocked by the cable, which is safe to use, which has a concealed and protected trigger, which has a long life and which can easily be disarmed.

The invention is illustrated in the accompanying drawing, in which a longitudinal section of a cable cutter is shown.

Referring to the drawing, the metal frame **72** of the cutter or tool is long in comparison with its width and thickness and is provided with a passage extending from its front end rearwardly throughout most of its length or even end to end. The rear end of the frame may be attached to one end of a long pole. The central portion of the frame passage forms a barrel **73** for a chisel-like cutting member **74** with a cutting edge at its front end. The front end of the passage is closed by a screw plug **77** that forms an end wall member for the frame passage. Spaced from the inner end of this plug is an anvil member **75,** behind which the opposite sides of the frame are cut away and the front side of the frame is provided with a slot **86** that opens into the cable-receiving recess thus formed.

A short distance behind the chisel **74** the frame **72** is provided with a transverse cylindrical passage **88** that extends entirely through it, although the inner or back end of this passage is reduced in diameter. A hollow cylindrical breech block **89** containing a cartridge **90** is screwed into the passage, and a firing pin **91** is slidably mounted in the reduced inner end of the passage. The pin projects out into the path of a rod-like plunger **84** slidably mounted in aligned bores extending lengthwise of the frame. One end of the plunger is notched to accommodate the firing pin and has a sloping forward wall. At the inner end of the cartridge the breech block is provided with a radial port **92** that communicates with an opening **93** into the barrel behind the chisel.

The plunger is urged toward the firing pin end of the frame by means of a coil spring **87** encircling the plunger between its enlarged front end portion and a shoulder in the frame. To normally hold the plunger in inoperative position and to make the tool self-cocking, it is a feature of this invention that a trigger pin **81** is slidably mounted in a passage **79** extending through anvil **75** from the front side of the frame to the back side. This trigger pin extends out of the back side of the anvil and through a slot **82** in the back side of the frame. The side of the pin normally engages the back wall of this slot, and the pin projects into a lateral notch **83** in spring-pressed plunger **84.** The forward wall of this notch slopes toward the front end of the pin. Also, the inner surface **85** of the frame at the outer end of the pin slopes forward and away from the anvil. The plunger causes the trigger pin to normally hold the anvil in its rearmost position as shown.

After this tool has been loaded with a cartridge it is prepared for use by removing a safety pin **94.** The tool then is hooked over a cable by moving the tool laterally to cause the cable to enter the frame recess **86,** where it will engage the anvil. Then, by pulling backward on the tool, the cable will move the anvil and trigger pin forward together in the tool frame. The pin, in turn, moves the plunger forward against the pressure of coil spring **87,** but since the inner end of the pin is pressed against the sloping wall of the plunger notch **83** the pin is urged by that wall away from the plunger and along the sloping surface **85** of the frame. This latter surface is sloped enough to allow the pin to leave the plunger notch after the plunger spring has been compressed sufficiently. The moment this occurs, the plunger is released and propelled rearwardly in the frame by its spring to cause it to drive the firing pin against the cartridge. The resulting explosion causes the chisel to be driven forward through the cable and against the anvil. The anvil now being free to slide forward in the frame unrestrained by the plunger, the chisel drives it forward and the hollow front end of a shock absorber **78** preferably carried by the anvil is crushed against plug **77** to absorb shock. This shock absorber normally is spaced from the plug far enough to permit the anvil to be moved forward by a cable far enough for the trigger pin to leave the plunger notch so that the tool can fire. The trigger pin is a simple pin and does not require a pivotal attachment to the frame. It is not exposed at all, but always concealed within the tool where it is protected from possible damage.

It will be seen that the operator does not cock this tool before it is put into use. The cocking is done by the cables that are to be cut, and that cannot occur until after a cable has entered the frame recess and engaged the anvil. When the operator pulls back on the tool the cable first cocks the tool by moving the anvil and trigger pin forward, and then fires the tool. Consequently, there is no danger of the tool being fired accidentally or before the cable is in correct position for cutting. The tool also has a longer life than heretofore, because the anvil can move when struck, with the impact of the chisel being absorbed to some extent by the shock absorber. According to the provisions of the patent statutes, we have explained the principle of our invention and have illustrated and described what we now consider to represent its best embodiment. However, we desire to have it understood that, within the scope of the appended claims, the invention may be practiced otherwise than as specifically illustrated and described.

We claim:

1. An explosively actuated cable cutter comprising a frame having a rear end and provided near its front end with a laterally opening recess for receiving a cable, an anvil member mounted in the frame between its front end and said recess and slidable lengthwise of the frame, the anvil member being in a position to be moved forward by a cable entering the recess, a chisel slidably mounted in the frame behind the recess and having a front cutting end, a firing pin in the frame be-

hind the chisel for detonating an explosive charge to drive the chisel forward in order to sever a cable against the anvil member, a plunger for actuating the firing pin carried by the frame beside said anvil member and chisel and slidable lengthwise of the frame, the plunger being provided with a lateral notch adjacent the anvil member, said anvil member having a passage therethrough normally aligned with said notch, a trigger pin slidably disposed in said passage and having one end normally projecting into said plunger notch for moving the plunger forward with the trigger pin and anvil member, the frame having an inner surface engageable by the end of the trigger pin opposite said one end and sloping forward and away from the anvil member, the front end of said notch sloping in the same direction as said sloping frame surface, whereby when the anvil member is moved forward by a cable in the recess the pin will move along said sloping surfaces and lengthwise of said passage until the pin leaves said plunger notch, and a spring between the frame and plunger adapted to be compressed by the forwardly moving plunger until the trigger pin leaves said notch

and releases the plunger, whereupon the spring will drive the plunger rearwardly to actuate the firing pin.

2. An explosively actuated cable cutter according to claim **1**, in which there is a wall member in said frame spaced in front of said anvil member, and said cutter includes a shock absorber between said anvil member and wall member.

3. An explosively actuated cable cutter according to claim **1**, in which there is a wall member in said frame spaced in front of said anvil member, and said cutter includes a shock absorber between said anvil member and wall member, said shock absorber being secured to one of said members and normally spaced from the other member far enough to permit the trigger pin to be retracted from said plunger notch before the shock absorber engages said other member.

4. An explosively actuated cable cutter according to claim **3**, in which said shock absorber is secured to said anvil member and projects forward therefrom toward said wall member.

* * * * *