Dec. 16, 1941. J. F. MALSBARY ET AL 2,266,125

PUMP

Filed Feb. 10, 1939 2 Sheets-Sheet 1

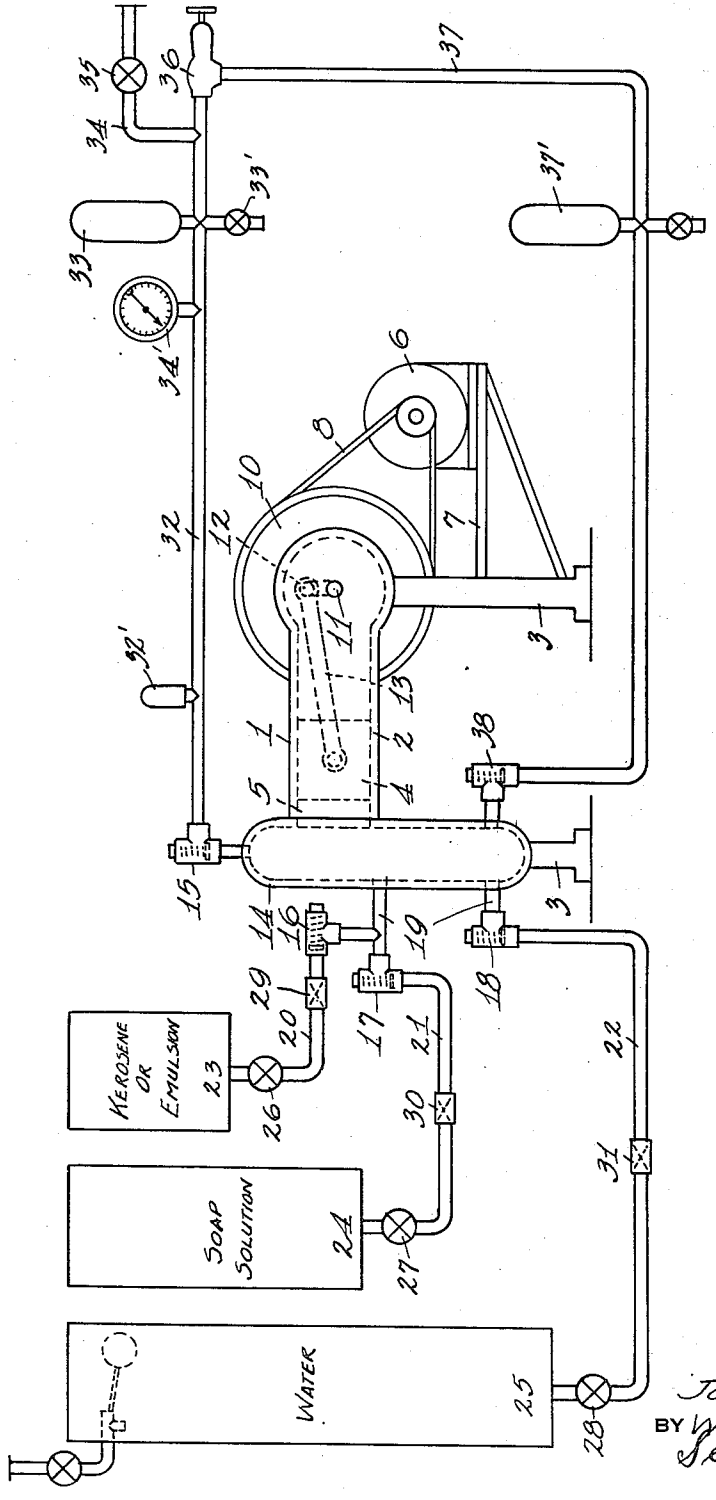

Fig. 1

INVENTORS.
JOB F. MALSBARY
BY WALTER W. TAYLOR
Schapp & Cole
ATTORNEYS

Dec. 16, 1941. J. F. MALSBARY ET AL 2,266,125

PUMP

Filed Feb. 10, 1939 2 Sheets-Sheet 2

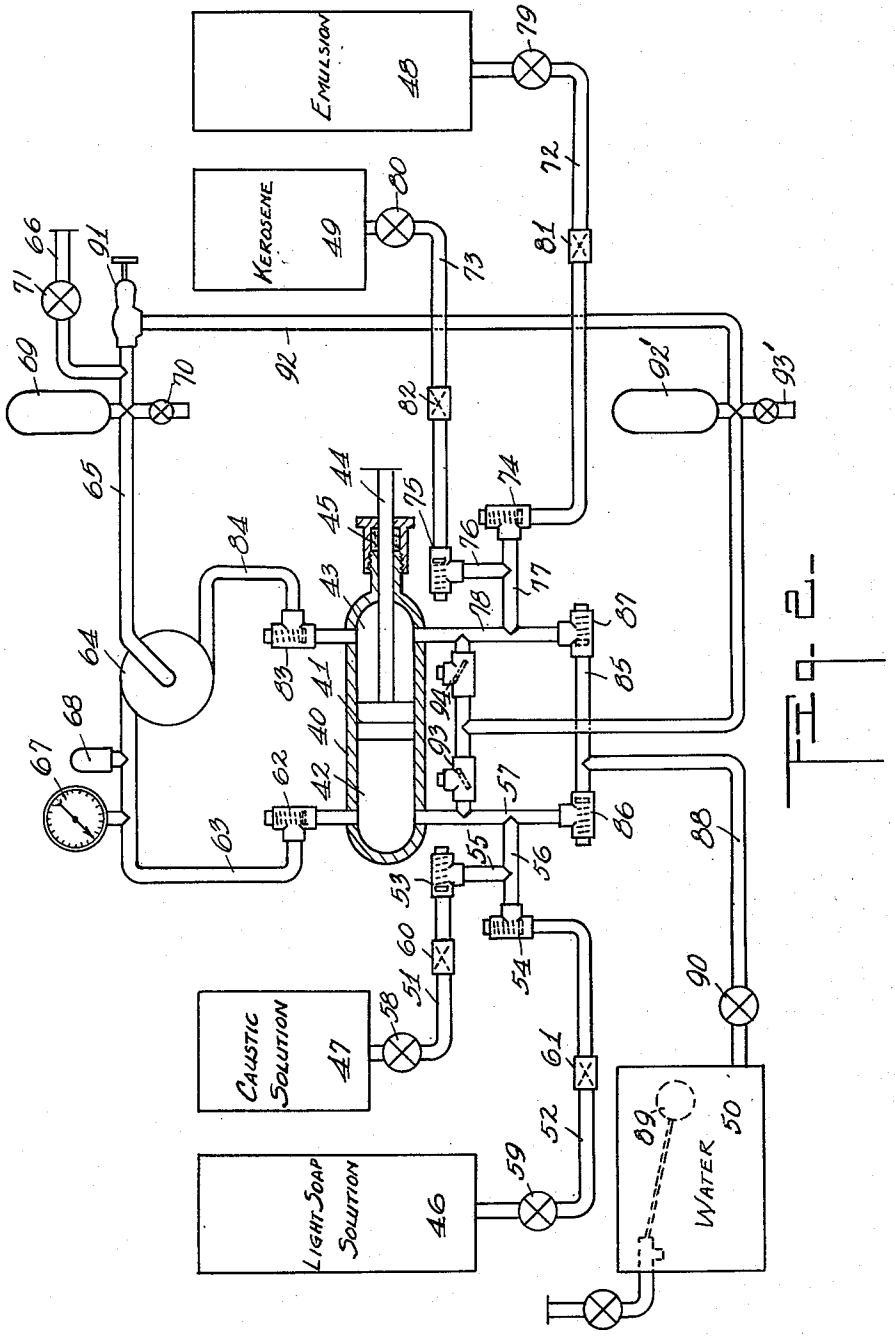

Fig. 2.

INVENTOR
JOB F. MALSBARY
BY WALTER W. TAYLOR.
Chapp & Cole.
ATTORNEYS

Patented Dec. 16, 1941 2,266,125

UNITED STATES PATENT OFFICE

2,266,125

PUMP

Job F. Malsbary and Walter W. Taylor,
Oakland, Calif.

Application February 10, 1939, Serial No. 255,636

10 Claims. (Cl. 259—95)

The present invention relates to improvements in pumps and its principal object is to provide a pump which allows a plurality of liquids coming from different sources to be drawn into the pump separately so that they do not actually mix until they get into the pump.

Our pump is particularly intended for use in connection with cleaning machines for motor vehicles or the like in which a liquid compound is pumped in a dilute form, which may be one pound of cleansing material to fifty gallons of water, usually under high pressure, through a heating coil and a nozzle from which the compound is ejected in the form of a spray which may be of different characteristics depending upon the results desired and suitable adjustment of various contributing factors.

Heretofore it has been customary to mix the various liquids with different materials that form the compound before they pass through one single intake valve of the pump, either in a mixing tank or by feeding from different sources of supply into a common conduit leading to the intake valve of the pump.

Certain compounds, desirable for use in connection with apparatus of the type, when thus mixed to a dilute condition prior to their passing through the inlet valve, have a gumming effect created on the surfaces of the valve and seat which tends to seal shut the intake valve, thereby rendering the pump ineffective or inoperative because the vacuum created on the suction stroke of the pump is insufficient to pull the valve free from its seat.

This effect is not so noticeable in connection with the delivery valve because the high pressure available in the pump renders this factor negligible. The vacuum formed by liquid pump suction is a maximum of 14.7 pounds per square inch to act on the valve area for opening the valve. If the inlet valve does not open, the pump will not fill with liquid.

Referring to the mixture of liquids to be pumped out of the pump, it should be, for practical purposes, diluted to a strength of one pound of cleaning compound to fifty gallons of water. It should be understood that some of the materials referred to in various supply tanks do not form a gumming substance on the intake valve seats when pumped.

Certain new improved developements in the cleaning compound industry are made up of materials that clean surfaces very rapidly and tend to make the cleaning gun operate smoothly and to smother out obnoxious odors of other cleaning agents. But the method of application has been uncertain and troublesome. Therefore the herein described method of use has been developed to create economical and dependable methods of using these products.

We have discovered that a more concentrated mixture of say, one pound of cleaning compound to ten gallons of water has a dissolving and softening effect on the material that passes through the inlet valve seats, thereby preventing the valve from sticking to the seat.

To get this concentrated solution into the pump through the separate intake valve and to make it work satisfactory, we operate as follows:

We provide one separate inlet valve on the pump for this special concentrate solution and a needle control valve in the pipe line between the concentrated solution tank and the solution inlet valve to the pump. Another tank is to supply water to the pump through another inlet valve. The pump will suck a full cylinder of liquid at each stroke of the plunger.

Now we wish to mix some solution in with the water that is going into the pump at each stroke and to make a dilute mixture within the pump. So the needle control valve of the solution is opened a predetermined distance to feed in some of the concentrated liquid.

Assuming, for instance, that we desire a dilute mixture within the pump of a strength of one pound of compound to fifty gallons of water; the pump capacity is fifty gallons per hour; the concentrate solution strength is one pound to ten gallons of water: Then by opening the concentrate solution feed and combining ten gallons of concentrated solution with forty gallons of water we have a dilute mixture of a strength ratio of one pound to fifty gallons of water within the pump. With this combination of mechanism we have a concentrated solution on the seat of the solution intake valve, and plain water on the face of the water intake valve.

Plain water does not make the valve sticky and concentrated solution does not make it sticky. Therefore we have perfect operation of the inlet valves.

The concentrated solution has been specified as one pound of material to ten gallons of water. This degree of concentration has been given for easy demonstration of the principle and as being particularly adapted for our machine. However, we have used a heavier concentrate, up to one pound per gallon of water and a concentrate as thin as one pound to twenty gallons of water with entirely satisfactory results and use through

the pump with the method of individual valves herein described.

With our valve arrangement, we have overcome valve sticking with compounds containing rosins and various acids in addition to various hydro-carbon mixtures. An additional advantage of our arrangement is the fact that wider seats can be used on the surface of the check valves, thereby giving longer useful life to the same and effecting a saving in maintainence expenses. It is apparent that the same principle may be applied to a number of pumps or cylinders placed side by side for convenience or increase of capacity.

The individual liquids in a concentrate form entering the pump through individual valves and entering into the other compounds under consideration do not have the gumming effect on the seat area of the valve, and it is therefore proposed, in the present invention, to feed the individual liquids separately past the area of the intake valve seats before allowing them to mix.

The mixed liquid when re-circulating through the by-pass relief valve within the pump assembly, as hereinafter described, does not come in contact with or pass through the regular intake valve seat area of the pump, because the liquid around the valve seat and valve chamber is self-dissolving or cleansing.

This method of mixing the individual liquids has the further advantage that the individual liquids remain under control of the operator until they enter the pump, with the result that the mixture and its proportions can be changed almost immediately, if desired. It also prevents settling out or separating of certain ingredients of the compound as often happens when the ingredients are mixed in a tank. Since each tank has its own intake valve leading to the pump, the liquids will be prevented from flowing from one tank to another, even if the liquid levels should be different in the tanks.

Then again it happens that the compounds used in connection with the apparatus under discussion, comprise a plurality of constituents, two of which will only mix with the rest of them after they have first been mixed with one another, and it is a further object of our invention to provide a pump in which a plurality of ingredients are treated in such a manner that certain sub-groups are first mixed individually while passing through the pump and that the sub-groups are compounded and intermixed after passing through the pump.

In other cases again, as in orchard sprays, it happens that certain solutions do not remain mixed on account of different specific gravities, or that it is desired to pump small amounts of a solution into the water line for spraying trees.

In certain compounds some of the ingredients are harmful to certain parts of the pump, as for instance, the packing in a double-acting pump, whereas other may be beneficial, and it is a still further object of our invention to provide means for permitting such ingredients to pass through the pump in different and separate paths, whereby the harmful ingredients are kept from contact with sensitive parts of the pump and beneficial ingredients are made available for such parts, as lubricant, for instance.

It is further proposed to combine with the features set forth, means for re-circulating a part or all of the compound through the pump, as a pressure relief means or during idling periods, or for the purpose of more thoroughly mixing the ingredients. When the liquid is thus re-circulated and none is withdrawn into the system, it prevents any further intake from any of the supply tanks, and the re-circulated liquid is prevented from mixing with or back-flowing into the supply tanks.

Further objects and advantages of our invention will appear as the specification proceeds.

The preferred forms of our invention are illustrated in the accompanying drawings, in which:

Figure 1 shows a diagrammatic view in side elevation of one form of our pump, and

Figure 2, a diagrammatic view, partly in elevation and partly in section, of a modified form of the invention.

While we have shown only the preferred forms of our invention, we wish to have it understood that various changes or modifications may be made within the scope of the claims hereto attached, without departing from the spirit of the invention.

In Figure 1 our invention is disclosed in connection with a conventional reciprocating pump of the single action type. The pump 1 is shown as comprising a horizontally disposed pump cylinder 2 supported on standards 3 and having a piston 4 reciprocable therein to form a suction and compression chamber 5. The piston may be reciprocated in any suitable manner, as by a motor 6 resting on the platform 7 and connected, by a belt 8, with the fly wheel 10 mounted on a shaft 11 supported in the pump housing and connected with the piston through a crank 12 and connecting rod 13.

The front wall 14 of the pump is made in the form of a manifold and is provided with a delivery valve 15 of any suitable type and a series of intake valves, here shown as three and numbered 16, 17 and 18, respectively. The latter valves are preferably slightly spaced from the intake manifold and are connected thereto by short pipes 19. This construction keeps the valves, which include, of course, conventional valve seats and movable closures for the same, well out of contact with the general flow of the liquid through the manifold and the pump chamber, so that each valve and valve seat is subjected only to the influence of the particular liquid fed through the same.

The valves 16, 17 and 18 are connected, through the pipes 20, 21 and 22 with three sources of liquid, here shown in tanks 23, 24 and 25, which, for the purposes of illustration have been marked as containing kerosene or emulsion, a soap solution and water, respectively.

Each of the pipes 20, 21 and 22 is provided with a suitable control valve 26, 27 and 28, and also with a suitable orifice 29, 30, and 31 for positively limiting the port area of each pipe in case the valves 26, 27 and 28 should be opened too far.

The outlet valve 15 connects, through pipe 32 and air dome 33, with the pipe 34 leading to the system in connection with which the pump is used, such as the coil of a heating means for final discharge through a suitable spray nozzle (not shown). A suitable pressure gauge 34' is provided on the pipe 32 and a suitable shut-off valve 35 in the pipe 34. The pipe 32 is preferably provided with a safety relief valve 32' and the air dome 33 may have a drain valve 33' attached thereto.

A suitable pressure relief valve 36, subject to manual control is provided in connection with

the pipe 32, and its outlet connects, through pipe 37, with the intake manifold of the pump, a suitable intake valve being provided at 38. The pipe 37 thus forms a by-pass whereby a portion or all of the liquid ejected from the pump may be re-circulated therethrough, depending upon the setting of the relief valve. An air dome 37' is provided in the by-pass pipe 37 to accommodate excess liquid during the pressure stroke of the pump.

In case the system is shut off completely, as by closing the valve 35, all the liquid will continue to re-circulate and no further liquid will be withdrawn from the tank until liquid is drawn away from the pump and the system resumes absorption of liquids from the supply tanks.

The three tanks 23, 24, and 25 have been marked, by way of example, as containing kerosene or emulsion, a soap solution and water, respectively. When these three ingredients are mixed before reaching the pump and are made to pass through a single valve as a mixture, they tend to gum and clog the intake valve. Where they are fed through individual valves, as in the apparatus in Figure 1, they do not have a tendency to gum or clog the valves.

As a rule all three intake valves are active at one time and only one outlet is used. It should be possible, however, to operate any one of the three valves, or any two of them, and therefore, the port area of each of the three intake valves should compare with the port area of the outlet valve for producing an efficient and well balanced unit.

In Figure 2 a double-acting pump is used to solve some related and additional problems. In this pump the piston 41 divides the pump housing into two suction and compression chambers 42 and 43 and is actuated for reciprocating motion by a rectilinearly moving rod 44 passing through a packing 45. It will be noted that only one of the chambers has a packing while the end of the other chamber is closed.

In this apparatus five different tanks 46—50 or other sources of supply are shown as containing, by way of example, a light soap solution, a caustic solution, kerosene, emulsion and water, all five of which are to be mixed in the final spray. But two problems offer themselves: firstly, the caustic soap would be harmful to the packing, whereas the kerosene serves as a lubricant and would be rather beneficial; and secondly, the kerosene will not readily mix with the caustic and soap solutions unless it has first been mixed with the emulsion.

The pump of Figure 2 takes care of this situation by causing the kerosene and the emulsion to first mix and then enter the chamber 43 containing the packing and by causing the caustic and soap solutions to first mix and then enter the other pump chamber 42 containing no packing. Water from the tank 50 enters freely through wide open valves into both of the chambers to insure a complete filling of the pump chambers on each piston stroke. On leaving the pump chambers both mixtures are brought together and are thoroughly intermixed for making the final compound outside the pump.

This is accomplished by the following arrangement:

The tanks 46 and 47 are connected, through pipes 51 and 52, with intake valves 53 and 54 connecting, through pipes 55 and 56 with a manifold 57 which leads to the pump chamber 42. The pipes 51 and 52 are provided with suitable control valves 58 and 59 and with restriction orifices 60 and 61. The pump chamber 42 discharges, through a delivery valve 62 into the pipe 63 which empties tangentially into a cylindrical mixing chamber 64 having an axial discharge into the pipe 65 connecting with the conduit 66 leading to the system in which the mixture is to be used.

The pipe 63 has a pressure gauge 67 and a high pressure safety relief valve 68. The pipe 65 is provided with an air dome 69 having a drain valve 70, and the conduit 66 is controlled by a suitable valve 71.

The tanks 48 and 49 are connected, through pipes 72 and 73 with the intake valves 74 and 75 leading, through pipes 76 and 77 to the manifold 78 discharging into the pump chamber 43. The pipes 72 and 73 are provided with suitable valves 79 and 80 and restricted orifices 81 and 82. The pump chamber 43 discharges through the delivery valve 83 and the pipe 84 into the mixing chamber 64 in a tangential direction for thorough mixing with the discharge from the other pump chamber and for final discharge into the conduit 66 as previously described.

The two manifolds 57 and 78 are interconnected through a pipe 85 having two intake valves 86 and 87 leading to the respective pump chambers, and the pipe 85 connects, through pipe 88, with the water supply tank 50 having a suitable float control as at 89. A valve 90 controls the pipe 88. Thus water is always available in ample supply for both pump chambers, the intention being to insure complete filling of the pump chambers at all times, while at the same time carefully controlling the other ingredients.

The final discharge pipe 65 is connected, through a pressure relief valve 91 with a by-pass 92 which leads, through intake valves 93 and 94 to the respective manifolds 57 and 78 and the pump chambers 42 and 43. The by-pass is provided with an air dome 92' and a drain valve 93' for the same.

The valve 91 is subject to control so that any desired portion or all of the liquid mixture may be re-circulated through the pump for further mixing or through idling periods.

It is apparent that, with valve 71 closed, all the liquid will re-circulate through the by-pass and no new liquid will be withdrawn from any of the tanks.

It also appears that all the intake valves for the separate tanks are remote from the re-circulating path so that the valves remain unaffected by the re-circulated mixture.

We claim:

1. A pump having a pump chamber, including an intake manifold forming part thereof, pumping means in the chamber, intake conduits for feeding liquids into the manifold at spaced points and including intake valves, whereby the liquids are mixed in the manifold and pump chamber, a delivery conduit connected to the manifold at a point spaced from the intake conduits, the delivery conduit having a discharge valve therein, a by-pass connecting the delivery conduit with the manifold at a point opposite the delivery valve, the intake conduits being connected to the manifold between the delivery conduit and the returning end of the by-pass, whereby the return flow of liquid is directed through the manifold and across the intake conduit to set up a general agitation in the manifold and chamber, and control means in the by-pass for regulating the by-passing of pumped liquids back to the manifold.

2. A reciprocating pump for delivering a gumming solution having non-gumming constituents, comprising a pump housing, a piston reciprocating therein, separate suction operated intake valves having direct and unrestricted communication with the pump housing, a delivery port having a pressure-operated valve, means for feeding one constituent of the solution through one of the valves and means for separately feeding another constituent through another valve, whereby the intake valves are prevented from gumming and from becoming non-responsive to the suction of the pump.

3. A reciprocating pump for delivering a gumming solution having less adhesive constituents, comprising a pump housing, a piston reciprocating therein, separate suction-operated intake valves having direct and unrestricted communication with the pump housing, a delivery port having a pressure-operated valve, means for feeding one constituent of the solution through one of the valves and means for separately feeding another constituent through another valve, whereby the intake valves are prevented from gumming and from bcoming non-responsive to the suction of the pump and means acting under the pressure of the pump for injecting pump discharge into the constituents after they have been sucked through the intake valves for stirring and mixing the said constituents.

4. A reciprocating pump for delivering a gumming solution having non-gumming constituents, comprising a pump housing, a piston reciprocating therein, separate suction-operated intake valves having direct and unrestricted communication with the pump housing, a delivery port having a pressure-operated valve, means for feeding one constituent of the solution through one of the valves and means for separately feeding another constituent through another valve, whereby the intake valves are prevented from gumming and from becoming non-responsive to the suction of the pump, and means acting under the pressure of the pump for injecting pump discharge into the constituents after they have been sucked through the intake valves for stirring and mixing the said constituents and manually-actuated means for controlling the latter means.

5. A reciprocating pump for delivering a gumming solution having non-gumming constituents, comprising a pump housing, a piston reciprocating therein, separate suction-operated intake valves having direct and unrestricted communication with the pump housing, a delivery port having a pressure-operated valve, means for feeding one constituent of the solution through one of the valves and means for separately feeding another constituent through another valve, whereby the intake valves are prevented from gumming and from becoming non-responsive to the suction of the pump and means for by-passing a portion of the pumped solution for recirculation through the pump, the intake valves being mounted remote from the path of the recirculating solution so as to remain unaffected by the gumming character thereof.

6. A pump comprising a pump housing, a piston reciprocable therein, at least two separate intake valves having direct and unrestricted communication with the pump housing and a delivery valve, two tanks having conduits leading to the intake valves and being mounted to deliver liquids thereto in separate paths by gravity, the intake valves being arranged to open on the suction stroke and to close on the delivery stroke of the piston and to automatically close when the pump is idle so as to prevent flow of liquid from one tank into the other during periods of rest.

7. A pump comprising a pump chamber having at least two inlets drawing on different sources of liquid supply and an outlet, separate suction-operated intake valves in said inlets having direct and unrestricted communication with the pump chamber, means for drawing the liquids into the chamber for mixing and for ejecting them through the outlet under pressure, and means for guiding ejected liquid back in the pump chamber under pump pressure and out of contact with the intake valve for aiding the mixing of the liquids entering through the inlets from the different sources of supply.

8. A pump comprising a pump chamber having an intake and an outlet, means for forcing liquid through the chamber for discharge through the outlet under pressure, a conduit connected to the outlet and having two branch conduits connected thereto, one of said branch conduits being a working conduit and the other branch conduit leading back to the pump chamber for causing liquid passing through said conduit to re-enter into the liquids passing through the pump chamber under pump pressure and a pressure-relief valve arranged to control the pressure in the working branch conduit and to divert excess pressure into the return branch conduit, the pressure relief valve having manually-operated means for adjusting the same to bring about desired pressures in the working branch conduit.

9. A reciprocating pump for delivering a gumming solution having non-gumming constituents, comprising a pump housing, a piston reciprocating therein, separate suction-operated intake valves having direct and unrestricted communication with the pump housing, a delivery port having a pressure-operated valve, means for feeding one constituent of the solution through one of the intake valves and means for separately feeding another constituent through another intake valve for mixing the constituents within the pump housing, each intake valve having an individual conduit leadng to and separating the same from the pump housing so that the individual constituents sucked into the said conduit forms a bar for preventing the mixed solution from coming into contact with its respective intake valve.

10. A pump having a pump chamber, including an intake manifold, pumping means in the chamber, intake conduits for feeding liquids into the manifold at spaced points and including intake valves whereby the lquids are mixed in the manifold and the pump chamber, a delivery conduit for the pump chamber located at a point spaced from the intake conduits, the delivery conduit having a discharge valve therein and a by-pass connecting the delivery with the manifold whereby the return flow of liquid is directed through the manifold to set up a general agitation in the manifold and chamber, and control means in the by-pass for regulating the by-passing of pumped liquids back to the manifold.

JOB F. MALSBARY.
WALTER W. TAYLOR.