July 4, 1933. C. A. DE GIERS 1,916,717

SAFETY ELECTRIC SWITCH

Filed Aug. 21, 1930 3 Sheets-Sheet 1

FIG.1.

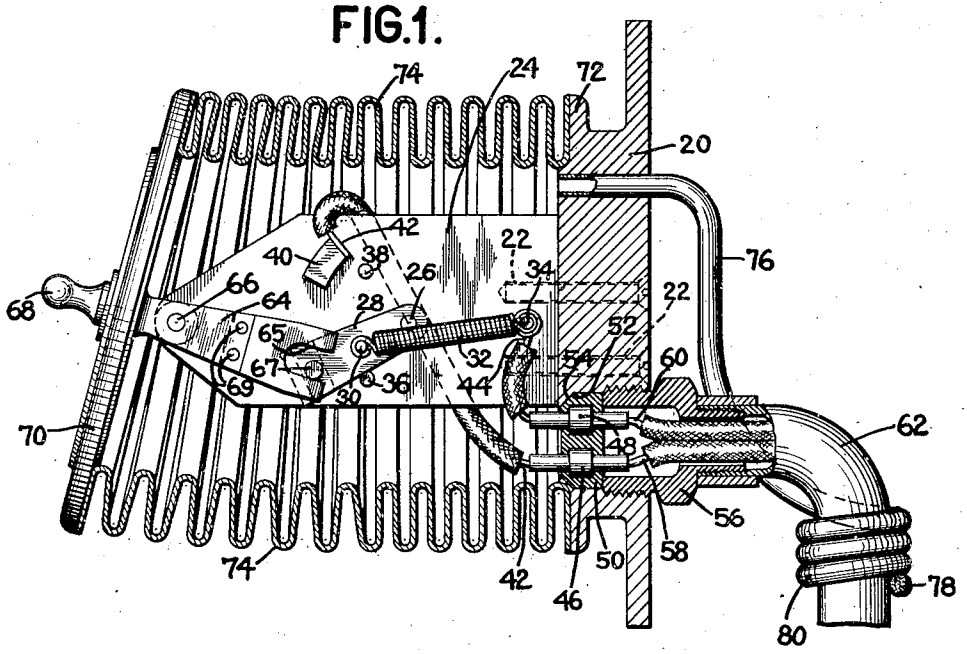

FIG.2.

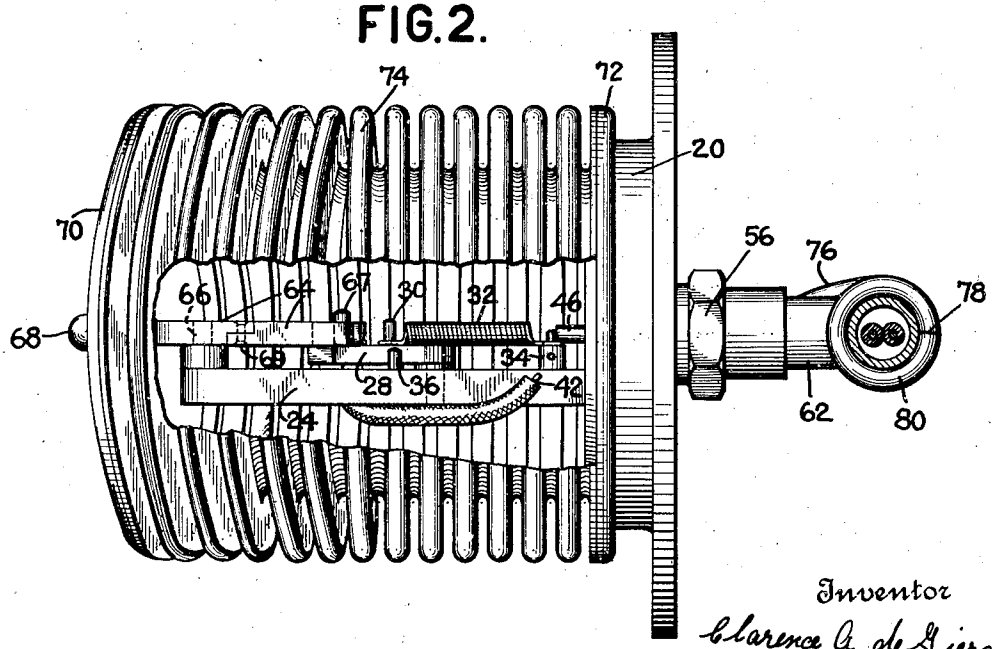

Inventor
Clarence A. de Giers
By his Attorneys
Cooper, Kerr & Dunham

July 4, 1933. C. A. DE GIERS 1,916,717

SAFETY ELECTRIC SWITCH

Filed Aug. 21, 1930 3 Sheets-Sheet 2

FIG. 3.

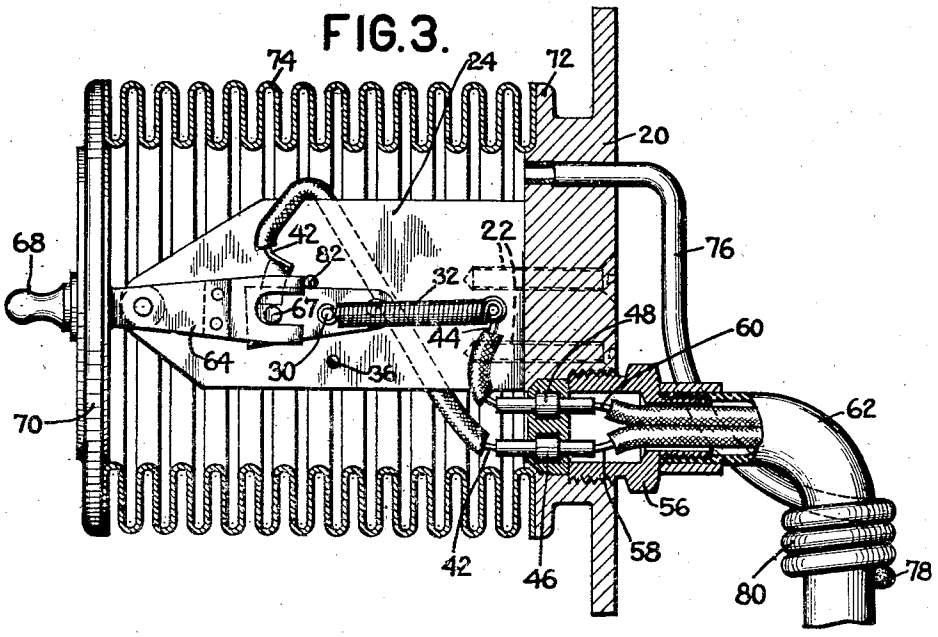

FIG. 4.

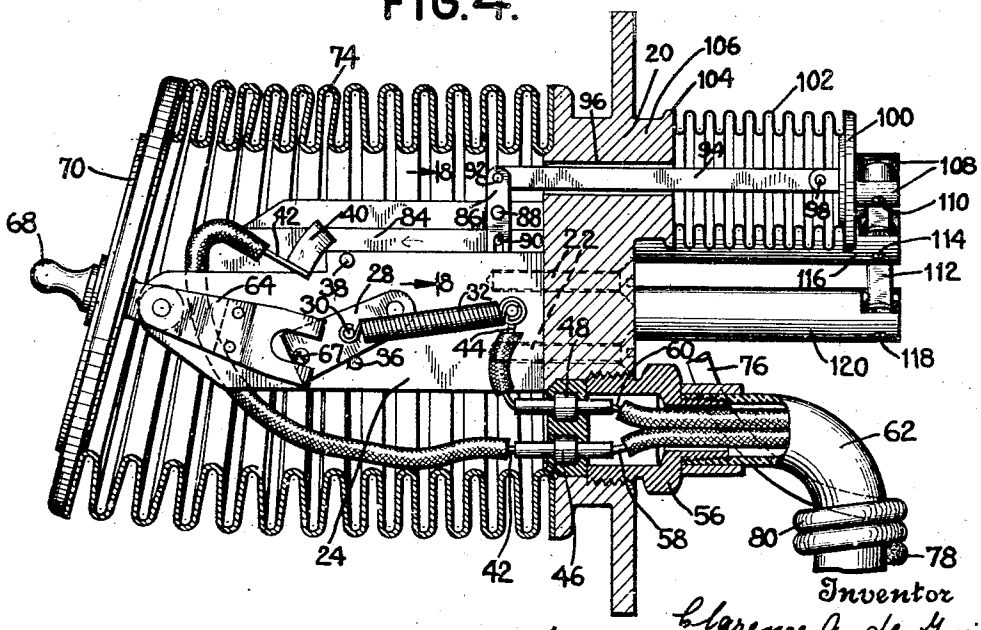

Inventor
Clarence A. de Giers
By his Attorneys
Cooper, Kerr & Dunham

July 4, 1933. C. A. DE GIERS 1,916,717

SAFETY ELECTRIC SWITCH

Filed Aug. 21, 1930 3 Sheets-Sheet 3

FIG.5.

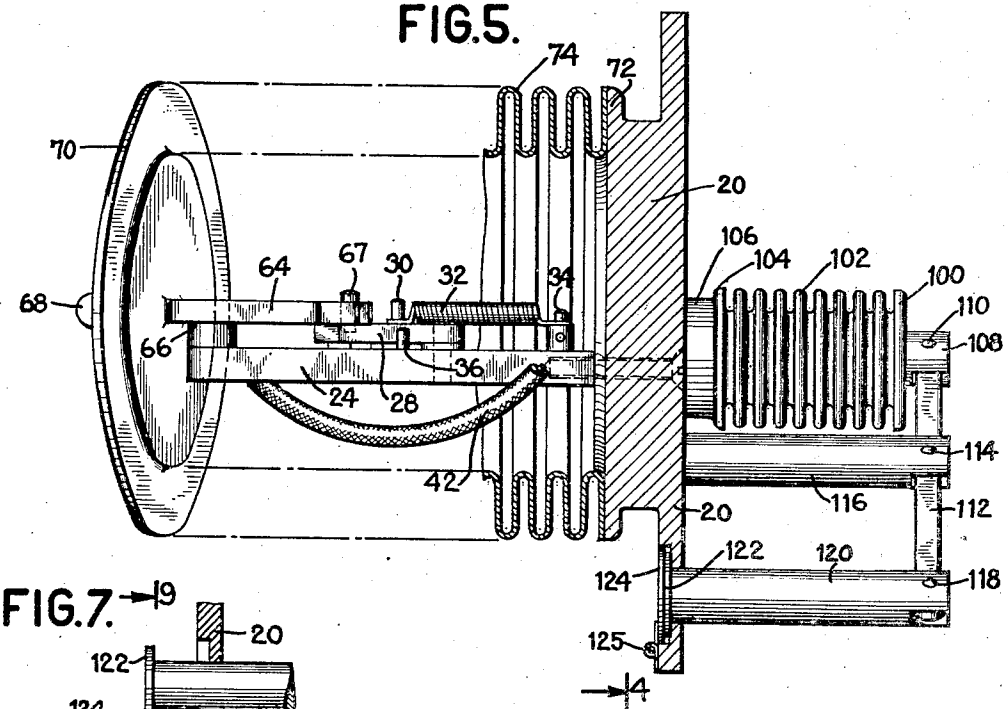

FIG.7.

FIG.8.

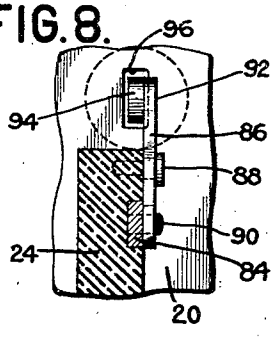

FIG.9.

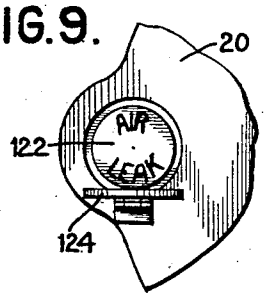

FIG.6.

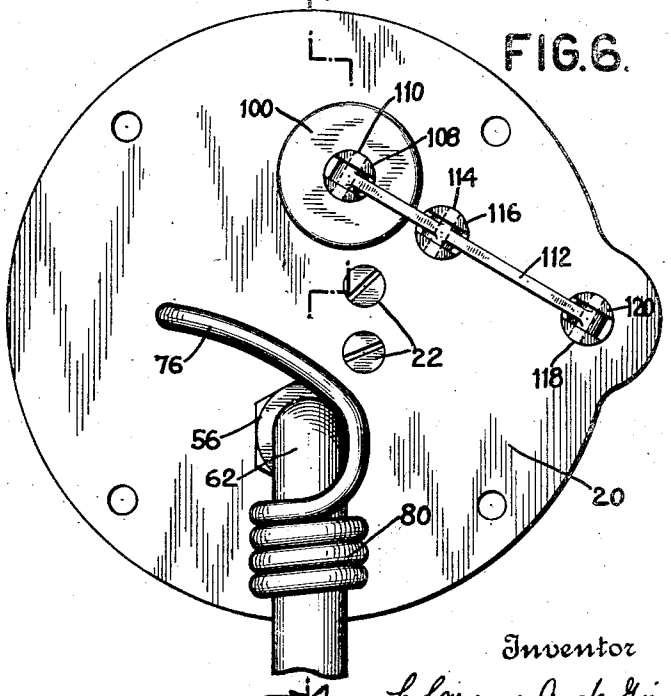

Inventor
Clarence A. de Giers
By his Attorneys
Cooper, Kerr & Dunham

Patented July 4, 1933 1,916,717

UNITED STATES PATENT OFFICE

CLARENCE A. DE GIERS, OF FOREST HILLS, NEW YORK, ASSIGNOR TO THE LIQUIDOMETER CORPORATION, OF LONG ISLAND CITY, NEW YORK, A CORPORATION OF DELAWARE

SAFETY ELECTRIC SWITCH

Application filed August 21, 1930. Serial No. 476,801.

The principal object of the present invention is to provide an electric switch so designed as to be operable in any position and to eliminate all danger of sparks passing therefrom to the surrounding atmosphere or other medium in which the switch may be placed.

In locations such as hydrogen-filled air ships it is of the utmost importance that sparks be prevented, and the present switch is particularly adapted for use under such conditions.

Further and other objects of the invention will be apparent from the specification and claims, and from the acompanying drawings which illustrate what is now considered to be the preferred embodiment of the invention.

Fig. 1 is a cross-section of the device showing the switch in "off" position.

Fig. 2 is a view of Fig. 1 from the bottom, with parts broken away.

Fig. 3 is a modification of Fig. 1 with switch in "on" position.

Fig. 4 is a cross-section of a switch similar to Fig. 1 with the addition of a safety device, the view being taken on the line 4—4 of Fig. 6.

Fig. 5 is a view of Fig. 4 from the bottom, with portions partly broken away.

Fig. 6 is a view of Fig. 4 from the right end thereof.

Fig. 7 is a fragmentary view showing a detail of Fig. 5 in a different position.

Fig. 8 is an enlarged detail on the line 8—8 of Fig. 4.

Fig. 9 is a view on the line 9—9 of Fig. 7.

Referring to the drawings, the device comprises a flanged metallic base plate 20 to which is secured by screws 22 a projecting plate 24 of insulating material such as bakelite. On plate 24, at 26, is pivoted a metallic switch blade 28. Attached to metallic pin 30 on blade 28 is a tension spring 32 having its other end anchored to metallic pin 34 on plate 24. As shown in Fig. 1 the spring is holding blade 28 in non-operative position against stop pin 36 fast in plate 24. When blade 28 is moved upwardly against stop pin 38 the blade passes the center line and is held in that position by the same spring.

While in raised position blade 28 contacts with conductor button 40, fast on plate 28. To button 40 is soldered an end of conductor wire 42. An end of another conductor wire 44 is fast to pin 34; therefore, when blade 28 is in contact with button 40 a circuit is closed through wire 42, button 40, blade 28, pin 30, spring 32, pin 34, and wire 44.

Wires 42 and 44 are soldered into terminals 46 and 48 respectively, and the terminals are embedded in a bakelite plug 50 provided with a conical face 52 adapted to fit a conical seat 54 in base plate 20. Plug 50 is held in above operative position by hollow locking screw 56, through which pass wires 58 and 60 soldered to the outer ends of terminals 46 and 48 respectively. These wires pass through conduit 62 to the source of current. It will be appreciated that the above described arrangement provides current paths through base plate 20 while preventing leakage of fluid such as air, hydrogen, etc., through the plate.

Blade 28 is movable by lever 64 having a jaw 65 engaging a pin 67 on blade 28, said blade being pivoted at 66 on plate 24 and provided with a knob 68 for manual operation. Jaw 65 is formed in insulating material and attached to lever 64 as by rivets 69.

Integral with lever 64 is a disk or head 70, and interconnecting the rim of head 70 to a rim 72 on base plate 20 is a flexible sylphon 74. The sylphon is soldered or brazed to rims 70 and 72 to form gas-tight joints therewith.

After the switch mechanism is assembled as above described, the air is exhausted from the chamber formed by head 70, plate 20 and sylphon 74, through tube 76, which passes through plate 20 and is soldered thereto. After the air is exhausted the free end of tube 76 is soldered as at 78 and any excess tubing is coiled around the conduit as at 80. The flexibility of sylphon 74 permits free operation of the switch by knob 68 and lever 64 without breaking the vacuum within the switch chamber; therefore, there is no opportunity for sparks generated by the switch to

be communicated to the medium surrounding the switch chamber.

In the switch illustrated in Figs. 1 and 4, blade 28 is held in "on" or "off" position by spring 32, whereas in the modification shown in Fig. 3, upper stop pin 38 is replaced by a pin 82 so placed that blade 28 cannot pass above the center line; therefore, in that modification, the switch will remain in "on" position only when held there by the operator, and is immediately drawn to "off" position against pin 36 when the operator releases knob 68.

In case there is any leakage of surrounding gas or air into the switch chamber there is no danger of flame or spark propagation outwardly from the switch chamber until the inside and outside pressures are equalized. Nevertheless it is important that the switch be rendered inoperative and the operator be informed promptly whenever leakage has occurred, and for those purposes I provide the devices shown in Figs. 4 to 9, inclusive, which will now be described.

In this modification, contact button 40, instead of being fast on non-conducting plate 24, is fast on a bakelite slide 84 movable longitudinally in a slot in plate 24. Wire 42 is fast to slide 84, therefore when the parts are in normal position as in Fig. 4, and blade 28 is up against stop 38, a circuit is closed from wire 42 through slide 84, button 40, and so on as in Fig. 1, to wire 44. If, however, slide 84 is moved to the left sufficiently, button 40 will be out of reach of blade 28 and no contact, and consequently no spark, can be made therebetween.

Slide 84 is movable by a first-order lever 86, pivoted at 88 on plate 24, engaging pin 90 on the slide, and connected at its upper end by pin 92 to horizontal link 94 which passes through a clearance hole 96 in base plate 20 to engage at 98 a disk or head 100, the rim of which is connected by an axially compressed sylphon 102 to the rim 104 of boss 106 on plate 20, thus forming a gas tight chamber in communication with the switch chamber.

On the outside of head 100 is a jaw member 108 through which a pin 110 pivotally engages one end of a lever 112 fulcrumed on pin 114 in the end of stud 116 set into base plate 20. The other end of lever 112 is pivotally connected by pin 118 to an end of plunger 120, on the other end of which is a disk 122, lettered for instance as in Fig. 9 and normally concealed from the sight of the operator (as in Fig. 5) by a shutter 124 hinged by spring hinge 125 on plate 20.

Under normal conditions, the switch chamber and sylphon 102 being under vacuum, disk 122 is held tightly against its seat in plate 20 by atmospheric pressure against the outside of head 100 which is sufficient to overcome any tendency of sylphon 102 to expand axially.

If, however, gas is permitted to enter the structure, to break the vacuum therein, sylphon 102 will expand axially, moving slide 84 to the left to place button 40 beyond reach of blade 28 and moving plunger 120 also to the left, whereby shutter 124 and disk 122 assume the positions shown in Figs. 7 and 9, thus simultaneously putting the switch out of commission and advising the operator why it is out of commission.

It is to be understood that the invention is not limited to the specific construction herein described and illustrated, but may be used in other ways without departure from its spirit as defined by the following claims.

I claim—

1. In an electric switch, a vacuum chamber, a contact button and a contact blade in said chamber, means for deforming said chamber whereby said blade is moved into or out of contact with said button, and means for automatically preventing said blade and said button from contacting when the vacuum in the chamber is broken.

2. In an electric switch, a vacuum chamber, a contact button and a contact blade in said chamber, means for deforming said chamber whereby said blade is moved into or out of contact with said button, and means for automatically moving said button out of the path of travel of said blade when the vacuum in said chamber is impaired.

3. In an electric switch, a vacuum chamber, a contact button slidably mounted in said chamber, a blade manually movable into contact with said button, in combination with means responsive to increase of pressure within said chamber for sliding said button out of reach of said blade to render the switch inoperative.

4. In an electric switch, a vacuum chamber, a contact button slidably mounted in said chamber, a blade manually movable into contact with said button, in combination with means responsive to increase of pressure within said chamber for sliding said button out of reach of said blade to render the switch inoperative, said means being effective for simultaneously displaying a signal to advise the operator that the switch is inoperative.

5. In an electric switch, a vacuum chamber, a contact button, and a contact blade in said chamber, an auxiliary vacuum chamber in commuication with said contact chamber, said auxiliary chamber comprising a sylphon having a head, in combination with instrumentalities interconnecting said head and said button whereby movement of said head will move said button to render the switch inoperative.

6. In an electric switch, a vacuum chamber, a contact button and a contact blade in said chamber, an auxiliary vacuum chamber in communication with said contact chamber, said auxiliary chamber comprising a sylphon having a head, in combination with instru-

mentalities interconnecting said head and said button whereby movement of said head will move said button to render the switch inoperative, said head being movable in response to increase of pressure in said contact chamber.

7. In an electric switch, a vacuum chamber, a contact button and a contact blade in said chamber, an auxiliary vacuum chamber in communication with said contact chamber, said auxiliary chamber comprising a sylphon having a head, a signal normally concealed from the operator, in combination with instrumentalities interconnecting said head with said button and with said signal whereby an increase of pressure in said contact chamber will render said switch inoperative and simultaneously display said signal to the operator.

8. In an electric switch, a vacuum chamber comprising a sylphon, a stationary support within said sylphon, stationary and movable switch elements mounted on said support, and a switch operating member hermetically sealed to the sylphon and pivoted on said support for flexing the sylphon laterally to operate the movable switch element and open or close the switch.

9. In an electric switch, a vacuum chamber comprising a sylphon, a support within said sylphon, switch elements mounted on the support, and means connecting the support and the sylphon to preclude longitudinal movement of the sylphon, said means being pivoted upon the support and connected to the switch elements for opening and closing the switch upon lateral flexing of the sylphon.

10. In an electric switch, a base, a vacuum chamber comprising a sylphon hermetically sealed to the base, a support secured to the base and projecting into the sylphon, a head on the sylphon, an operating handle rigidly connected and hermetically sealed to said head, a pivotal connection between said handle and the support and switch elements mounted on the support and operated by the handle.

In testimony whereof I hereto affix my signature.

CLARENCE A. DE GIERS.