United States Patent

Siegel

[15] **3,648,817**

[45] **Mar. 14, 1972**

[54] MAGNETIC SWITCH ASSEMBLY FOR CODING INFORMATION

[72] Inventor: **Martin Siegel,** San Mateo, Calif.

[73] Assignee: **Datel Corporation,** Falls Church, Va.

[22] Filed: **Jan. 21, 1969**

[21] Appl. No.: **792,470**

[52] **U.S. Cl.** **197/19,** 197/98

[51] **Int. Cl.** **B41j 5/30**

[58] **Field of Search** 197/19, 98

[56] **References Cited**

UNITED STATES PATENTS

3,197,618	7/1965	Stanley et al.	197/20 X
3,233,715	2/1966	Flieg	197/19
3,251,962	5/1966	Jones	197/98 X
3,391,774	7/1968	Greer	197/19
3,452,851	7/1969	Holmes	197/19
3,453,379	7/1969	Holmes	197/19 X
3,457,368	7/1969	Houcke	197/98 X
3,269,509	8/1966	Smith	197/20 X

Primary Examiner—Edgar S. Burr
Attorney—John E. Reilly

[57] **ABSTRACT**

The present invention is directed to the improved mounting and disposition of a series of magnetic switching members utilized to convert the characters printed on a keyboard into coded electrical signals, generally wherein each switch is opened or closed in response to movement of each of a selected group of interposers which control printing of each character on the keyboard. Each of the magnetic switch elements is mounted on the back of a circuit board, and a magnetic switch-actuating member for each switch is releasably inserted in the slotted end of a holder which in turn is attached in close-fitting relation to an interposer so that the actuating member is securely but adjustably disposed for movement in response to movement of its interposer in closely spaced parallel relation to a switch.

6 Claims, 5 Drawing Figures

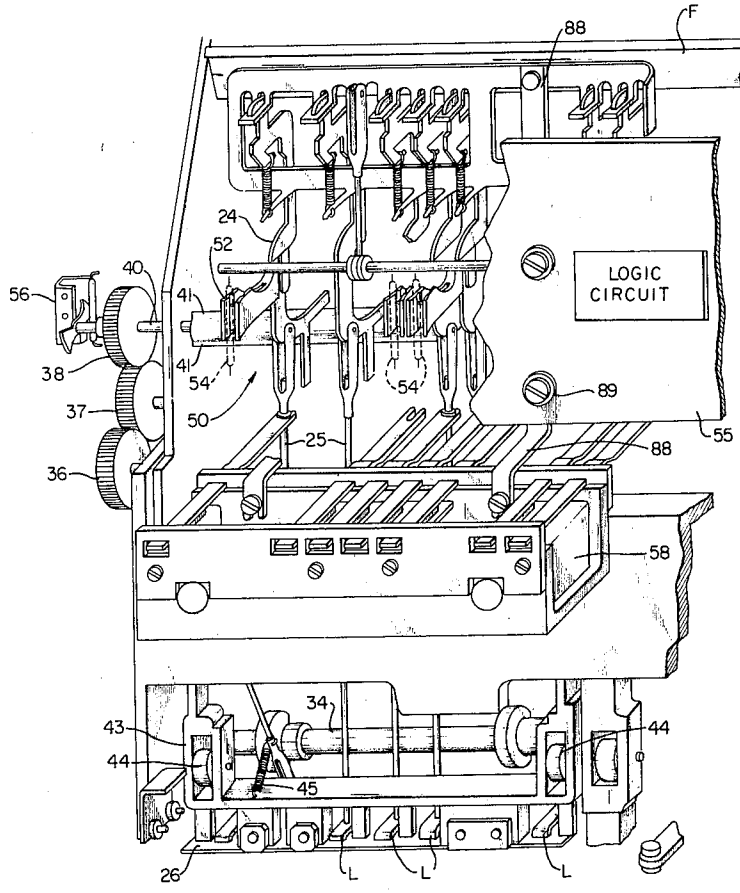

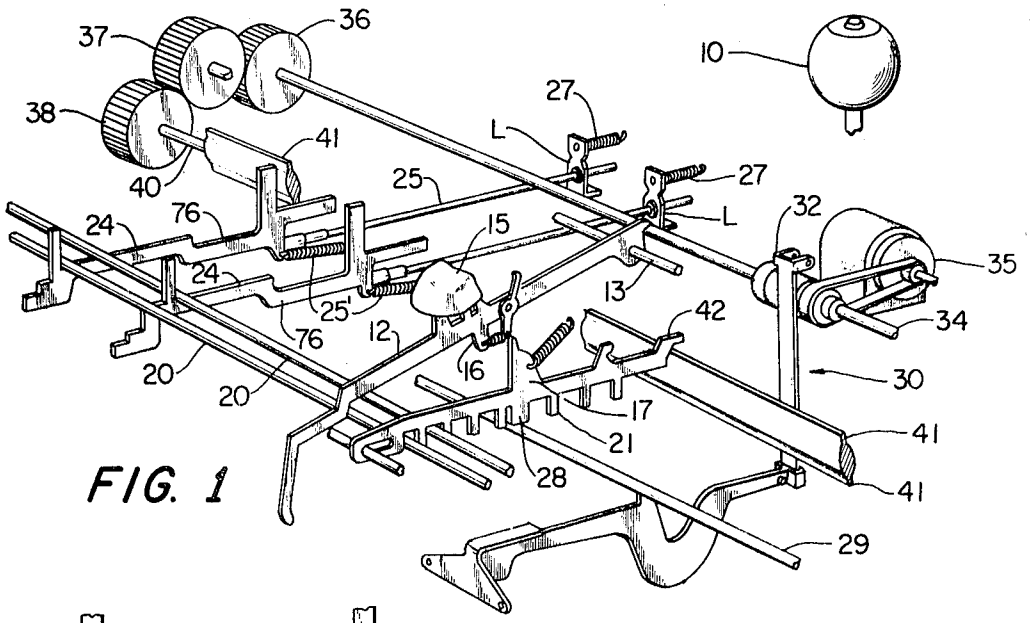

FIG. 1

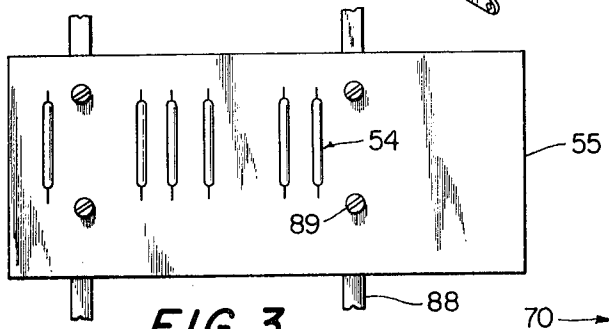

FIG. 3

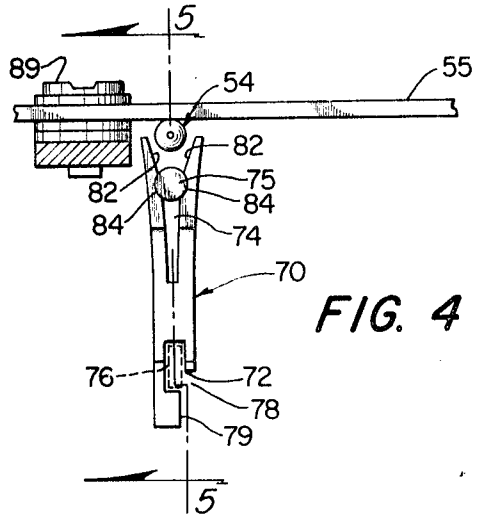

FIG. 4

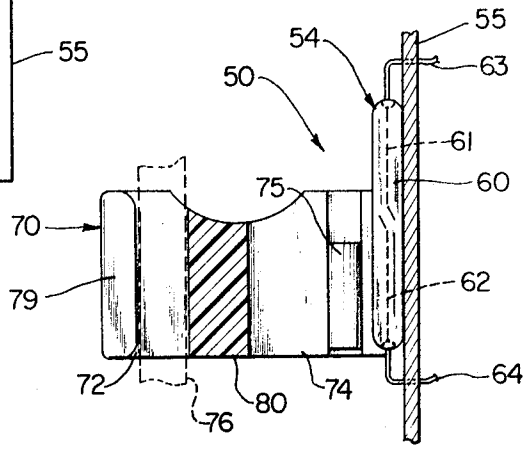

FIG. 5

INVENTOR.
MARTIN SIEGEL

BY John E. Reilly

ATTORNEYS

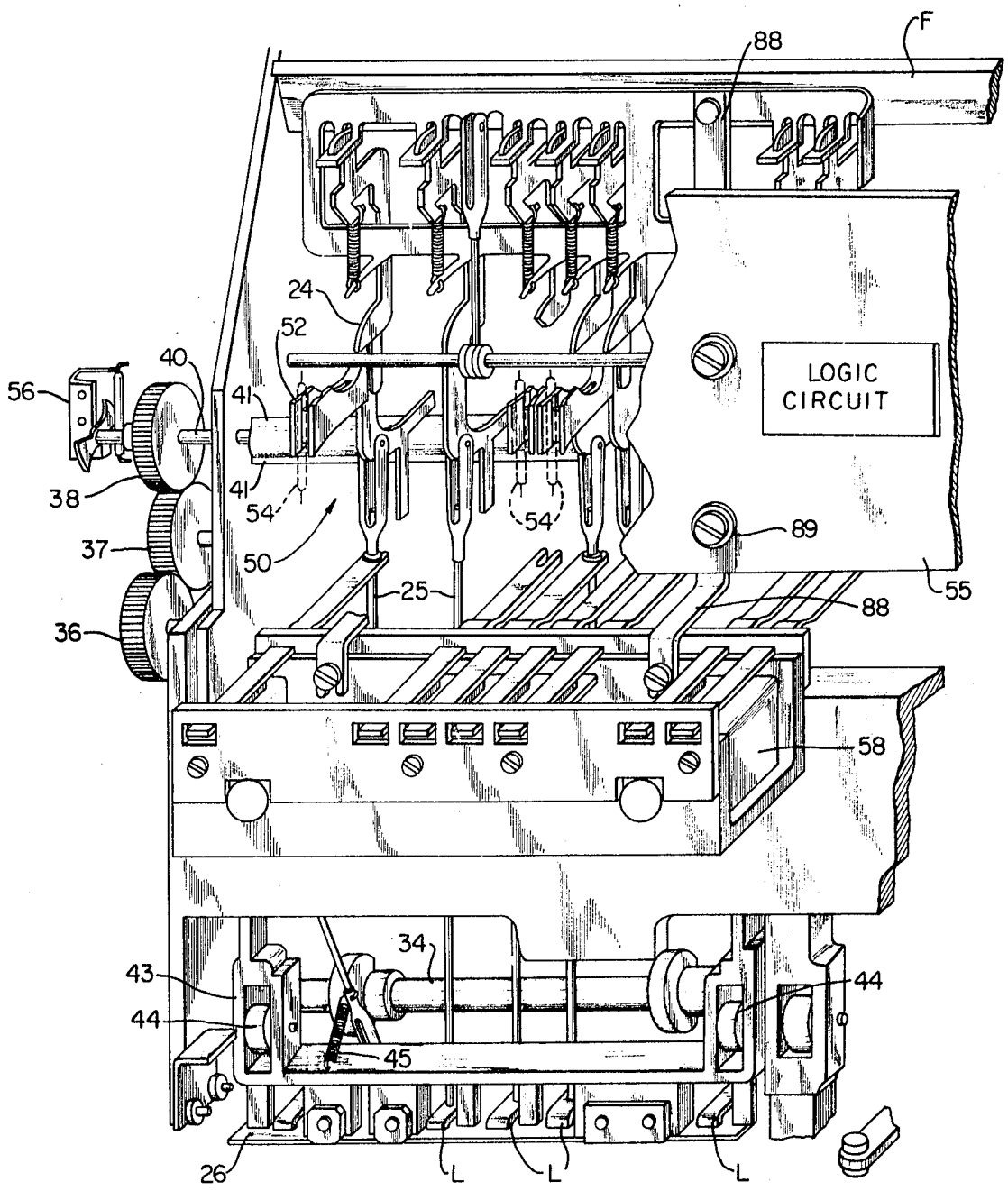

FIG. 2

INVENTOR.
MARTIN SIEGEL
BY
John E Reilly
ATTORNEYS

MAGNETIC SWITCH ASSEMBLY FOR CODING INFORMATION

This invention relates to coding devices for business machines, and more particularly relates to a novel and improved means for converting information as it is typed or printed into coded electrical signals for transmission to a recording unit.

It is customary to convert information as it is printed or typed by a business machine, such as, a keyboard printer unit, into coded electrical signals and signal combinations representative of each item of information printed, recording and signals produced, and thereafter transmitting the signal back to the typewriter for automatically printing the same matter as originally prepared, the objective being of course to provide high speed, reliable reproduction of the information. A typical keyboard printer unit is that generally disclosed and set forth in U.S. Pat. No. 2,919,002 to L. E. Palmer or U.S. Pat. No. 3,260,340 to H. C. Locklar et al., wherein the printer unit is provided with a spherical print head bearing columns and rows of characters, each character being selectively advanced into position for printing by rotation and tilt of the print head in response to actuation of a key lever. The rotation and tilt of the print head are mechanically controlled by a displacement mechanism which is actuated by linkage set in motion by depression of each key lever. The linkage broadly comprises a character interposer movable in response to depression of each key lever to actuate one or more selector bails and latch interposers in predetermined combinations representative of the key or character and which, through a series of selector latches in the displacement mechanism will determine the degree of rotation and tilt of the print head. Thereafter the head is advanced to strike the platen to print the chosen character.

In a similar manner, series of electrical pulses or signals representing each character or item of information may be transmitted back from a remote station, such as, a magnetic tape recording and playback unit to a series of electromagnets or solenoids associated with the latch interposers. Each signal of a combination representing a character will energize a solenoid and, through the latch interposers, will control rotation and tilt of the print head to present the chosen character for printing.

In converting the information into coded electrical signals for recording or other purposes, it is highly desirable to provide an arrangement which is compact, can be quickly and easily installed and is readily conformable and adjustable for use in different types of business machines. In accordance with the present invention, a magnetic switch assembly has been devised which will accomplish the foregoing and in a unique manner will closely and accurately follow movement of the control linkage actuated for printing each character to generate a combination of electrical pulses or signals representative of each character or unit of information.

It is therefore an object of the present invention to provide a novel and improved coding device particularly adaptable for converting characters as they are printed or typed into electrical signals for transmission to another recording unit; and further to provide a device of the character described which is compact and comprises a minimum number of parts so as to permit its mounting and disposition directly between the control linkage and the control circuitry of the printer unit.

It is another object of the present invention to provide a magnetic switch assembly for coding information printed by means of a keyboard printer unit wherein the assembly is readily attachable to and detachable from the printer control linkage and a circuit mounting board so as to be readily conformable for use with different types of typewriter printer units, and can be easily adjusted and serviced once in place; and more specifically to provide a magnetic switch assembly in which a series of switching elements are selectively controlled by a corresponding number of magnetic actuating members adjustably insertable in holders attached to the control linkage to produce coded electrical signals in different combinations representative of each character printed.

It is a still further object of the present invention to provide for a novel and improved magnetic switch assembly wherein reed switch elements are positioned on the back of the printed circuit board, each element to be actuated in direct response to movement of a magnetic actuating member releasably inserted in a holder to follow movement of control linkage members in a printer unit for producing electrical signals or pulses for transmission in combinations representative of each character manually selected for printing.

In the magnetic switch assembly of the present invention, each of a series of magnetically responsive switch elements is mounted on the back of a circuit board in facing relation to each latch interposer or equivalent linkage arm in the keyboard unit which controls movement of the print element. A magnetic actuating member for each of the switch elements is releasably inserted laterally in the forwardly divergent slotted end of a holder projecting from each of the latch interposers toward an aligned switch element. Each holder is connected to an interposer by snap-fitting insertion of the interposer into a recess at the end of the holder opposite to the slotted end. The actuating member is positively held against lateral release but is axially adjustable in the slotted end with the sides of the slotted end flanking the sides of the switch element; and upon movement of the interposer the actuating member will axially advance in closely spaced parallel relation to the switch either to effect opening or closing of the switch. In this way, a selected combination of switches will be actuated when a corresponding combination of interposers is advanced to print a particular character and which actuation may be utilized to generate coded electrical signals for transmission to another station.

The above and other objects, advantages and features of the present invention will become more readily appreciated and understood from a consideration of the following detailed description when taken together with the accompanying drawings, in which:

FIG. 1 is a perspective view illustrating parts of a conventional keyboard printer unit.

FIG. 2 is a perspective view from the underside of the printer unit shown in FIG. 1 illustrating the relative disposition and arrangement of a preferred form of magnetic switch assembly.

FIG. 3 is an elevational view of a series of switching elements mounted on a printed circuit board.

FIG. 4 is a top view in detail of the preferred form of one of the magnetic switches in the switch assembly in accordance with the present invention; and

FIG. 5 is a sectional view taken about line 5—5 of FIG. 4.

Referring in detail to the drawings, in FIG. 1 a conventional printer unit has a spherical print head 10 provided with rows and columns of characters, not shown, to be selectively advanced into position for printing by means of a displacement mechanism which is actuated in response to depression of each of a plurality of key levers, one such key lever being designated at 12 for movement about a shaft 13. Whenever a key lever 12 is depressed by its key button 15, a pawl 16 on key lever 12 engages a character interposer 17 to slidably advance the interposer and in turn to cause movement of selector bails 20, the latter being disposed for engagement by lugs 21 on the character interposer. Each character interposer has a different lug spacing so that different combinations of selector bails are advanced in response to depression of each key lever; and each combination of any one or more of the selector bails so advanced by a key lever is representative of the character displayed on the related key button. Each of the selector bails will control movement of an associated latch interposer 24, and of the latch interposers shown in FIGS. 1 and 2 it will be noted that each has a pivotal rod 25 to control movement of a selector latch, designated L, out of the path of a common actuating bail 26. Each latch interposer is normally urged in a rearward direction by a spring 25', and each selector latch is biased rearwardly into the path of the bail 26 by a spring 27. The actuating bail 26 is caused to be moved

downwardly against those selector latches L not removed from its path by the latch interposers **24**, and those latches engaged will operate through the displacement mechanism to advance the desired character, corresponding to the key lever depressed, into position for printing.

In order to correlate advancement of the actuating bail **26** with movement of the selector latches, each character interposer has a special lug **28** which when depressed will strike a cycle bail **29** forcing the bail **29** to move downwardly and, through suitable control linkage represented at **30**, actuate a clutch member **32** for rotation of a cycle shaft **34** by motor drive **35**. In each print cycle, the cycle shaft will rotate 180° and through gearing **36**, **37** and **38** is operative to rotate a filter shaft **40** through 180°. The filter shaft **40** has diametrically opposed blades **41** positioned beneath the character interposer so that in each 180° print cycle a blade on the filter shaft is engageable with the shoulder **42** on the character interposer to advance the latter in a direction to engage and move one or more of the selector bails in the manner previously described.

As broadly illustrated in FIG. **2**, the actuating bail **26** includes a pivotal frame **43** having rollers **44** on either side which are biased upwardly by a spring **45** into contact with cycle shaft cams, not shown, on the cycle shaft. As the cycle shaft is rotated through each print cycle the cams will engage the rollers **44** to force the bail to pivot downwardly about its shaft causing displacement of those selector latches not moved out of position to actuate the displacement mechanism. Of course other parts and elements are associated with the character selection unit described to insure proper correlation between the selector latches, actuating bail, cycle shaft and filter shaft in the printing of each character, it being understood that the foregoing description of a typical keyboard printer unit is intended more as a setting for the following description of a preferred form of magnetic switch assembly.

As shown in FIGS. **2** to **5**, the magnetic switch assembly **50** of the present invention comprises a plurality of magnetic actuating members **52**, each extending downwardly from connection to a latch interposer **24**, and a corresponding number of reed switches **54** are mounted on the back of a printed circuit board **55** in alignment with the magnetic actuating members. Broadly, each actuating member will follow forward advancement of its latch interposer in response to depression of a key lever to close the associated reed switch and to cause a signal to be transmitted through suitable logical circuitry on the printed circuit board to a recording unit, not shown. Although forming no part of the present invention, a filter switch **56** mounted at the end of the filter shaft **40** is operative to control the period of energization of a series of solenoids **58** in automatically printing characters played back from the recording unit, all in a manner described in copending application for "Keyboard Printer Character Selection Unit," filed Jan. 21, 1969, Ser. No. 792,471. The filter switch may also be connected through a clock circuit, not shown, to a suitable logic control circuit on the printed circuit board **55** to synchronize the transmittal of each combination of pulses representing a character in response to actuation of the reed switches **54**.

It is important to note that the reed switches **54** can be mounted on one face of the printed circuit board opposite to the logic circuit elements for the keyboard printer unit so as to be in the direct path of movement of the magnetic actuating members **52**. As shown in detail in FIGS. **4** and **5**, each reed switch conventionally comprises a glass envelope or cartridge **60** containing reed elements **61** and **62**, and terminal leads **63** and **64** extend from opposite ends of the cartridge for connection to the board. Of course, various different types of reed switches are commercially available, and as such the reed switch **54** forms no part of the present invention. For the purpose of illustration, however, the reed elements **61** and **62** may extend inwardly from opposite ends of the cartridge and be normally biased to an open or separated position. The reeds are suitably composed of a magnetizable material so that when the inner free ends of the reeds are brought under the influence of a magnetic field the free ends will be drawn together to close the switch and form a path for transmission of a pulse from suitable pulse generating means in the logic circuit through the recording unit. Again, different forms of reed switches may be employed which in response to movement of a magnetic actuating member into predetermined relation to the inner ends of the reed elements will activate the pulse generating circuit for transmission of pulses to the recording unit, the important feature of the present invention residing more in the mounting and relative disposition of the reed switch and magnetic actuating members.

In order to support each magnetic actuating member in predetermined relation to its respective switch, a holder **70** is formed of a relatively thin flat strip composed of electrically nonconductive or nonmagnetic material possessing limited resiliency or flexibility, such as, a plastic or hard rubber or rubberlike material; and the strip is provided with a recess **72** at one end for lateral insertion of a latch interposer **24** and an open slot **74** at its opposite end for insertion of a bar magnet **75**. In the particular form shown, the cross-sectional dimension of the latch interposer is relatively thin and narrow along the section or portion **76** just forwardly of the latch interposer spring **25'**. In turn, the recess **72** is dimensioned to correspond in thickness and width to that of the interposer portion **76** with a slot **78** of limited extent formed at the end of the interposer in communication with the recess and transverse shoulder or abutment **79** extending partially across the end of the holder. As a result, and as viewed from the underside of the printer apparatus shown in FIG. **2**, the slotted section **78** of the recess can be lined up with the lower edge of the interposer portion **76** and the holder **70** forced upwardly to cause the interposer portion **76** to advance into the recess **72** until the upper edge of the interposer portion clears the terminal end **79** at which point the holder is snapped in place with the natural tension of the sides of the holder surrounding the recess snugly engaging the sides of the interposer portion **76**. The open slot **74** formed along the opposite end of the holder is relatively deep leaving an interconnecting web portion **80** between the recess **72** and slot **74**. Preferably the bar magnet **75** is cylindrical in cross section with its diameter about twice the thickness of the interposer section **76** and, to establish snug-fitting insertion of the magnet within the slot **74**, the slot is provided with inwardly convergent sides forming inclined surfaces **82** extending inwardly from the end of the slot and terminating in aligned grooves or depressions **84** to accommodate the magnet. Accordingly when the magnet is forced laterally and inwardly against the convergent sides **82** it will cause the sides of the slot **74** to spread until the magnet **75** is advanced into alignment with the grooves **84** whereupon the sides of the slot will contract against the sides of the magnet to clamp it securely in place within the aligned grooves. It will be further noted that the entrance to the slot as defined by the convergent sides **82** is dimensioned along with the magnet **75** to be disposed in surrounding, closely spaced relation to the external surface of the reed switch thereby forming a direct, closed magnetic path from the magnet **75** to the reed elements. Again, the magnet should be aligned within the holder in facing relation to the reed switch such that when the latch interposer is at rest and biased rearwardly the reed elements are normally biased to an open position; but when the latch interposer is advanced forwardly the magnet will pass across the free ends of the reed elements to close the switch.

In assembly, each of the magnet holders **70** is snapped in place on one of the latch interposers **24** and the magnets **74** are inserted within the slots **74** of the magnet holders. The printed circuit board **55** is then mounted by suitable mounting brackets **88** and screws **89** to the frame F and solenoid assembly **58** of the printer unit with the reed switches aligned, as shown in FIG. **3**, with each of the respective magnets **75**. In this connection, care should be taken in mounting of the printed circuit board to insure that each magnet is arranged in

closely spaced, parallel relation to its reed switch, and further that the magnet is positioned and properly aligned within the slot so as to control opening and closing of the reed switch in following the movement of the latch interposer.

Once installed, the magnet holders can be adjusted with respect to the latch interposers by positively forcing the holders along the interposers in either direction, or the magnet may be adjusted within the slot by positively forcing the magnets in an axial direction from either end to obtain the desired alignment with the reed switches. Similarly the printed circuit board mounting brackets **88** will permit a limited degree of adjustment, aided if necessary by the use of shims, to effect the desired alignment with the magnetic actuating members. As one or more latch interposers **24** are advanced forwardly, against the urging of their springs **25'**, the magnet holders **70** attached to the interposers **24** will be correspondingly advanced with the magnets passing across the reed elements to cause each respective switch to close. The combination of reed switches closed is therefore the same as the combination of interposers advanced by the selector bails **20**. Accordingly, each combination of signals produced in response to depression of a key lever is representative of the chosen character and, when transmitted back to the solenoid assembly **58** will cause actuation of the same latch interposers **24** to automatically print the same character. Of course the latch interposers are returned to their original disposition at or near the end of each print cycle to reopen the switches in preparation of the next cycle.

Accordingly it will be seen that the magnetic switch assembly is characterized by its ease of installation with snap-on assembly of the holder and magnets and the magnets being held securely in place by the natural resiliency of the holder material; yet the assembly permits ease of adjustment. Further, the holder will snugly engage the latch interposer under its natural tension, although if desired the holder may be adhesively secured or bonded to the interposer and any necessary adjustment made through adjustment of the magnet. Moreover, the convergent surfaces at the entrance to the slot for the magnet will cooperate in maintaining alignment between the magnet and reed switch as well as to establish a closed magnetic path between the elements. Finally the parts comprising the switch assembly are low in cost and characterized by simplicity of mounting both of the reed switches on the circuit board and of the holders on the latch interposers so as to occupy a minimum of space.

It is to be understood from the foregoing that various modifications and changes may be made in the construction and arrangement of elements comprising the preferred form of present invention, particularly for use in other forms of printer apparatus than that described, without departing from the spirit of the present invention.

What is claimed is:

1. In a code generating keyboard system, a magnetic switch assembly for converting translational movement of an elongated link arm to an electrical signal comprising:

electrical signal generating means including a magnetically responsive switch member positioned in adjacent, spaced parallel relation to the link arm and including switch elements movable between an open and closed position in response to passage of the magnetic field of a magnet moving parallel to the switch elements,

an elongated magnet to control movement of said switch member between the open and closed positions, and

a magnet holder releasably connecting said elongated magnet to the link arm, said holder provided with a recessed portion adjacent to one end thereof including an entrance opening through said holder for releasable insertion of the link arm into the recessed portion in a direction transversely of the length of the link arm, and said magnet being releasably inserted into a magnet-receiving slot at the end of said holder opposite to the one end thereof in a direction transversely of the length of the link arm so as to be positioned parallel both to the link arm and the switch member whereby to control movement of said switch member between the open and closed positions in response to lengthwise movement of the link arm in a direction parallel to the switch member, and the magnet-receiving slot in said magnet holder defined by opposed clamping side portions having forwardly divergent end portions diverging forwardly toward said switch member in a direction away from the link arm, and said magnet being frictionally engaged by the clamping side portions of said magnet holder, said clamping side portions diverging toward the switch member with at least a portion of the switch member disposed in the slot between the forwardly divergent end portions in closely spaced, parallel relation to the magnet.

2. In a code generating keyboard system according to claim **1**, said magnet aligned in closed spaced parallel relation to said switch member, the polarity of the magnet being such as to close said switch element as the magnet is advanced parallel to said switch element in response to movement of the link arm.

3. In a code generating keyboard system according to claim **1**, the link arm-receiving recessed portion frictionally engaging the link arm and being slidable lengthwise of the link arm to align said magnet in the magnet-receiving slot in said magnet holder opposite to the switch member, and said magnet being slidable in the magnet-receiving slot in a direction parallel to the length of the link arm independently of slidable adjustment of said holder lengthwise of the link arm.

4. In a code generating keyboard unit having a plurality of interposers aligned in side-by-side relation to one another for lengthwise, independent movement of selected ones of said interposers between an inactive position and an active position according to a preselected code in advancing characters on the keyboard to a printing position, the combination therewith comprising:

means for generating electrical signals representative of each character selected in response to movement of selected ones of said interposers including a plurality of electrical switch members, each disposed opposite to one of said interposers and each including switch elements movable between an open and closed position in response to passage of the magnetic field of a magnet moving parallel to the switch member,

an elongated magnet for each of said switch members, and

a magnet holder releasably connecting each magnet to an interposer for movement of the magnet axially of its length in spaced parallel relation to its respective switch members in response to lengthwise movement of an associated interposer, said magnet holder having opposed clamping side portions provided with forwardly divergent end portions diverging forwardly toward its associated switch member in a direction away from said interposers to define an open slot therebetween for insertion of said magnet in a direction transversely of the link arm, and said magnet being frictionally held in the slot by the clamping side portions in closely spaced parallel relation to its respective switch member with at least a portion of the switch member disposed between the forwardly divergent end portions whereby to activate said switch member in response to lengthwise movement of its interposer.

5. In a code generating keyboard unit according to claim **4**, said clamping side portions having opposed, facing magnet-receiving grooves therein, the width of the slot defined by said clamping side portions being such that said magnet will spread the side portions as it is inserted into alignment with the grooves so as to be securely held within the grooves under the natural tension of the side portions of the slot.

6. In a code generating keyboard unit wherein a printing mechanism is actuated by control linkage in response to depression of one of a plurality of key levers, each key lever representative of a different character to advance a print element corresponding to that character into position, the combination therewith comprising:

a plurality of interposers aligned in closed spaced, side-by-side relation to one another and operatively interconnecting said key levers with said control linkage, different selected combinations of said interposers being independently and longitudinally movable in response to depression of each key lever according to a preselected code, and each interposer including a relatively flat, elongated holder-mounting portion,

electrical signal generating means including a mounting board in spaced parallel relation to the holder-mounting portions on said interposers, a plurality of magnetically controllable switch members each positioned on said mounting board in alignment with and in facing relation to one of said holder-mounting portions on an interposer, each switch member including switch elements movable between an open and closed position in response to passage of the magnetic field of a magnet moving parallel to the switch members,

an elongated magnet for each of said switch members,

a magnet holder for releasable connection of each of said magnets to the holder-mounting portion of an interposer to follow the movement thereof, each holder being formed of a thin, flat rectangular strip of nonmagnetic material having a recessed portion adjacent to one end, the recessed portion corresponding to the cross-sectional size of the holder-mounting portion with a side entrance into said recessed portion for insertion of said holder-mounting portion in a direction transversely of the length of the link arm into frictional engagement within said magnet holder, and

a magnet-receiving slot at the end opposite to the one end thereof defined by opposed, clamping side portions having forwardly divergent end portions diverging forwardly toward an associated switch member in a direction away from said interposers to define an open slot therebetween for insertion of said magnet into the slot in a direction transversely of the interposer, the width of the slot defined by said clamping side portions being such that said magnet will spread the side portions as it is inserted into the slot so as to be frictionally held within the slot, said clamping side portions diverging toward the switch member with at least a portion of the switch member disposed in the slot between the forwardly divergent end portions in closely spaced, parallel relation to the magnet, and said switch member being advanced between open and closed positions when the magnet is moved in response to lengthwise movement of its associated interposer.

* * * * *