Feb. 14, 1961 J. C. GOFF 2,971,462

SUBMARINE MINE AND MOORING MEANS THEREFOR

Filed Sept. 14, 1951 3 Sheets-Sheet 1

FIG. 1.

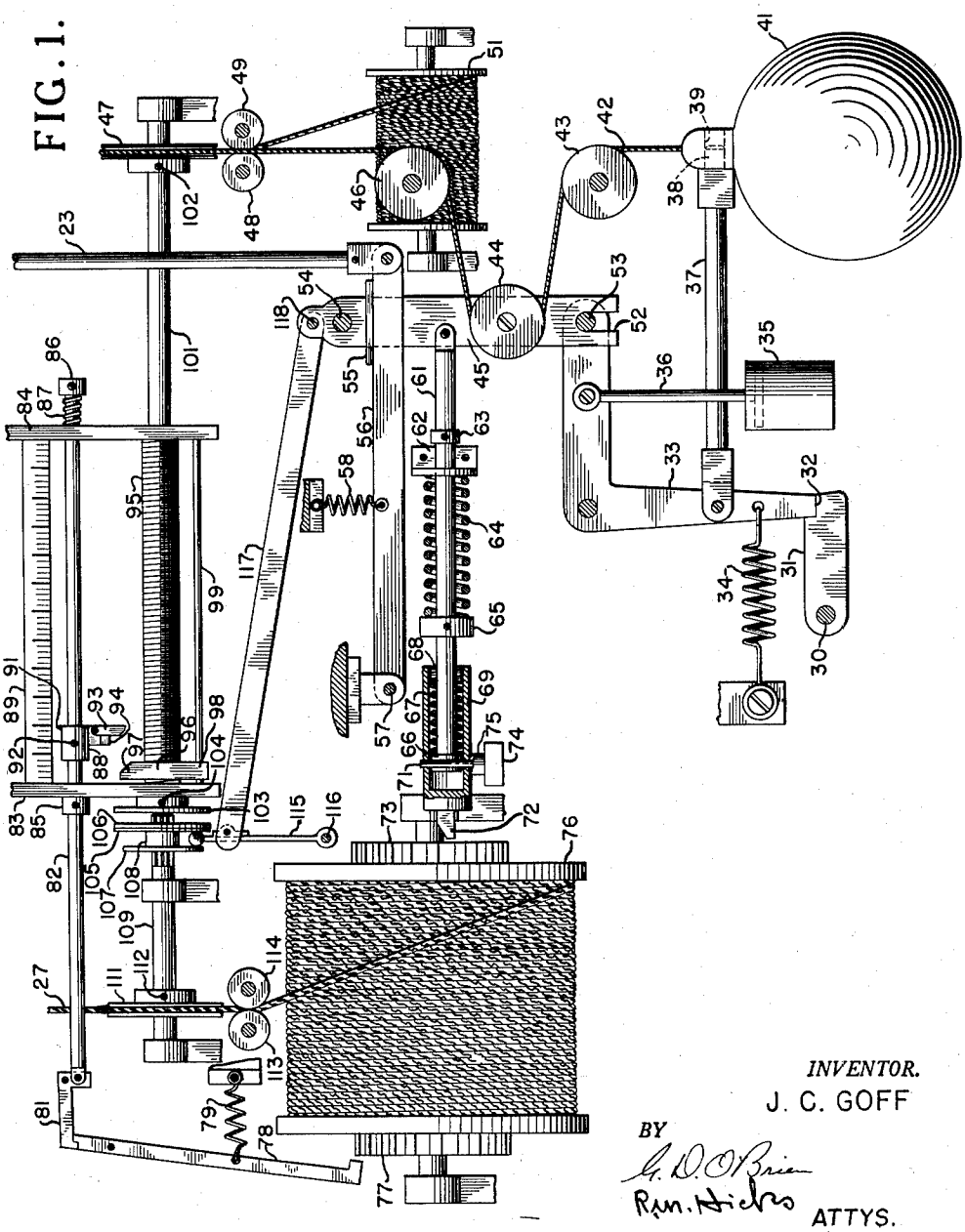

INVENTOR.
J. C. GOFF
BY
A. D. O'Brien
Ram. Hicks ATTYS.

SUBMARINE MINE AND MOORING MEANS THEREFOR

Filed Sept. 14, 1951 3 Sheets-Sheet 2

FIG. 2.

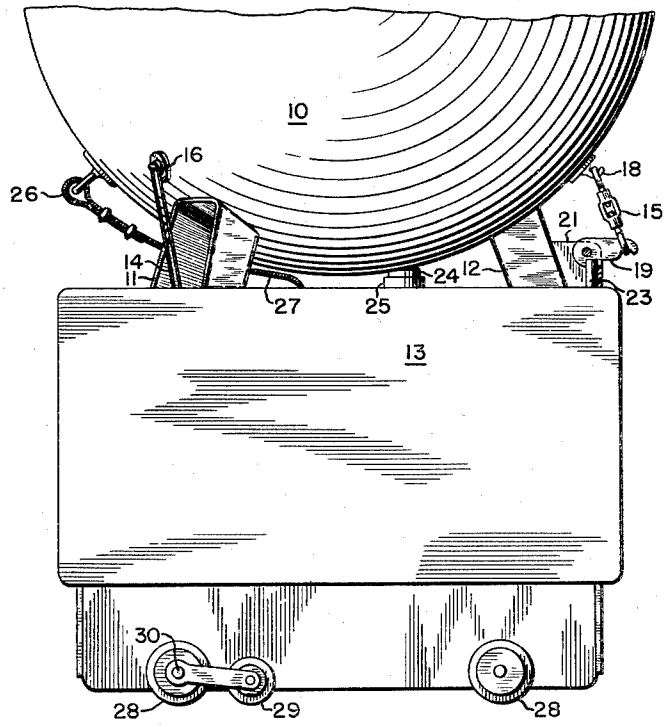

FIG. 3.

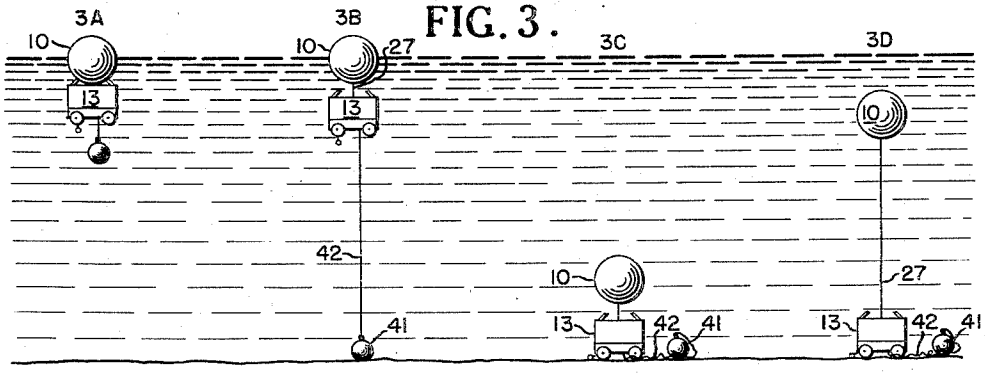

INVENTOR.
J. C. GOFF

BY
G. D. O'Brien
R. M. Hicks ATTYS.

Feb. 14, 1961 J. C. GOFF 2,971,462

SUBMARINE MINE AND MOORING MEANS THEREFOR

Filed Sept. 14, 1951 3 Sheets-Sheet 3

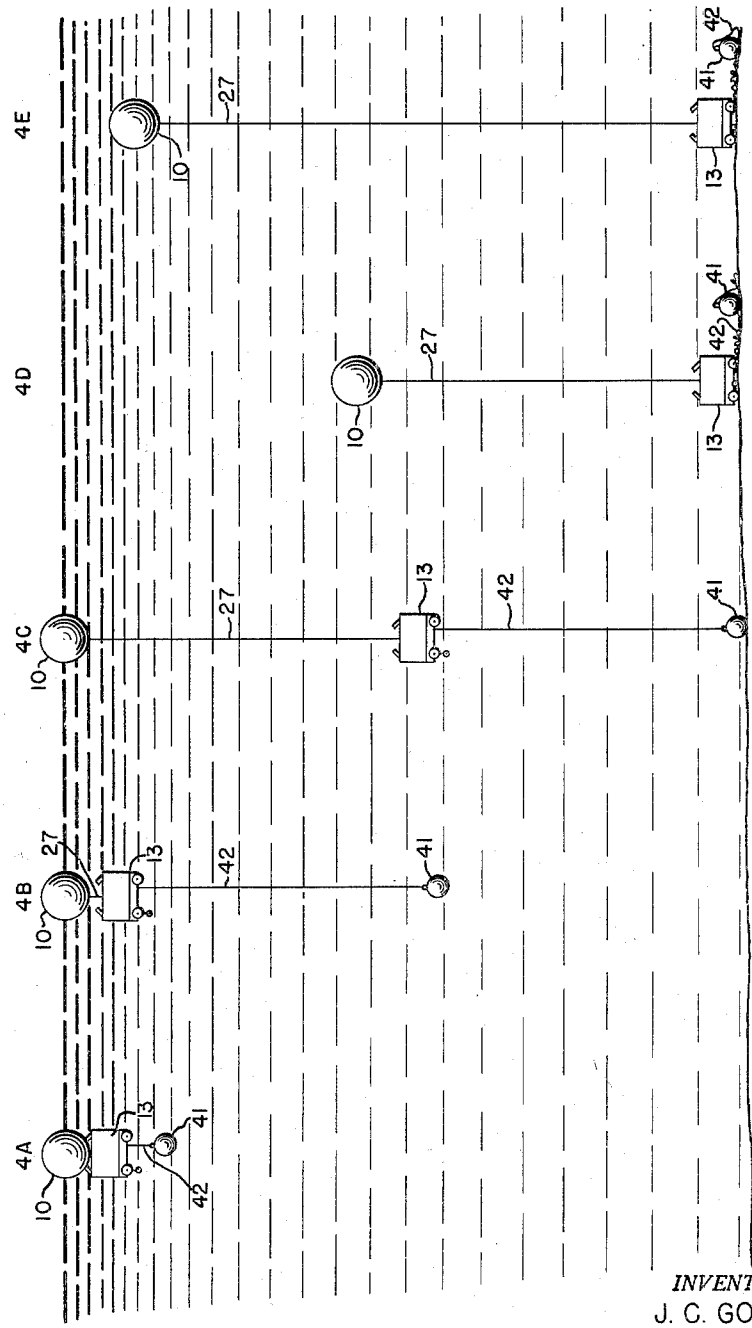

FIG. 4.

INVENTOR.
J. C. GOFF

BY R. W. O'Brien
R. M. Hicks ATTYS.

United States Patent Office 2,971,462
Patented Feb. 14, 1961

2,971,462

SUBMARINE MINE AND MOORING MEANS THEREFOR

John C. Goff, Copley Lane, Rte. 1, Silver Spring, Md.

Filed Sept. 14, 1951, Ser. No. 246,700

16 Claims. (Cl. 102—13)

(Granted under Title 35, U.S. Code (1952), sec. 266)

This invention relates to mine laying and more particularly to a submarine mine of the type comprising a buoyant mine case detachably mounted on a mine anchor and connected thereto by an extensible mooring cable.

Numerous arrangements have been provided previously which anchor the mine at a predetermined distance below the surface of the water with various means for adjusting the depth below the surface, including the commonly used plummet method of depth taking. However, these previous arrangements did not provide for carrying the mine casing to a relatively deep inoperative position with a subsequent release or delayed rising after a certain time interval to a predetermined adjustable depth below the surface, where the mine would be operative for its intended purpose, nor did they prevent the mine from being carried below a predetermined maximum depth which would crush the mine casing.

According to one preferred embodiment of the present invention the mine anchor is detachably secured to a buoyant mine casing and incorporates a novel mechanism having a threaded rod along which travels a small trolley. A plummet is also releasably secured to the anchor and is adapted to be released a predetermined time after the mine is launched. A plummet cable attached to the plummet is wound around a drum and passes over a measuring pulley which rotates the threaded rod in one direction during descent of the plummet, and drives the trolley in one direction. The mine casing is moored to the anchor by a cable which is wound around another drum and passes over another measuring pulley which rotates the threaded rod in the opposite direction when operatively connected thereto and drives the trolley in the opposite direction. Means are provided for releasing the mine from the anchor and filling the anchor with water, when the plummet touches the bottom or reaches the end of its run, and also for engaging the mine cable measuring pulley with the threaded rod, only when the plummet touches bottom. When the plummet strikes bottom before reaching the end of its run, locking means is engaged with the mine cable drum so that the mine is carried down with the anchor, after it is filled with water. When the plummet reaches the end of its run without engaging the bottom, the mine is released from the anchor so that the anchor will fill with water and drop towards the bottom with the mine cable running off of the mine cable drum, but without the mine cable measuring pulley being engaged with the threaded rod. When the plummet touches bottom, the mine cable drum is locked in a similar manner and the mine is carried down below the surface to a distance equal to the length to the plummet line. Further means are provided for disengaging the locking means in either case after a predetermined interval of time, so that the mine rises towards the surface with the mine cable pulley in engagement with the threaded rod thus moving the trolley in the opposite direction until it engages an adjustable stop which operates to engage the second locking

means with the mine cable drum to moor the mine at a predetermined distance below the surface.

One object of the present invention is to provide a mine having adjustable automatic depth setting and which will not carry the mine below a predetermined depth in any manner of operation.

Another object of the present invention is to provide a mine having an easily adjustable automatic depth setting together with delayed rising from a relatively deep position before final mooring at the adjustable operative depth.

Another object of the present invention is to provide a mine anchor which will carry the mine to the bottom or to a predetermined inoperative depth below the surface and subsequently permit the mine to rise and moor it at an operative depth below the surface.

Other objects and many of the attendant advantages of this invention will be readily appreciated as the same becomes better understood by reference to the following detailed description when considered in connection with the accompanying drawings wherein:

Fig. 1 is a schematic view of the mechanism incorporated in one preferred embodiment of the present invention;

Fig. 2 is an elevational view with portions broken away showing the releasable connection between the mine and the anchor housing;

Fig. 3 is a schematic view showing the operation of the mine in depths less than the maximum safe depth for the particular mine, and

Fig. 4 is a view similar to Fig. 3 showing the operation of the mine in depths greater than the maximum safe depth for the particular mine.

Referring now to the drawings in detail and with particular reference to Fig. 2, the mine casing **10**, which is adapted to contain an explosive charge (not shown) and is designed for buoyancy, is mounted on supports **11** and **12** and is secured to the anchor housing **13** by a clip **14** and a turnbuckle **15**. Clip **14** engages a hook **16** on the mine casing **10** and is secured to the anchor housing **13**, while turnbuckle **15** engages a hook **18** on the mine **10** and a trigger catch **19** which is pivoted on the bracket **21** in turn secured to support **12**. Pivoted catch **19** is retained in the position shown by the end of a mine release rod **23** until subsequently released.

The mine casing **10** engages an outwardly movable spring urged piston **24** mounted in the cylindrical casing **25** to hold an inlet valve (not shown) in closed position until after the anchor **13** is released from the mine casing **10**. Mine casing **10** also has an eye **26** secured thereto which engages the looped end of the mooring cable **27** extending through a suitable opening in the anchor housing **13**.

The mechanism shown in Fig. 1 would be housed within the anchor housing **13** but has been shown in schematic form to more clearly illustrate the operation thereof. In the conventional arrangement commonly used with this type of mine the anchor housing is provided with wheels **28** which are adapted to engage in mine tracks on the mine layer. A fifth wheel **29**, as shown in Figs. 1 and 2, also engages in the mine tracks and after release of a mine drops down due to gravity rotating shaft **30** and crank **31** thus releasing from the notch **32** a bell crank or plummet release lever **33** urged by the spring **34** to the left as shown.

A dash pot **35** is connected by the piston rod **36** to the other arm of the bell crank **33** to retard the movement thereof. A rod **37** is also connected to the bell crank **33** and is provided with a pin **38** which engages a suitable transverse bore **39** in the upper end of the plummet **41**. A plummet cable or line **42** is attached to the plummet **41** and is trained over a fixed pulley **43**, pulley **44** ro-

tatably mounted on a pivoted control lever or tension arm **45**, over another fixed pulley **46**, over a measuring pulley **47**, between guide pulleys **48** and **49** and is wound and secured on the plummet cable drum **51** which is preferably provided with a braking mechanism (not shown) for maintaining tension on cable **42** during descent of the plummet **41**.

Control lever **45** is provided with a slot **52** at its lower end which engages the pin **53** on bell crank **33**. Lever **45** is pivoted at **54** and is provided with a shoulder **55** engaging the lever **56** which is pivoted at **57** and is resiliently urged upwardly by spring **58**. The mine case release rod **23** is pivotally connected to the end of lever **56**. A locking rod **61** is pivoted at an intermediate point on lever **45** and extends through a fixed bracket **62** with a stop **63** to limit its leftward movement. A spring **64** engages the bracket **62** at one end and a collar **65** mounted on the rod **61** urging the latter to the left.

The opposite end of locking rod **61** is provided with an enlarged portion **66** forming a shoulder against which the spring **67** engages with the opposite end of spring **67** engaging the plug **68** threaded into the end of the hollow cylindrical barrel of a locking pawl **69**. The locking rod **61** is retained in fixed relation to the locking pawl **69** by the locking pin **71** which extends diametrically through the enlarged portion **66**. The other end of locking pawl **69** is provided with a tapered nose **72** which is adapted to engage between the teeth of the drum wheel **73** to prevent rotation thereof, when pawl **69** is moved to the left.

A timer control **74** is suitably connected to a boss **75** on locking pawl **69** in a position to drive out the pin **71** by suitable means such as an explosive charge after a predetermined interval of time subsequent to launching of the mine. For this latter purpose the timer control may be suitabley connected with the fifth wheel **29**, bell crank **33** or some other movable member by means not shown, so as to start its cycle concurrently with launching of the mine or at some later time in the operation of the mechanism, as desired.

The drum wheel **73** is secured to one side of the mine cable drum **76** about which the mine mooring cable **27** is wound. The opposite end of the drum **76** is provided with a similar drum wheel or ratchet gear **77** which is adapted to be engaged by a suitable locking pawl **78** urged toward the wheel by a spring **79**. The pawl **78** is retained out of engagement with the teeth of the drum wheel **77** by means of the trigger catch **81** actuated by the depth setting rod **82** which is slideably mounted in the frame members **83** and **84** and is provided with stop collars **85** and **86**. A spring **87** urges the rod to the right as shown. An adjustable stop member **88** is slideably mounted on the rod **82** between the frame members **83** and **84** and adjacent a scale **89** and is provided with a pointer **91** which indicates the depth at which the mine will be finally moored. Stop member **88** is adjustably secured in any desired position corresponding to the markings on the scale **89** by a set screw **92**. A pivoted pawl **93** is mounted on the lower portion of adjustable stop member **88** and is engaged by a fixed lug **94** to limit its movement to one direction only.

A threaded element or screw shaft **95** is rotatably mounted by bearings (not shown) in the frame members **83** and **84**. A trolley or traveller **96** is mounted on the screw shaft **95** and has an upper arm **97** adapted to engage the pawl **93** and a lower arm **98** slideably mounted on a guide rod **99** extending between the frame members **83** and **84**. The lower arm **98** functions to prevent rotation of the traveller **96** with the screw shaft **95**.

Screw shaft **95** has a stub shaft **101** secured thereto at one end and extending through frame member **84** for mounting measuring pulley **47** which is secured by a set screw **102**.

A clutch member **103** is suitably secured to a stub shaft on the opposite end of screw **95** by suitable means such as the set screw **104** and is adapted to engage an opposing clutch member **105** provided with a suitable clutch facing **106**. Clutch member **105** is provided with a spaced flange **107** forming an annular groove **108** and is splined or suitably connected to a shaft **109** so as to rotate therewith but to move axially relative thereto. A pulley **111** is suitably secured to shaft **109** as by a set screw **112** and is engaged by the mine mooring cable **27** which rotates pulley **111** and clutch member **105** when the cable **27** is paying out from the drum **76** between guide pulleys **113** and **114**. Clutch member **105** is movable axially in either direction by the shifting arm **115** which is mounted on a fixed pivot at **116** and is actuated by a shifting rod **117** pivotally mounted at **118** on the upper end of control lever **45** above pivot **54**.

The operation of the submarine mine will be clearly apparent from the following description taken in connection with Fig. 3 or Fig. 4 together with the detailed showings in Figs. 1 and 2.

Fig. 3 illustrates the operation at depths less than the maximum to which the mine should be submerged to prevent crushing thereof due to excessive pressure. The mine is launched by a mine laying vessel in the usual manner from the racks and immediately after launching the fifth wheel **29** will drop down by gravity to rotate shaft **30** and release the lower arm of bell crank **33** from the notch **32** to permit the spring **34** to move the lower arm of the bell crank **33** to the left, as shown in Fig. 1, against the resistance of the dash pot **35**. After a predetermined interval the rod **37** will have moved a sufficient distance to the left to release the pin **38** from the transverse bore **39** in the plummet **41**. The plummet will start to drop, but, since the pin **53** has not yet disengaged from the slot **52**, the control lever **45** will not move from its neutral position, as shown, in Fig. 1.

A short time later the bell crank **33** has moved far enough to disengage the pin **53** from slot **52**, however, by this time the plummet has reached a constant speed of descent and will exert only a small force on the pulley **44** due to the braking of drum **51** and exerted through the plummet cable **42**, which force is substantially balanced by the force of the spring **64** to the left exerted through rod **61** on control lever **45**, so that the control lever **45** will remain in the substantially neutral position shown. This stage of the operation is shown at **3A**, where the plummet has started its descent toward the bottom. At **3B** the plummet has struck bottom which decreases the tension on the cable **42** permitting the spring **64** to move the control lever **45** to the left which in turn moves the right hand corner of the shoulder **55** downward in engagement with the lever **56** thus moving the mine release rod **23** downward and releasing catch **19**, shown in Fig. 2, to detach the mine **10** from the anchor **13**.

At the same time rod **61** moves to the left engaging the tapered nose **72** of the locking pawl **69** between the teeth of the drum wheel **73** to prevent rotation thereof. However, there is sufficient slack in the mine mooring cable **27** to permit the mine **10** to separate from the anchor **13** and thus actuate the inlet valve through piston **24** permitting water to enter the anchor housing **13** which will therefore sink to the bottom dragging the mine **10** with it, as illustrated at **3C**, where the mine will remain until the timer control **74** has gone through its cycle and set off the explosive charge for releasing the pin **71**.

During the drop of the plummet from the position of **3A** until the plummet reaches the bottom, the traveller **96** has been moved by measuring pulley **47** driving screw shaft **95** from the initial position at the extreme left hand end of screw shaft **95**, as shown in Fig. 1, to a position somewhere between the adjustable stop **88** and the right hand frame member **84** depending on the depth of the bottom. The movement of the traveller **96** is obviously proportional to the depth of the body of liquid or the length of the plummet line **42** which has run out before the plummet touches bottom.

After the pin 71 has been driven out by the explosive charge the locking pawl 69 will move to the right due to the action of spring 67 and will move the tapered nose 72 out of engagement with the drum wheel 73 to pay out the mine mooring cable 27. Since the clutch member 105 is engaging the clutch member 103 and plummet cable 42 is slack over measuring pulley 47, the screw shaft 95 will rotate in the opposite direction moving the traveller 96 to the left until it strikes the pawl 93 which is prevented from moving to the left by the lug 94 and therefore moves the rod 82 to the left releasing the trigger catch 81 and engaging the pawl 78 with the teeth of the drum wheel 77 thus stopping the mine at an operative distance below the surface, as shown at 3D, corresponding to the adjusted position of the stop member 88, as indicated on the scale 89.

In the operation of the submarine mine in relatively deep water which is over the maximum depth at which the mine may be submerged without crushing the functioning of the mechanism shown in Fig. 1 is substantially different and will be described in conjunction with the steps shown in Fig. 4. The mine is launched and the plummet is released in a manner similar to that described with reference to Fig. 3, however, since the bottom is well over the maximum safe depth corresponding to the length of the plummet cable 42, as indicated on the scale 89, the plummet will drop until it has reached the end of its cable 42, at which time the drum 51 is abruptly stopped and will cause a rapid immediate increase in tension on cable 42 which will move the pulley 44 and control lever 45 to the right.

This movement of control lever 45 will move the rod 61 to the right and keep the tapered nose 72 out of engagement with drum wheel 73 and simultaneously move the left corner of shoulder 55 downward thus actuating the anchor release rod 23 for separating the mine 10 from the anchor 13 and actuating the inlet valve through piston 24 to fill the anchor with water, as illustrated at 4B. The anchor will continue its downward movement, but, since the tapered nose 72 is not engaged with drum wheel 73, the mooring cable drum 76 will pay out the cable 27 over pulley 111, and, since the shifting arm 115 is moved to the left with movement of control lever 45 to the right, the clutch members 103 and 105 are disengaged, and therefore the traveller 96 which has moved to the extreme right hand end of the screw shaft 95 will not be moved to the left at this time.

The anchor 13 will continue downward with the mine 10 floating at the surface until the plummet 41 touches the bottom, as illustrated at 4C. When this occurs, the abrupt decrease of tension of the plummet cable 42 permits the spring 64 to move the lever 45 to the left and engage the tapered nose 72 of locking pawl 69 with the drum wheel 73 thus stopping further rotation of the mooring cable drum 76. The anchor will continue to the bottom pulling the mine down with it until the mine is submerged the maximum safe depth below the surface which will not cause crushing of the mine, as shown at 4D. After a predetermined time interval the timer control 74 will set off the explosive charge and release pin 71 at which time the mooring cable drum 76 is again released and the mine mooring cable 27 will pay out until the mine has reached a predetermined distance below the surface in a manner similar to that described with reference to Fig. 3.

It will thus be seen that the present arrangement functions in either deep or shallow water to submerge the mine to a substantial distance below the surface, where it is inoperative for its intended purpose for a predetermined length of time, and subsequently permits the mine to rise and moors it at a predetermined operative distance below the surface, but in either case the mine is not submerged under any normal operating conditions below the depth where crushing may occur.

Obviously many modifications and variations of the present invention are possible in the light of the above teachings, and it is therefore to be understood that within the scope of the appended claims the invention may be practiced otherwise than as specifically described.

The invention described herein may be manufactured and used by or for the Government of the United States of America for governmental purposes without the payment of royalties thereon or therefor.

What is claimed as new and desired to be secured by letters patent of the United States is:

1. A submarine device comprising a buoyant casing, an anchor housing, means for detachably mounting said casing on said anchor housing, a mooring cable contained within said anchor housing and having one end attached to said casing, a plummet, a plummet cable contained within said anchor housing and having one end attached to said plummet, separate means for paying out said mooring cable and said plummet cable respectively, a movable member, means selectively operable for moving said member in one direction responsive to paying out of said plummet cable and in the opposite direction responsive to paying out of said mooring cable, an adjustable stop member positioned in the path of travel of said movable member and engageable thereby only when moving in said opposite direction, means for operatively connecting said means for paying out said plummet cable to said means for moving said movable member, means responsive only to a decrease of tension on said plummet cable on contact of the plummet with the bottom of a body of liquid for locking said means for paying out said mooring cable and operatively connecting said means for paying out said mooring cable with said means for moving said movable member, means responsive to either a decrease or increase of tension on said plummet cable for releasing said casing from said anchor, a timer control for releasing said locking mechanism after a predetermined interval of time and paying out said mooring cable, and means actuatable by said stop member for again locking said mean for paying out said mooring cable in response to engagement by said movable member in said opposite direction to position said casing at a depth below the surface determined by the position of said adjustable stop member.

2. A submarine device comprising a buoyant casing, an anchor housing, means for detachably mounting said casing on said anchor housing, means actuatable for filling said anchor housing with liquid, a mooring cable contained within said anchor housing and having one end attached to said casing, a plummet, a plummet cable contained within said anchor housing and having one end attached to said plummet, separate means for paying out said mooring cable and said plummet cable respectively, a movable member, means selectively operable for moving said member in one direction responsive to paying out of said plummet cable and in the opposite direction responsive to paying out of said mooring cable, an adjustable stop member positioned in the path of travel of said movable member and engageable thereby only when moving in said opposite direction, means for operatively connecting said means for paying out said plummet cable to said means for moving said movable member, means responsive only to a decrease of tension on said plummet cable on contact of the plummet with the bottom of a body of liquid for locking said means for paying out said mooring cable and operatively connecting said means for paying out said mooring cable with said means for moving said movable member, means responsive to either a decrease or increase of the tension on said plummet cable for releasing said casing from said anchor and actuating said means for filling said anchor casing with liquid, a timer control for releasing said locking mechanism after a predetermined interval of time and paying out said mooring cable, and means actuatable by said stop member for again locking said means for paying out said mooring cable in response to engagement by said movable member in said opposite direction to position said casing

at a depth below the surface determined by the position of said adjustable stop member.

3. A submarine device comprising a buoyant casing, an anchor housing, means for detachably mounting said casing on said anchor housing, means actuatable for filling said anchor housing with liquid, a mooring cable contained within said anchor housing and having one end attached to said casing, a plummet, a plummet cable contained within said anchor housing and having one end attached to said plummet, separate means for paying out said mooring cable and said plummet cable respectively, a movable member, means selectively operable for moving said member in one direction responsive to paying out of said plummet cable and in the opposite direction responsive to paying out of said mooring cable, an adjustable stop member positioned in the path of travel of said movable member and engageable thereby only when moving in said opposite direction, means for operatively connecting said means for paying out said plummet cable to said means for moving said movable member, means responsive only to a decrease of tension on said plummet cable on contact of the plummet with the bottom of a body of liquid for locking said means for paying out said mooring cable and operatively connecting said means for paying out said mooring cable with said means for moving said movable member, further means responsive to a decrease of the tension on said plummet cable for releasing said casing from said anchor and actuating said means for filling said anchor casing with liquid, a timer control for releasing said locking mechanism after a predetermined interval of time and paying out said mooring cable, and means actuatable by said stop member for again locking said means for paying out said mooring cable in response to engagement by said movable member in said opposite direction to position said casing at a depth below the surface determined by said adjustable stop member.

4. A submarine device comprising a buoyant casing, an anchor housing, means for detachably mounting said casing on said anchor housing, means actuatable for filling said anchor housing with liquid, a mooring cable contained within said anchor housing and having one end attached to said casing, a plummet, a plummet cable contained within said anchor housing and having one end attached to said plummet, separate means for paying out said mooring cable and said plummet cable respectively, a movable member, means selectively operable for moving said member in one direction responsive to paying out of said plummet cable and in the opposite direction responsive to paying out of said mooring cable, an adjustable stop member positioned in the path of travel of said movable member and engageable thereby only when moving in said opposite direction, means for operatively connecting said means for paying out said plummet cable to said means for moving said movable member, means responsive only to a decrease of tension on said plummet cable on contact of the plummet with the bottom of a body of liquid for locking said means for paying out said mooring cable with said means for moving said movable member, means responsive to an increase of the tension on said plummet cable for releasing said casing from said anchor and actuating said means for filling said anchor casing with liquid, means for releasing said locking mechanism and paying out said mooring cable as said releasing means is actuated to a release position, timer control means connected to said releasing means for actuating the releasing means to said release position, and means actuatable by said stop member for locking said means for paying out said mooring cable in response to engagement by said movable member in said opposite direction to position said casing at a depth below the surface determined by said adjustable stop member.

5. A submarine mine comprising a buoyant mine casing, an anchor housing, means for detachably mounting said mine casing on said anchor housing, a mooring cable contained within said anchor housing and having one end attached to said mine casing, a plummet, a plummet cable contained within said anchor housing and having one end attached to said plummet, separate means for paying out said mooring cable and said plummet cable respectively, a movable member, means selectively operable for moving said member in one direction responsive to paying out of said plummet cable and in the opposite direction responsive to paying out of said mooring cable, an adjustable stop member positioned in the path of travel of said movable member and engageable thereby only when moving in said opposite direction, means for operatively connecting said means for paying out said plummet cable to said means for moving said movable member, means responsive only to a decrease of tension on said plummet cable on contact of the plummet with the bottom of a body of liquid for locking said means for paying out said mooring cable and operatively connecting said means for paying out said mooring cable with said means for moving said movable member, means responsive to either a decrease or increase of tension on said plummet cable for releasing said mine casing from said anchor, means for releasing said locking mechanism and paying out said mooring cable as the releasing means is actuated to a release position, timer control means connected to said releasing means for actuating the releasing means to said release position, and means actuatable by said stop member for again locking said means for paying out said mooring cable in response to engagement by said movable member in said opposite direction to position said mine casing at a depth below the surface determined by the position of said adjustable stop member.

6. A submarine mine comprising a buoyant mine casing, an anchor housing, means for detachably mounting said mine casing on said anchor housing, means actuable for filling said anchor housing with liquid, a mooring cable contained within said anchor housing and having one end attached to said mine casing, a plummet, a plummet cable contained within said anchor housing and having one end attached to said plummet, separate means for paying out said mooring cable and said plummet cable respectively, a movable member, means selectively operable for moving said member in one direction responsive to paying out of said plummet cable and in the opposite direction responsive to paying out of said mooring cable, an adjustable stop member positioned in the path of travel of said movable member and engageable thereby only when moving in said opposite direction, means for operatively connecting said means for paying out said plummet cable to said means for moving said movable member, means responsive only to a decrease of tension on said plummet cable on contact of the plummet with the bottom of a body of liquid for locking said means for paying out said mooring cable and operatively connecting said means for paying out said mooring cable with said means for moving said movable member, means responsive to either a decrease or increase of the tension on said plummet cable for releasing said mine casing from said anchor and actuating said means for filling said anchor casing with liquid, means for releasing said locking mechanism and paying out said mooring cable as said releasing means is actuated to a release position, timer control means connected to said releasing means for actuating the releasing means to said release position, and means actuatable by said stop member for again locking said means for paying out said mooring cable in response to engagement by said movable member in said opposite direction to position said mine casing at a depth below the surface determined by the position of said adjustable stop member.

7. A submarine mine comprising a buoyant mine casing, an anchor housing, means for detachably mounting said mine casing on said anchor housing, means actuatable for filling said anchor housing with liquid, a mooring cable contained within said anchor housing and having one end attached to said mine casing, a plummet, a plummet cable contained within said anchor housing and having one end attached to said plummet, separate

means for paying out said mooring cable and said plummet cable respectively, a movable member, means selectively operable for moving said member in one direction responsive to paying out of said plummet cable and in the opposite direction responsive to paying out of said mooring cable, an adjustable stop member positioned in the path of travel of said movable member and engageable thereby only when moving in said opposite direction, means for operatively connecting said means for paying out said plummet cable to said means for moving said movable member, means responsive only to a decrease of tension on said plummet cable on contact of the plummet with the bottom of a body of liquid for locking said means for paying out said mooring cable and operatively connecting said means for paying out said mooring cable with said means for moving said movable member, further means responsive to a decrease of the tension on said plummet cable for releasing said mine casing from said anchor and actuating said means for filling said anchor casing with liquid, means for releasing said locking mechanism and paying out said mooring cable as said releasing means is actuated to a release position, timer control means connected to said releasing means for actuating the releasing means to said release position, and means actuatable by said stop member for again locking said means for paying out said mooring cable in response to engagement by said movable member in said opposite direction to position said mine casing at a depth below the surface determined by said adjustable stop member.

8. A submarine mine comprising a buoyant mine casing, an anchor housing, means for detachably mounting said mine casing on said anchor housing, means actuatable for filling said anchor housing with liquid, a mooring cable contained within said anchor housing and having one end attached to said mine casing, a plummet, a plummet cable contained within said anchor housing and having one end attached to said plummet, separate means for paying out said mooring cable and said plummet cable respectively, a movable member, means selectively operable for moving said member in one direction responsive to paying out of said plummet cable and in the opposite direction responsive to paying out of said mooring cable, an adjustable stop member positioned in the path of travel of said movable member and engageable thereby only when moving in said opposite direction, means for operatively connecting said means for paying out said plummet cable to said means for moving said movable member, means responsive only to a decrease of tension on said plummet cable on contact of the plummet with the bottom of a body of liquid for locking said means for paying out said mooring cable and operatively connecting said means for paying out said mooring cable with said means for moving said movable member, means responsive to an increase of the tension on said plummet cable for releasing said mine casing from said anchor and actuating said means for filling said anchor casing with liquid, means for releasing said locking mechanism and paying out said mooring cable as said releasing means is actuated to a release position, timer control means connected to said releasing means for actuating the releasing means to said release position, and means actuatable by said stop member for locking said means for paying out said mooring cable in response to engagement by said movable member in said opposite direction to position said mine casing at a depth below the surface determined by said adjustable stop member.

9. A submarine mine comprising a buoyant mine casing, an anchor housing, means for detachably mounting said mine casing on said housing anchor, a mooring cable contained within said anchor housing and having one end attached to said mine casing, a plummet, a plummet cable contained within said anchor housing and having one end attached to said plummet, separate means for paying out said mooring cable and said plummet cable respectively, a movable member, means selectively operable for moving said member in one direction responsive to paying out of said plummet cable and in the opposite direction responsive to paying out of said mooring cable, an adjustable stop member positioned in the path of travel of said movable member and engageable thereby only when moving in said opposite direction, means for operatively connecting said means for paying out said plummet cable to said means for moving said movable member, means responsive only to a decrease of tension on said plummet cable on contact of the plummet with the bottom of a body of liquid for locking said means for paying out said mooring cable and operatively connecting said means for paying out said mooring cable with said means for moving said movable member, means responsive to either a decrease or increase of tension on said plummet cable for releasing said mine casing from said anchor, a timer control for releasing said locking mechanism after a predetermined interval of time and paying out said mooring cable, and means actuatable by said stop member for again locking said means for paying out said mooring cable in response to engagement by said movable member in said opposite direction to position said mine casing at a depth below the surface determined by the position of said adjustable stop member.

10. A submarine mine comprising a buoyant mine casing, an anchor housing, means for detachably mounting said mine casing on said anchor housing, means actuatable for filling said anchor housing with liquid, a mooring cable contained within said anchor housing and having one end attached to said mine casing, a plummet, a plummet cable contained within said anchor housing and having one end attached to said plummet, separate means for paying out said mooring cable and said plummet cable respectively, a movable member, means selectively operable for moving said member in one direction responsive to paying out of said plummet cable and in the opposite direction responsive to paying out of said mooring cable, an adjustable stop member positioned in the path of travel of said movable member and engageable thereby only when moving in said opposite direction, means for operatively connecting said means for paying out said plummet cable to said means for moving said movable member, means responsive only to a decrease of tension on said plummet cable on contact of the plummet with the bottom of a body of liquid for locking said means for paying out said mooring cable and operatively connecting said means for paying out said mooring cable with said means for moving said movable member, means responsive to either a decrease or increase of the tension on said plummet cable for releasing said mine casing from said anchor and actuating said means for filling said anchor casing with liquid, a timer control for releasing said locking mechanism after a predetermined interval of time and paying out said mooring cable, and means actuatable by said stop member for again locking said means for paying out said mooring cable in response to engagement by said movable member in said opposite direction to position said mine casing at a depth below the surface determined by the position of said adjustable stop member.

11. A submarine mine comprising a buoyant mine casing, an anchor housing, means for detachably mounting said mine casing on said anchor housing, means actuatable for filling said anchor housing with liquid, a mooring cable contained within said anchor housing and having one end attached to said mine casing, a plummet, a plummet cable contained within said anchor housing and having one end attached to said plummet, separate means for paying out said mooring cable and said plummet cable respectively, a movable member, means selectively operable for moving said member in one direction responsive to paying out of said plummet cable and in the opposite direction responsive to paying out of said mooring cable, an adjustable stop member positioned in the path of travel of said movable member and engageable thereby only when moving in said opposite direction, means for operatively connecting said means for paying out said plummet cable to said

means for moving said movable member, means responsive only to a decrease of tension on said plummet cable on contact of the plummet with the bottom of a body of liquid for locking said means for paying out said mooring cable and operatively connecting said means for paying out said mooring cable with said means for moving said movable member, further means responsive to a decrease of the tension on said plummet cable for releasing said mine casing from said anchor and actuating said means filling said anchor casing with liquid, and a timer control for releasing said locking mechanism after a predetermined interval of time and paying out said mooring cable, and means actuatable by said stop member for again locking said means for paying out said mooring cable in response to engagement by said movable member in said opposite direction to position said mine casing at a depth below the surface determined by said adjustable stop member.

12. A submarine mine comprising a buoyant mine casing, an anchor housing, means for detachably mounting said mine casing on said anchor housing, means actuatable for filling said anchor housing with liquid, a mooring cable contained within said anchor housing and having one end attached to said mine casing, a plummet, a plummet cable contained within said anchor housing and having one end attached to said plummet, separate means for paying out said mooring cable and said plummet cable respectively, a movable member, means selectively operable for moving said member in one direction responsive to paying out of said plummet cable and in the opposite direction responsive to paying out of said mooring cable, an adjustable stop member positioned in the path of travel of said movable member and engageable thereby only when moving in said opposite direction, means for operatively connecting said means for paying out said plummet cable to said means for moving said movable member, means responsive only to a decrease of tension on said plummet cable on contact of the plummet with the bottom of a body of liquid for locking said means for paying out said mooring cable and operatively connecting said means for paying out said mooring cable with said means for moving said movable member, means responsive to an increase of the tension on said plummet cable for releasing said mine casing from said anchor and actuating said means for filling said anchor casing with liquid, a timer control for releasing said locking mechanism after a predetermined interval of time and paying out said mooring cable, and means actuatable by said stop member for locking said means for paying out said mooring cable in response to engagement by said movable member in said opposite direction to position said mine casing at a depth below the surface determined by said adjustable stop member.

13. A submarine mine comprising a buoyant mine casing, an anchor housing, means for detachably mounting said mine casing on said anchor housing, means actuatable for filling said anchor housing with a liquid, a mooring cable contained within said anchor housing and having one end attached to said mine casing, a plummet, a plummet cable also contained within said anchor housing and having one end attached to said plummet, a movable member, means responsive to paying out of said plummet cable for moving said movable member in one direction, means responsive to a decrease of tension on said plummet cable on contact of the plummet with the bottom of a body of liquid for preventing said mooring cable from paying out, means responsive to either a decrease or increase of tension on said plummet cable for releasing said mine casing from said anchor and actuating said means for filling said anchor with liquid, means for releasing said preventing means after a predetermined interval of time for paying out said mooring cable, means responsive to paying out of said mooring cable for moving said member in the opposite direction, an adjustable stop member positioned in the path of travel of the said movable member and engageable thereby only when moving in the opposite direction, and means actuatable by engagement of said stop member by said movable member for preventing further paying out of said mooring cable.

14. A submarine mine comprising a buoyant mine casing, an anchor housing, means for detachably mounting said mine casing on said anchor housing, means for filling said anchor housing with a liquid, a mooring cable contained within said anchor housing and having one end attached to said mine casing, a plummet, a plummet cable contained within said anchor housing and having one end attached to said plummet, a movable member, means for moving said member, a control lever operatively associated with said plummet cable for movement in one direction responsive to a decrease of tension thereon and movement in the other direction responsive to an increase of tension thereon, means responsive to paying out of said plummet cable for driving said means for moving said movable member in one direction, linkage means operatively connected with said control lever and actuated by movement thereof in one direction for preventing said mooring cable from paying out and concurrently releasing said mine casing from said anchor and filling said anchor with liquid, means for releasing said preventing means after a predetermined interval of time for paying out said mooring cable, means actuated only by movement of said control lever in one direction and responsive to paying out of said mooring cable for driving said means for moving said member in the opposite direction, an adjustable stop member positioned in the path of travel of said movable member and engageable thereby only when moving in the opposite direction, and means actuated by engagement of said stop member by said movable member for preventing further paying out of said mooring cable.

15. A submarine mine comprising a buoyant mine casing, an anchor housing, means for detachably mounting said mine casing on said anchor housing, means actuatable for filling said anchor housing with liquid when said casing is separated from said housing, one drum having a mooring cable wound thereon with one end of said cable attached to said mine casing, a plummet releasably mounted on said housing, another drum having a cable secured and wound thereon with one end of said cable attached to said plummet, a control lever pivotally mounted in said housing, means for releasing said plummet and subsequently releasing said control lever from a neutral position after launching of the mine, a locking rod connected to said control lever, means for resiliently urging said control lever and locking rod in one direction, a pulley mounted on said control lever and having said plummet cable trained thereover for urging said control lever in the opposite direction responsive to tension on said plummet cable, a locking pawl mounted on said locking rod and positioned to engage said one drum to prevent rotation thereof on movement in said one direction in response to a decrease of tension in said plummet cable, means for releasing said locking pawl from engagement with said drum after a predetermined time interval, a lever mechanism for releasing said mine casing from said anchor housing and actuating said means for filling, a shoulder on said control lever operatively engaging said lever mechanism in response to either an increase or decrease of tension in said plummet cable, a movable member, drive means operable for moving said member in one direction responsive to paying out of said plummet cable from said other drum, said drive means being actuated only by movement of said conrtol lever in said one direction in response to a decrease in tension on said plummet cable for moving said member in the opposite direction responsive to paying out of said mooring cable from said one drum, an adjustable stop member positioned in the path of travel of said movable member and engageable thereby only when moving in said opposite

direction, and another locking pawl actuated by said stop member and positioned to engage said one drum and prevent further rotation thereof.

16. A submarine mine comprising a buoyant mine casing, an anchor housing, means for detachably mounting said mine casing on said anchor housing, a mooring cable drum mounted within said casing, a mooring cable wound around said drum and having one end attached to said mine casing, a plummet, a plummet cable drum mounted within said anchor housing, a plummet cable secured to and wound around said plummet drum and having one end attached to said plummet, a pivotally mounted wheel mounted on said anchor housing and adapted to move subsequent to launching of said mine, a bell crank, means actuated by movement of said wheel and adapted to releasably engage said bell crank, means for resiliently urging said bell crank in one direction, means for retarding the movement of said bell crank in said one direction, means connected to said bell crank and releasably engaging said plummet, a control lever pivotally mounted within said housing, a locking rod connected to said control lever, means resiliently urging said locking rod and control lever in one direction toward said mooring cable drum, a pulley mounted on said control lever, said plummet cable being trained around said pulley to urge said control lever in the opposite direction when tension is exerted on said plummet cable, means on said bell crank for releasably engaging and maintaining said control lever in a neutral position, a locking pawl mounted on said locking rod, means on said mooring cable drum engageable by said locking pawl for preventing rotation thereof, a screw shaft, a traveller mounted on said screw shaft for axial movement corresponding to rotary movement of said screw shaft, means for rotating said shaft and moving said traveller in one direction in response to paying out of said plummet cable and in the opposite direction in response to paying out of said mooring cable, a depth setting rod slideably mounted for movement parallel to the axis of said screw shaft, an adjustable stop member mounted on said depth setting rod and positioned in the path of travel of said traveller and engageable thereby only when moving in said opposite direction, a lever mechanism actuated by said depth setting rod and including a pawl for locking said mine cable drum, a release mechanism, a shoulder on said control lever engaging said release mechanism and operative by movement thereof in either direction for releasing said mine casing from said anchor housing, and a shifting mechanism operatively connected to said control lever and actuated by movement thereof in said one direction for engaging said means for rotating said screw shaft in response to paying out of said mooring cable.

References Cited in the file of this patent

UNITED STATES PATENTS

1,151,902	Rey	Aug. 31, 1915
1,346,309	Elia	July 13, 1920
1,505,997	Elia	Aug. 26, 1924