Dec. 13, 1938. W. J. GRANDMAN 2,140,007

AUTOMATIC PASTE DISPENSER

Filed July 8, 1938 2 Sheets-Sheet 1

Fig. 1.

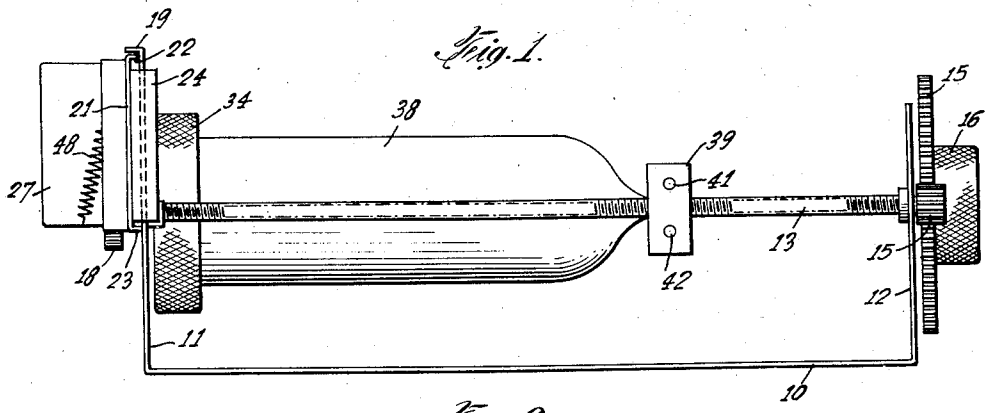

Fig. 2.

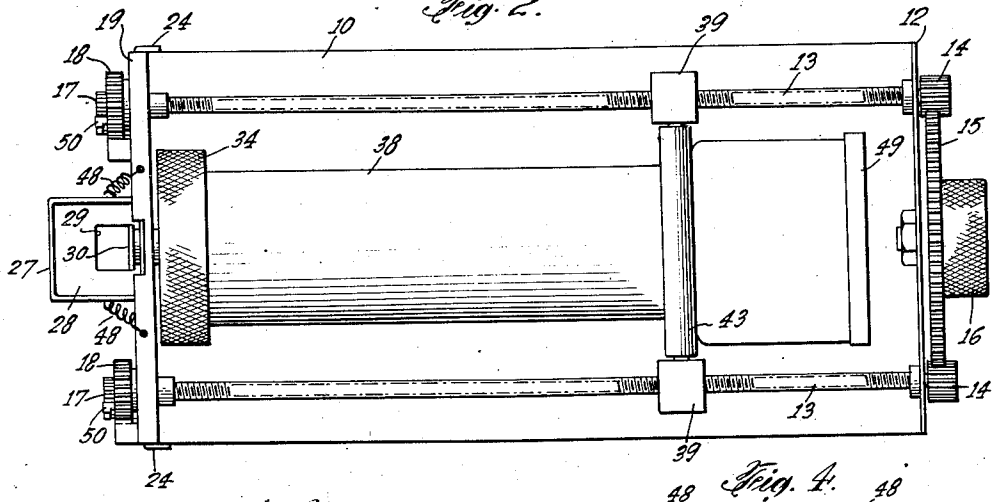

Fig. 3.

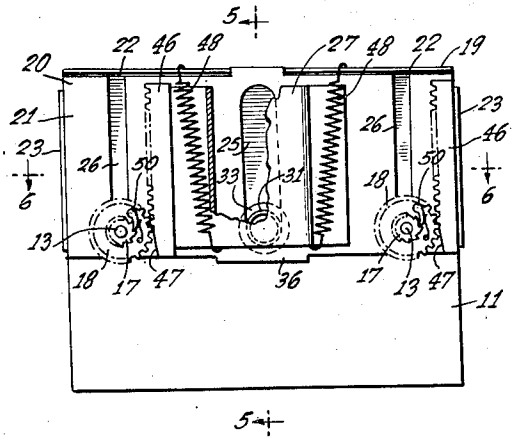

Fig. 4.

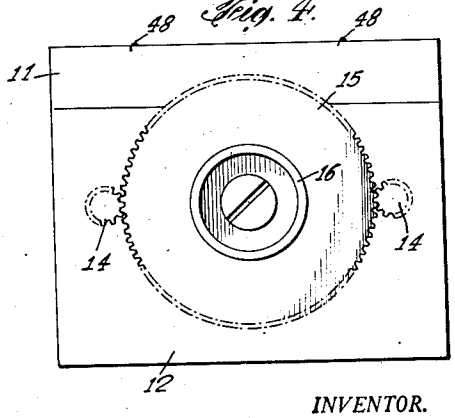

INVENTOR.
WALTER J. GRANDMAN.
BY J. Ledermann
ATTORNEYS.

Dec. 13, 1938. W. J. GRANDMAN 2,140,007

AUTOMATIC PASTE DISPENSER

Filed July 8, 1938 2 Sheets-Sheet 2

Fig. 5.

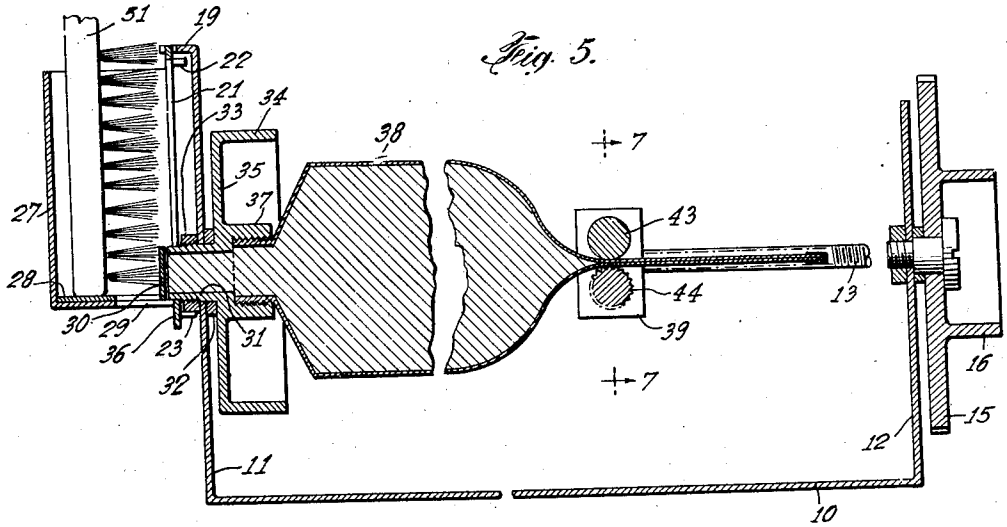

Fig. 6.

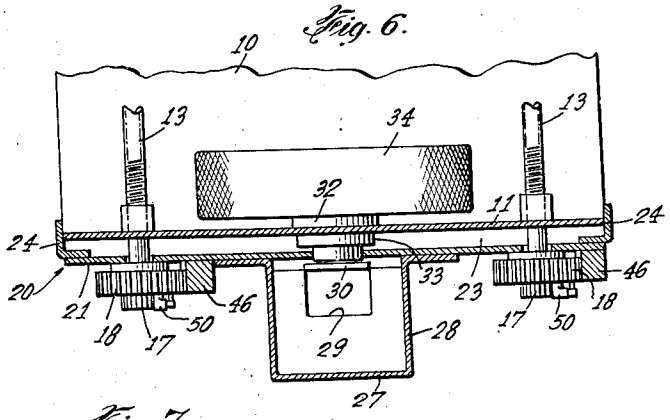

Fig. 7.

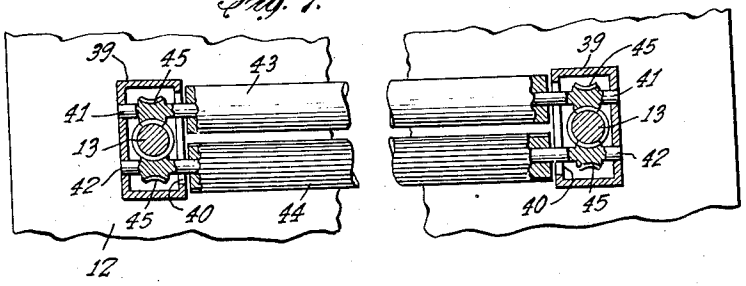

INVENTOR.
WALTER J. GRANDMAN
BY J. Lederman
ATTORNEYS.

Patented Dec. 13, 1938

2,140,007

UNITED STATES PATENT OFFICE

2,140,007

AUTOMATIC PASTE DISPENSER

Walter J. Grandman, New York, N. Y.

Application July 8, 1938, Serial No. 218,040

7 Claims. (Cl. 221—60)

The main object of this invention is the provision of a practical and simple device adapted to have a paste tube secured therein and to dispense the contents at a convenient point in predetermined quantities which, in the case of toothpaste, are of such a quantity as would commonly be used on a toothbrush.

In the example of the invention which is illustrated in the drawings and described below, a dispenser for toothpaste is set forth, but it is to be distinctly understood that the invention may be carried out in the form of a dispenser for any other substance which is furnished on the market in so-called collapsible tubes, and it is therefore not desired to limit the invention to the form illustrated and described.

The above and other objects will become apparent in the description below, in which characters of reference refer to like-named parts in the accompanying drawings.

Referring briefly to the drawings, Figure 1 is a side elevational view of the device.

Figure 2 is a plan view of the same.

Figure 3 is a front elevational view of the same, partly in section.

Figure 4 is a rear elevational view of the same.

Figure 5 is a cross-sectional view taken on the line 5—5 of Figure 3, showing a tooth brush inserted.

Figure 6 is a cross-sectional view taken on the line 6—6 of Figure 3.

Figure 7 is a cross-sectional view taken on the line 7—7 of Figure 5.

Referring in detail to the drawings, the numeral 10 indicates the base of a widened U-shaped support or frame having the front wall 11 and the rear wall 12. In use, the device may be mounted on the base 10, but it may also be mounted in a position at right angles thereto with the base 10 secured to a wall by any suitable means, such as screws, not shown, with the wall 11 facing downward.

A pair of parallel spaced-apart screw-threaded rods or worms 13 are rotatably mounted in the opposite walls 11 and 12 and their extremities project through both walls. On the outer side of the wall 12, pinions 14 are rigid on the worms 13. Between the pinions 14 a gear 15, in mesh with both pinions 14 and having a knurled flange 16 rigid thereon and concentric therewith, is rotatably mounted in the wall 12.

On the outside of the wall 11, ratchets 17 are rigid on the worms 13, and adjacent these ratchets gears 18 are loosely mounted on the worms. The upper edge 19 of the wall 11 is turned outward at right angles. A slide 20 is mounted on the wall 11, and comprises essentially a plate 21 extending the width of the wall, having its top edge 22 and its bottom edge 23 both bent at right angles toward the wall, and having projecting tongues 24 on its side edges bent at right angles around the side edges of the wall 11. The top and bottom edges 22 and 23 serve to keep the plate 21 at a distance from the wall 11.

The plate 21 has a relatively wide vertical slot 25 at its center and near the side edges a pair of relatively narrow vertical slots 26, these three slots extending throughout the height of the plate between its upper and lower edges 22 and 23, respectively. A housing 27, rectangular in horizontal cross-section and open at the top, is secured about the center slot 25. The floor or the platform 28 of this housing has a cut-out 29 therein formed by cutting out a flap 30 on three sides, the flap 30 being then turned up at right angles to provide a seal for the open end of the paste tube, as will presently become apparent. Midway between the axes of the worms 13, an opening is provided in the wall 11 in which a sleeve 31 is rotatably mounted with its ends projecting from both sides of the wall 11. An enlarged knurled flange 34 is rigid on and concentric with the sleeve 31 on the inside of the wall 11, and a spacer washer 32 lies between the disc portion 35 of the flange 34 and the wall 11. A portion of the sleeve 31 which lies between the plate 21 and the wall 11, is threaded and receives a threaded-lock-and spacer-washer 33. The outer end of the sleeve 31 is slightly reduced and projects through the slot 25. The center portion 36 of the lower edge 23 of the plate 21 is cut out on its sides and extends downward in the plane of the plate 21 in the form of a tongue or projection, in order to slightly lengthen the slot 25. Integral with the sleeve 31 inside the flange 34 is an internally threaded collar 37, the threading of the same being complementary with that of a standard paste tube cap so that the threaded stem of the tube 38 may be screwed home thereinto.

On each of the worms 13, between the walls 11 and 12, frames or casings 39 are mounted which have openings 40 therein facing each other. Mounted in the mutually opposed walls of these casings, one above and one below these worms 13, are the axles 41 of a pair of rollers 43 and 44. The latter is shown corrugated and the former smooth-surfaced, although both may be of either finish. Rigid on the axles 41 and 42 of these rollers, are concave pinions 45 in mesh with the worms 13.

Adjacent each loose gear 18 is a vertical rack 46 integral with the plate 21, whose teeth are adapted to engage the teeth of the gears 18. The lower ends of the toothed sides of these racks slope away from the line of rack teeth, as shown at 47. Pawls 50, pivotally mounted on the gears 18, engage the ratchets 17 when the gears 18 turn in a clockwise direction (Figure 3) and ride loosely thereover upon rotation of the gears in the opposite direction. Coiled springs 48, having their upper ends secured in the top edge 19 of the wall 11 and their lower ends in the floor of the housing 27, normally urge the entire slide 20 into its uppermost position, and in this position the racks 46 are free of engagement with the gears 18 because of the above-mentioned slopes 47.

In using the device, the knurled flange 16 is first rotated to bring the rollers 43 and 44 close to the wall 12. Then, with the tube cap removed from the tube 36, the stem of the latter is screwed home into the collar 37 by rotation of the flange 34. The tube is then held in such position as to keep its bottom edge 49 between the rollers 43 and 44 as the latter are moved in the opposite direction by rotation of the flange 16 in the opposite direction. As soon as a sufficient length of the tube edge 49 has been thus clamped between the rollers, the device is ready for use.

A toothbrush 51 shown in broken lines, is inserted through the open top of the housing 27 and pushed down against the floor 28 of the latter. As soon as the slide 20 has thus been depressed a short distance against the pull of the springs 48, the racks 46 will engage the loose gears 18, and continued depression of the slide will cause rotation of the gears 18 in a clockwise direction (Figure 3) and consequently rotation of the worms 13 in the same direction, and again consequently, advancement of the rollers 43 and 44 toward the front wall 11. As the rollers thus advance, they will ride up on the tube 36 and squeeze a quantity of paste out through the sleeve 31 onto the brush 51. As the surface of the brush has been riding past the paste outlet while the paste has been forced out, the paste will have been spread evenly along the length of the brush. When the brush is raised, the springs 48 will restore the slide 20 to its uppermost position, and just before it reaches that position, the flap 30 will begin to cover the sleeve outlet, in the uppermost position of the slide 20 the flap 30 will completely seal the sleeve outlet, as shown.

The rollers 43 and 44 might be loosely mounted in their end casings 39 without being geared to the worms 13 the casings 39 being instead threadably engaged with the worms, and the device will function equally well, but in that case some means, not shown, must be provided to retain the tube edge 49 in horizontal position between the rollers to hold the tube taut in order to prevent buckling of that portion of the tube between the rollers and the wall 11.

Obviously, numerous modifications in form and structure may be made without departing from the spirit and scope of the invention.

I claim:

1. A device of the class described comprising a base having end walls extending at right angles therefrom, a pair of spaced-apart parallel worms rotatably mounted in said walls, a carriage bridging said worms and having a pair of mutually parallel spaced-apart rollers threadably engaging said worms, one of said walls having an opening therethrough and a sleeve rotatably mounted in and projecting through both sides of said opening, a threaded collar integral with said sleeve on its inner end, the said axis of said opening lying in the same plane as the axes of said worms, a vertically slidable slide mounted on the outside of said wall and having a vertical slot therein in alignment with said opening, resilient means normally urging said slide to its extreme upward position, the bottom of said slot in said position of the slide registering with said opening, means partly on said worms and partly on said slide for rotating said worms upon depression of said slide, said rotation of said worms causing said roller carriage to advance toward said wall, said device being adapted to have the threaded stem of a paste tube screwed into said collar and the body of said tube secured between said rollers.

2. A device of the class described comprising a base having end walls extending at right angles therefrom, a pair of spaced-apart parallel worms rotatably mounted in said walls, a carriage bridging said worms and having a pair of mutually parallel spaced-apart rollers threadably engaging said worms, one of said walls having an opening therethrough and a sleeve rotatably mounted in and projecting through both sides of said opening, a threaded collar integral with said sleeve on its inner end, the said axis of said opening lying in the same plane as the axes of said worms, a vertically slidable slide mounted on the outside of said wall and having a vertical slot therein in alignment with said opening, resilient means normally urging said slide to its extreme upward position, the bottom of said slot in said position of the slide registering with said opening, means partly on said worms and partly on said slide for rotating said worms upon depression of said slide, said rotation of said worms causing said roller carriage to advance toward said wall, said device being adapted to have the threaded stem of a paste tube screwed into said collar and the body of said tube secured between said rollers, an upright flap on said platform adjacent said wall adapted to seal the outer end of said sleeve when said slide is in said uppermost position.

3. A device of the class described comprising a base having end walls extending at right angles therefrom, a pair of spaced-apart parallel worms rotatably mounted in said walls, a carriage bridging said worms and having a pair of mutually parallel spaced-apart rollers threadably engaging said worms, one of said walls having an opening therethrough and a sleeve rotatably mounted in and projecting through both sides of said opening, a threaded collar integral with said sleeve on its inner end, the said axis of said opening lying in the same plane as the axes of said worms, a vertically slidable slide mounted on the outside of said wall and having a vertical slot therein in alignment with said opening, resilient means normally urging said slide to its extreme upward position, the bottom of said slot in said position of the slide registering with said opening, means partly on said worms and partly on said slide for rotating said worms upon depression of said slide, said rotation of said worms causing said roller carriage to advance toward said wall, said device being adapted to have the threaded stem of a paste tube screwed into said collar and the body of said tube secured between said rollers, and means on the other of said

walls for rotating said worms in the opposite direction to move said carriage toward said last-named wall.

4. A device of the class described comprising a base having end walls extending at right angles therefrom, a pair of spaced-part parallel worms rotatably mounted in said walls, a carriage bridging said worms and having a pair of mutually parallel spaced-apart rollers threadably engaging said worms, one of said walls having an opening therethrough and a sleeve rotatably mounted in and projecting through both sides of said opening, a threaded collar integral with said sleeve on its inner end, the said axis of said opening lying in the same plane as the axes of said worms, a vertically slidable slide mounted on the outside of said wall and having a vertical slot therein in alignment with said opening, resilient means normally urging said slide to its extreme upward position, the bottom of said slot in said position of the slide registering with said opening, means partly on said worms and partly on said slide for rotating said worms upon depression of said slide, said rotation of said worms causing said roller carriage to advance toward said wall, said device being adapted to have the threaded stem of a paste tube screwed into said collar and the body of said tube secured between said rollers, an upright flap on said platform adjacent said wall adapted to seal the outer end of said sleeve when said slide is in said uppermost position, and means on the other of said walls for rotating said worms in the opposite direction to move said carriage toward said last-named wall.

5. A device of the class described comprising a base having end walls extending at right angles therefrom, a pair of spaced-apart parallel worms rotatably mounted in said walls, a carriage bridging said worms and having a pair of mutually parallel spaced-apart rollers threadably engaging said worms, one of said walls having an opening therethrough and a sleeve rotatably mounted in and projecting through both sides of said opening, a threaded collar integral with said sleeve on its inner end, the said axis of said opening lying in the same plane as the axes of said worms, a vertically slidable slide mounted on the outside of said wall and having a vertical slot therein in alignment with said opening, resilient means normally urging said slide to its extreme upward position, the bottom of said slot in said position of the slide registering with said opening, means partly on said worms and partly on said slide for rotating said worms upon depression of said slide, said rotation of said worms causing said roller carriage to advance toward said wall, said device being adapted to have the threaded stem of a paste tube screwed into said collar and the body of said tube secured between said rollers, said inner end of said sleeve having a widened knurled flange thereon surrounding said collar.

6. A device of the class described comprising a base having end walls extending at right angles therefrom, a pair of spaced-apart parallel worms rotatably mounted in said walls, a carriage bridging said worms and having a pair of mutually parallel spaced-apart rollers rotatably mounted therein, one of said walls having an opening therethrough and a sleeve rotatably mounted in and projecting through both sides of said opening, a threaded collar integral with said sleeve on its inner end, the axis of said opening lying in the same plane as the axes of said worms, a vertically slidable slide mounted on the outside of said wall and having a vertical slot therein in alignment with said opening, resilient means normally urging said slide to its extreme upward position, the bottom of said slot in said position of the slide registering with said opening, means partly on said worms and partly on said slide for rotating said worms upon depression of said slide, said rotation of said worms causing said roller carriage to advance toward said wall, means for rotating said rollers in mutually opposite directions upon said advance of said carriage toward said wall, said device being adapted to have the threaded stem of a paste tube screwed into said collar and the body of said tube secured between said rollers.

7. A device of the class described comprising a base having end walls extending at right angles therefrom, a pair of spaced-apart parallel worms rotatably mounted in said walls, a carriage bridging said worms and having a pair of mutually parallel spaced-apart rollers rotatably mounted therein, one of said walls having an opening therethrough and a sleeve rotatably mounted in and projecting through both sides of said opening, a threaded collar integral with said sleeve on its inner end, the axis of said opening lying in the same plane as the axes of said worms, a vertically slidable slide mounted on the outside of said wall and having a vertical slot therein in alignment with said opening, resilient means normally urging said slide to its extreme upward position, the bottom of said slot in said position of the slide registering with said opening, means partly in said worms and partly on said slide for rotating said worms upon depression of said slide, said rotation of said worms causing said roller carriage to advance toward said wall, means for rotating said rollers in mutually opposite directions upon said advance of said carriage toward said wall, said device being adapted to have the threaded stem of a paste tube screwed into said collar and the body of said tube secured between said rollers, and means on the other of said walls for rotating said worms in the opposite direction to move said carriage toward said last-named wall.

WALTER J. GRANDMAN.