66541 6 SPRUSON & FERGUSON

AUSTRALIA

PATENTS ACT 1990

PATENT REQUEST: STANDARD PATENT

I/We, the Applicant(s)/Nominated Person(s) specified below, request I/We be granted a patent for the invention disclosed in the accompanying standard complete specification.

[70,71] Applicant(s)/Nominated Person(s):

Citation Medical Corporation, incorporated in Delaware, of 230 Edison Way, Reno, Nevada, 89502, UNITED STATES OF AMERICA

[54] Invention Title:

Endoscope with I.ternal Light Source

[72] Inventor(s):

John B. Clayton, Darryl J. Bornhop, George H. Middle

[74] Address for service in Australia:

Spruson & Ferguson, Patent Attorneys
Level 33 St Martins Tower
31 Market Street
Sydney New South Wales Australia (Code SF)

Details of Basic Application(s):

[31] Appl'n No(s):	[33] Country:	[32] Application Date:
891,888	US	1 June 1992

DATED this SEVENTEENTH day of JUNE 1993

Citation Medical Corporation

By: J. Spruson.

Registered Patent Attorney

IRN: 237772

INSTR CODE: 64228

AUSTRALIAN PATENT OFFICE

5845/2

SPRUSON & FERGUSON

Australia

Patents Act 1990

NOTICE OF ENTITLEMENT

I, George H. Middle, of Citation Medical Corporation, 230 Edison Way, Reno, Nevada, 89502, United States of America, being authorised by the Applicant/Nominated Person in respect of an application entitled:

Endoscope with Internal Light Source

state the following:-

The Applicant/Nominated Person has entitlement from the actual inventor(s) as follows:-

The Applicant/Nominated Person is the assignee of the actual inventor(s).

The Applicant/Nominated Person is entitled to rely on the basic application(s) listed on the Patent Request as follows:

The Applicant/Nominated Person is the assignee of the basic applicant(s).

The basic application(s) listed on the Patent Request is/are the first application(s) made in a Convention country in respect of the invention.

DATED this 18th day of May 1993.

CITATION MEDICAL CORPORATION

George H. Middle

Vice President

IRN: 237772

INSTR CODE: 64228

AU9338310

(12) PATENT ABRIDGMENT (11) Document No. AU-B-38310/93
(19) AUSTRALIAN PATENT OFFICE (10) Acceptance No. 665416

(54) Title
ENDOSCOPE WITH INTERNAL LIGHT SOURCE

International Patent Classification(s)
(51)[5] **A61B 001/06**

(21) Application No. : **38310/93** (22) Application Date : **30.04.93**

(30) Priority Data

(31) Number	(32) Date	(33) Country
891888	**01.06.92**	**US UNITED STATES OF AMERICA**

(43) Publication Date : **02.12.93**

(44) Publication Date of Accepted Application : **04.01.96**

(71) Applicant(s)
CITATION MEDICAL CORPORATION

(72) Inventor(s)
JOHN B. CLAYTON; DARRYL J. BORNHOP; GEORGE H. MIDDLE

(74) Attorney or Agent
SPRUSON & FERGUSON , GPO Box 3898, SYDNEY NSW 2001

(57) Claim

1. A compact, hand-held endoscope assembly for examining an internal structure of a body, comprising:

a handle housing sized to be held in a user's hand;

a disposable scope assembly including a base detachably connected to the handle housing, and a tubular probe having a proximal end and having a distal end insertable into a body for examining the internal structure of the body, the proximal end being attached to said base;

an image guide disposed within said probe, said image guide having a distal end in light communication with an opening at the distal end of said probe, and said image guide having a proximal end exposed to said handle housing, for gathering light from the internal structure and guiding the light from the distal end to the proximal end;

means mounted within said handle housing in light communication with said proximal end of said image guide, for providing an image of the internal structure of the body;

an illumination optical fiber bundle disposed within said probe, said optical fiber bundle having a distal end exposed at a distal end of said probe for illuminating the structure, and said optical fiber bundle having a proximal end within the base and exposed at said handle housing;

light transmitting means disposed within said handle housing and aligned with said proximal end of said optical fiber bundle; and

.../2

a high intensity, low power, miniature source of light mounted within said handle housing and aligned with said light transmitting means whereby said light transmitting means transmits substantially all of said light received from said light source to said proximal end of said optical fiber bundle.

21. A hand-held portable endoscope for viewing an internal body structure, comprising:

a scope assembly including an elongated scope having a proximal end and a distal end insertable into a body for examining the internal structure thereof, the scope comprising an optical fiber image guide for gathering light from the internal structure and guiding the light through the scope, the scope further comprising a plurality of optical illumination fibers positioned next to the image guide for illuminating the body structure;

a hand-held housing detachably connected to the proximal end of the scope for supporting the scope, the housing including a camera head in light communication with the image guide for generating a signal representative of the light from the internal structure;

a light source including a light bulb mounted in the housing and connected to a power source;

means for transmitting light from the light bulb to the optical illumination fibers to provide light for illuminating the internal structure; and

heat dissipation means for dissipating heat from the housing generated by the light bulb, wherein:

the image guide also has a proximal end associated with proximal ends of the illumination fibers in a base of the disposable scope assembly, so that when the disposable scope assembly is mounted to the housing, the light transmitting means in the housing is lined up with the image generating means in the housing, the alignment feature occurring at the interface between the scope base and the handle housing.

665416 S & F Ref: 237772

AUSTRALIA

PATENTS ACT 1990

COMPLETE SPECIFICATION

FOR A STANDARD PATENT

ORIGINAL

Name and Address of Applicant: Citation Medical Corporation
230 Edison Way
Reno Nevada 89502
UNITED STATES OF AMERICA

Actual Inventor(s): John B. Clayton, Daryl J. Bornhop, George H. Middle

Address for Service: Spruson & Ferguson, Patent Attorneys
Level 33 St Martins Tower, 31 Market Street
Sydney, New South Wales, 2000, Australia

Invention Title: Endoscope with Internal Light Source

The following statement is a full description of this invention, including the best method of performing it known to me/us:-

TECHNICAL FIELD

The present invention relates generally to medical devices and more particularly to endoscopes. The present invention is particularly although not exclusively related to an improved endoscope construction such as for an arthroscope in which a light source for the endoscope assembly is internally mounted within a hand-held housing of the arthroscope.

BACKGROUND OF THE INVENTION

Modern medical techniques which are relatively non-invasive have been recently developed for viewing and performing different medical procedures on the interior structure of body parts. Medical instruments for performing these procedures are known generally as endoscopes and specifically include arthroscopes, spinalscopes, laproscopes, esophagoscopes and others. These instruments typically include a scope which is inserted into the body part to be examined. With an arthroscope, for example, the scope is coupled to a camera assembly and the camera assembly, in turn, is connected to a video display for generating a picture of the interior structure of the joint. Consequently, the operator of the arthroscope is able to view, in real-time, the interior structure of the body as the scope is inserted into the body. By viewing the internal body structure, a diagnosis can be made and appropriate treatment prescribed.

For illuminating the interior body structure, the scope of an endoscope instrument or endoscope assembly of an instrument includes optical illumination fibers that terminate at the distal or viewing end of the scope and direct light into the body. The optical illumination fibers in turn, are coupled to a high power light source that includes a light bulb (i.e. xenon or metal halide). Such a light source, because of its size, power and control requirements is typically mounted externally to the probe

and hand-held components of the endoscope. With an arthroscope, for instance, the scope of the endoscope and a portion of the camera assembly are mounted in a hand-held housing, and the light source is external to this housing in a separate console.

Such an arrangement necessitates a flexible light transmissive conduit which connects the external light source to the illumination fibers within the scope assembly. These types of light transmissive conduits must be precisely connected to the scope assembly and to the external light source. This complicates the construction of the arthroscope assembly. In addition, such a flexible conduit can detract from the portability of the arthroscope and can limit the range of motion of the scope and hand-held housing of the arthroscope.

AUSTRALIAN PATENT OFFICE

Summary of the Invention

It is the object of the present invention to overcome or substantially ameliorate the above disadvantages.

There is disclosed herein a compact, hand-held endoscope assembly for examining an internal structure of a body, comprising:

a handle housing sized to be held in a user's hand;

a disposable scope assembly including a base detachably connected to the handle housing, and a tubular probe having a proximal end and having a distal end insertable into a body for examining the internal structure of the body, the proximal end being attached to said base;

an image guide disposed within said probe, said image guide having a distal end in light communication with an opening at the distal end of said probe, and said image guide having a proximal end exposed to said handle housing, for gathering light from the internal structure and guiding the light from the distal end to the proximal end;

means mounted within said handle housing in light communication with said proximal end of said image guide, for providing an image of the internal structure of the body;

an illumination optical fiber bundle disposed within said probe, said optical fiber bundle having a distal end exposed at a distal end of said probe for illuminating the structure, and said optical fiber bundle having a proximal end within the base and exposed at said handle housing;

light transmitting means disposed within said handle housing and aligned with said proximal end of said optical fiber bundle; and

a high intensity, low power, miniature source of light mounted within said handle housing and aligned with said light transmitting means whereby said light transmitting means transmits substantially all of said light received from said light source to said proximal end of said optical fiber bundle.

There is further disclosed herein an endoscope assembly for viewing an internal body structure, comprising:

a scope assembly including an elongated disposable scope having a proximal end and a distal end insertable into a body for examining the internal structure thereof, the scope including an optical fiber image guide having a distal end for gathering light from the internal structure and guiding the light through the scope, the scope further including a plurality of optical illumination fibers positioned next to the image guide for illuminating the structure;

a hand-held housing detachably connected to the proximal end of the scope for supporting the scope, the housing including an image generating means in light communication with the image guide for generating an image of the internal structure;

an internal light source mounted within the housing and including a miniature light bulb connected to a power source;

AUSTRALIAN PATENT OFFICE

means for transmitting light from the light bulb to the optical illumination fibers for transmission to the distal end of the scope to provide light for illuminating the internal structure; and

heat dissipation means for dissipating heat generated by the light bulb from the housing, wherein:

the image guide also has a proximal end associated with proximal ends of the illumination fibers in a base of the disposable scope assembly, so that when the disposable scope assembly is mounted to the housing, the light transmitting means in the housing is lined up with the image generating means in the housing, the alignment feature occurring at the interface between the scope base and the handle housing.

There is further disclosed herein a hand-held portable endoscope for viewing an internal body structure, comprising:

a scope assembly including an elongated scope having a proximal end and a distal end insertable into a body for examining the internal structure thereof, the scope comprising an optical fiber image guide for gathering light from the internal structure and guiding the light through the scope, the scope further comprising a plurality of optical illumination fibers positioned next to the image guide for illuminating the body structure;

a hand-held housing detachably connected to the proximal end of the scope for supporting the scope, the housing including a camera head in light communication with the image guide for generating a signal representative of the light from the internal structure;

a light source including a light bulb mounted in the housing and connected to a power source;

means for transmitting light from the light bulb to the optical illumination fibers to provide light for illuminating the internal structure; and

heat dissipation means for dissipating heat from the housing generated by the light bulb, wherein:

the image guide also has a proximal end associated with proximal ends of the illumination fibers in a base of the disposable scope assembly, so that when the disposable scope assembly is mounted to the housing, the light transmitting means in the housing is lined up with the image generating means in the housing, the alignment feature occurring at the interface between the scope base and the handle housing.

In an illustrative embodiment of the invention, the endoscope is constructed as an arthroscope for examining the joints of the body. Alternatively the inventive concepts disclosed herein may be used in connection with other types of endoscopes and medical instruments for viewing other body structures (i.e. spinalscopes, laproscopes, esophagoscopes).

The preferred endoscope assembly, generally stated, includes, a hand-held housing having an internal light source, an arthroscope scope assembly coupled to the light

AUSTRALIAN PATENT OFFICE

source, and a camera assembly. The internal light source includes a micro light and light transmitting means for

AUSTRALIAN PATENT OFFICE

efficiently transmitting light from the micro light to light illumination fibers mounted within the arthroscope scope assembly. The light transmitting means may include an integrating sphere, a parabolic reflecting mirror, a tapered light conduit, and an illumination GRIN lens. This construction utilizes essentially all of the light generated by the micro light and eliminates a separate external light source and a light conduit from the housing to the light source. Heat elimination means is also provided for eliminating heat generated by the micro light within the housing.

Typically, the scope assembly of the arthroscope provides a conduit for light for illuminating the internal body structure and a return conduit for images from the internal body structure. The scope assembly is disposable and detachably mounted to the housing and may be malleable, flexible or semi-flexible in construction depending on the application. The scope assembly includes a cylindrically shaped GRIN lens attached to an image guide. The image guide collects the image and transfers this image from a front plane (i.e. image at the GRIN lens of the internal body structure) to another plane depending upon the length of the image guide. The image guide is optically coupled to focusing optics which in turn are optically coupled to the camera assembly. An externally mounted camera control unit controls operation of the camera assembly. In addition, the camera control unit can control a CRT or other visual display device to display an image of the internal structure of the joint.

An arthroscope constructed in accordance with the invention is portable and can be hand held by the physician or other medical personnel. In several alternate embodiments of the invention arthroscopes can be constructed to be totally portable and may include an internal power source. Moreover arthroscopes may be constructed with an internal source, an internal power

AUSTRALIAN PATENT OFFICE

source, and a microscopic eye piece and be totally self contained.

BRIEF DESCRIPTION OF THE DRAWINGS

The novel features of this invention, as well as the invention itself, both as to its structure and its operation, will be best understood from the accompanying drawings, taken in conjunction with the accompanying description, in which similar reference characters refer to similar parts.

Figure 1 is a perspective view of a portable endoscope constructed in accordance with the present invention with an internal light source and showing a prior art external light source in phantom;

Figure 2 is a partial cross-sectional view taken along section line 2-2 of Figure 1;

Figure 2A is an enlarged portion of Figure 2 of a front tube component of the housing for mounting the light source;

Figure 3A-3D are schematic views illustrating various light sources for an endoscope constructed in accordance with the present invention;

Figure 4A-4D are schematic views illustrating various heat dissipation means for the arthroscope of Figure 1;

Figure 5A-5C are schematic views illustrating several alternate embodiments of arthroscopes constructed in accordance with the present invention; and

Figure 5D is a prior art arthroscope having an external light source showing a light transmittive connection to the external light source.

DESCRIPTION OF PREFERRED EMBODIMENT

With reference to Figure 1, an arthroscope 10 is adapted to be inserted into an entry site 12 such as into a knee 14 of a patient 16 to examine the internal structure of the knee 14. A prior art arthroscope would be in light

communication via optical conduit 18 to an external light source 20 that may include a high powered quartz, halogen, or metal halide lamp. These optical conduit 18 and light source 20 components (18,20) are shown in dashed lines because they are replaced by an internal light source of the invention.

Figure 1 also shows that the arthroscope 10 is electrically connected via electrical line 22 to a camera control unit 24. Camera control unit 24, is in turn, electrically connected to a cathode ray tube (CRT) 26 and to a video camera recorder (VCR) 28, for respectively displaying and recording a video image of the internal structure of the knee 14.

Referring now to Figure 2, the improved arthroscope 10 is shown in cross section and includes a housing 30, a disposable arthroscope scope assembly 32 detachably mounted to the housing 30, and a camera assembly 34 mounted within the housing 30. An internal light source 35 including a micro light 36 or miniature light bulb is also mounted within the housing 30 in light communication with the arthroscope scope assembly 32. The internal light source 35 also includes light transmitting means 39 for transmitting light from the micro light 36 to the arthroscope scope assembly 32. The light transmitting means 39 is adapted to maximize transmission of the light from the micro light 36 to the scope assembly 32 and may include a number or all of the components to be hereinafter described.

The construction of the scope assembly 32 and camera assembly 34 are essentially the same as the arthroscope described in more detail in ~~application serial~~ U.S. Patent number ~~07/651,746~~ 5,411,500 entitled "Portable Arthroscope With Disposable Probe", assigned to the assignee of the present application and included herein by reference.

Briefly stated, the arthroscope scope assembly 32 includes a scope 38 that is adapted for insertion at the

AUSTRALIAN PATENT OFFICE

entry site 12 of a joint such as the knee 12 (Figure 1). The scope 38 may be constructed as a malleable, flexible or semi-flexible member. As such it may include a metal cannula, or a flexible polyimide tube as an outer member. In addition, the arthroscope scope assembly 32 is disposable and may be removably attached to the housing 30 using a threaded ring clamp 40. Such a threaded ring clamp 40 is more particularly described in the above cited patent application. In general such a ring clamp 40 provides a removable attachment for attaching the arthroscope scope assembly with the optical components in a proper alignment.

The arthroscope scope assembly 32 also includes a plurality of illumination fibers 42 (Figure 2A) mounted within the scope 38. The illumination fibers 42 are embedded within an epoxy material 44, and terminate at a viewing or distal end 46 of the scope 38 of the arthroscope scope assembly 32 for providing illumination for viewing the interior of a joint such as the knee 14 (Figure 1). The illumination fibers 42 are joined in a fiber bundle 48 (Figure 2).

A front tube 52 is mounted within the housing 30. The front tube 52 is generally cylindrical in shape and is removably attached to the housing 30. The light source 35 is mounted within the front tube 52. The front tube 52 also houses a sapphire window 54 in light communication with an image guide 58 of the scope 38. The sapphire window 54 in turn, is in light communication with focusing optics 56 mounted within the front tube 52.

The focusing optics 56 are mounted in an optics base 60 slidingly mounted in the front tube 52. Thus, an image from the image guide 58 which has passed through the sapphire window 54 can enter the focusing optics 56. As previously stated the image guide 58 functions to transfer an image from the plane of a GRIN lens attached to the distal or viewing end of the image guide 58 to the focusing optics 56. Preferably, the focusing optics 56 magnify

light from the sapphire window 54 several times (i.e. 7X) and focus this light onto a camera head 62 which is also mounted within the housing 30. In a preferred embodiment the camera head 62 is a charged coupled device (CCD).

Referring now to Figure 2A the front tube 52, light source 35, and light transmitting means 39 are shown in schematic form. The internal light source 35 includes the micro light 36 mounted along a center line 72. The internal light source 35 also includes the light transmitting means 39 for transmitting light from the micro light 36 to the illumination fibers 48 of the illumination fiber bundle 48 of the scope 38.

The light transmitting means 39 may include a fiber optic taper 80 that funnels light from the micro light 36 into the illumination fiber bundle 48. The light transmitting means may also include a parabolic reflecting mirror 84 for reflecting some of the light output from the micro light 36 onto the illumination fiber bundle. In addition, the light transmitting means 39 may include an illumination GRIN lens 50 juxtaposed to a proximal end of the illumination fiber bundle 42 for collecting and channeling light into the fiber bundle 42. With a disposable scope 38 such a GRIN lens 50 would be integrated into illumination optics located within the housing 30. Finally the light transmitting means may include an integrating sphere 86. Such an integrating sphere 86 may be in the form of a coated spherical bulb that functions to collect all of the light from an internal light source and allows the light to escape through a single opening.

The micro light bulb 36 is preferably a miniature light bulb of the type that produces a relatively high output for its size. By way of example and not limitation, a 5VDC, 1.4 A, Halogen technical lamp such as a focused lens end lamp, that produces approximately 20,000 LUX output is suitable for this application. An external power line 112 (Figure 2) may be provided for the micro light 36.

With such a micro light 36 as a light source it is essential that most of the output of the micro light 36 be transmitted to the illumination fiber bundle 48.

Figure 3A-3D illustrate various constructions for the micro light 36 and light transmitting means 39. With reference to Figure 3A, a parabolic reflecting mirror 84 is positioned around a micro light 36' to reflect light from the micro light 36'. The reflecting mirror 84 is shaped as a paraboloid of revolution. The parabolic reflecting mirror 84 forms the reflected light into a column of light which is passed through a focusing lens 68 and focused on the illumination fiber bundle 48. The focusing lens 68 may be in the form of an aspherical lens.

With reference to Figure 3B a micro light 36'' may be in light communication with a taper section 80 which is adapted to funnel light from the micro light 36'' into the illumination fiber bundle 48. The taper section 80 may be formed of a fiber optic material having and an antireflection (AR) coating. Such an AR coating may be selected to reduce reflection losses (i.e Fresnel) occurring at the surface of the taper section 80. Moreover the taper section 80 may be formed with a taper angle which closely matches the numerical aperture (N.A.) of the illumination fiber bundle 48 (or a GRIN lens rod 50 attached to the illumination fiber bundle 48). This taper angle enables an illumination output cone from the taper section 80 to be directed at the illuminating fiber bundle 48 at a known angle of illumination. As an example such a micro light 36'' may be a commercially available bulb having an integral focusing lens.

With reference to Figure 3C, a focusing lens light bulb 36''' may be adapted to focus light trough a focal plane 49 and a GRIN rod 50 and onto the illumination fiber bundle 48. Such a focusing lens light bulb 36''' may also be a bulb with an integral focusing lens.

With reference to Figure 3D a light bulb 36'''' may include an integrating sphere 86 coated inside with a highly reflective white coating. A small uncoated area 88 on the spherical bulb allows light to escape only at selected angles. These angles are chosen to be within the N.A. of the illuminating fibers 42 of the illumination fiber bundle 48.

With any of the arrangements shown in Figures 3A-3D, essentially all of the light output from the micro light 36 is transmitted to the illumination fiber bundle 48. The objective is to collect the maximum light energy and transfer this light to the illumination fiber bundle 48. This light then travels through the individual illumination fibers 42 of the fiber bundle 48 and out the viewing end 46 of the flexible scope 40 to illuminate the internal structure of the body. This light is then collected by the image guide 58 of the scope 38 and transmitted through the sapphire window 54 and focusing optics 56 to form an image of the body.

In addition to providing the above structures for a micro light 36 and light transmitting means 39 shown in Figure 3A-3D for transmitting light from the micro light 36 to the illumination fiber bundle 48, it is also advantageous to overdrive the micro light 36 into the color spectrum best suited for the arthroscope 10. In general such a shift is into the blue visible light area and away from the infra-red light area. This shift also increases the total photon flux.

Using a micro light 36 and light transmitting means 39 (Figure 3A-3D) constructed in accordance with the invention the final light output at the viewing end 46 of the flexible scope assembly 32 is equivalent to that of an external light source which uses a high powered Xenon or Metal Halide light bulb. With such external systems it is not unusual to lose up to 98% of the original light energy

by the time it has been transmitted to the point of application.

To enable the use of a micro light 36 in an endoscope system such as arthroscope 10 having a relatively small illuminating bundle 48 and to produce a high quality image, it is also necessary that the light collecting system (i.e., image guide 58) and imaging system relating to the camera assembly 62 (CCD) be optimized. Some system parameters which can be controlled to achieve these results include the following.

1. Utilizing an image collecting lens such as a GRIN lens that has a matching index with the image guide 58 (Figure 2) at their common interface.

2. Coating the sapphire lens 54 (Figure 2) with an anti-reflection material (AR) to reduce surface reflection losses.

3. The focusing optics 56 (Figure 2) or relay lens system, either fixed or zoom design, must be optically designed to suit all the input and output parameters of the imaging system.

4. To balance the illumination system micro computer electronic shuttering of the CCD 62 (Figure 2) video output must be accomplished. This enables the optical system to be more sensitive to changes in illumination on the CCD 62 surface, and yields an improved image onto a CRT 26 for recording onto the VCR 28 (Figure 1).

5. White balance selection, either automatic or manual, can be used for electronic comparison of this color to set the spectral color content (or spectral balance) of the picture. This feature is essential if a micro light 36 not having the ideal light spectrum in the visual range, is to be made acceptable.

6. The image level signal/noise ratio must be optimized for producing a high quality video image.

In addition to the above-described structure and operational parameter for a light source 35 and light

transmitting means 39, an essential part of the present invention is to be able to dissipate heat generated by the micro light 36 in its confined space within the housing 30. This can be done passively by conducting the heat away or by cooling with a coolant. Four methods are illustrated in Figures 4A-4D for dissipating heat.

1. As shown in Figure 4A, heat can be dissipated by using conventional methods of convecting the heat away. These conventional methods include:

A. Conducting heat from the micro light 36 to the housing 30 where it is convected away using a conductive medium such as thermal grease.
B. Selectively shaping the housing 30 (i.e. added thickness) to spread heat more evenly and to conduct the heat away.
C. Ribbing the housing 30 for dissipating and radiating the heat away.
D. Coating the inside of the housing 30 with a black material for heat absorption.
E. Plating the outside of the front tube 52 with a black surface for radiation of heat.
F. Plating the outside of the camera assembly 34 bright aluminum for reflection of heat from the camera assembly 34.

2. As shown in Figure 4B heat can also be dissipated by using a chemical transfer method such as a hollow tube or a heat pipe 90 filled with a low vapor pressure, low boiling point liquid that is adapted to carry heat away from the housing.

3. As shown in Figure 4C heat can also be dissipated by installing a Peltier semiconductor heat pump chip 92 and heat pipe 114.

4. As shown in Figure 4D heat can be dissipated by using a separate lamp holder 116 that clips to external cables 96 connected to the housing 30.

ALTERNATE EMBODIMENT

Referring now to Figures 5A-5C several alternate embodiment endoscope assemblies or arthroscopes constructed in accordance with the present invention are shown.

In general to make a cableless, totally self contained endoscope, a battery pack may be utilized together with a microscopic eyepiece.

With reference to Figure 5A, an arthroscope 100 includes battery pack 102 as an internal power source and an eyepiece 104. Such an arthroscope 100 may also include an internal light source 36 as previously explained. With reference to Figure 5B arthroscope 106 may include an eyepiece 104 and a battery pack 108 formed as a handle.

With reference to Figure 5C an arthroscope 110 may include an eyepiece 104 and a power line 112 to an external power source. As comparison and with reference to Figure 5D the cable assembly of a prior art arthroscope 114 typically includes;

a. camera control unit cable 118 to the camera assembly;

b. a heavy fiber optics illumination cable 120.

With an arthroscope constructed in accordance with the invention the heavy and expensive fiber optic cable 118 is eliminated as the internal light source 35 provides the light. With an externally powered internal light source 35 this fiber optic cable 120 can be replaced by a small power cable 112 (Figure 5C). With the embodiments having an internal power source (100-Fig 5A, 106-Fig 5B) the power cable is also eliminated

Thus an endoscope can be constructed in accordance with the invention with an internal light source. Such and endoscope may be constructed and produce an image that is equivalent to images produced with endoscopes having large external light sources.

While the particular endoscope as herein shown and disclosed in detail is fully capable of obtaining the objects and providing the advantages herein before stated, it is to be understood that they are merely illustrative of the presently preferred embodiments of the invention and that no limitations are intended to the details of

construction or design herein shown other than as described in the appended claims.

The claims defining the invention are as follows:

1. A compact, hand-held endoscope assembly for examining an internal structure of a body, comprising:

a handle housing sized to be held in a user's hand;

a disposable scope assembly including a base detachably connected to the handle housing, and a tubular probe having a proximal end and having a distal end insertable into a body for examining the internal structure of the body, the proximal end being attached to said base;

an image guide disposed within said probe, said image guide having a distal end in light communication with an opening at the distal end of said probe, and said image guide having a proximal end exposed to said handle housing, for gathering light from the internal structure and guiding the light from the distal end to the proximal end;

means mounted within said handle housing in light communication with said proximal end of said image guide, for providing an image of the internal structure of the body;

an illumination optical fiber bundle disposed within said probe, said optical fiber bundle having a distal end exposed at a distal end of said probe for illuminating the structure, and said optical fiber bundle having a proximal end within the base and exposed at said handle housing;

light transmitting means disposed within said handle housing and aligned with said proximal end of said optical fiber bundle; and

a high intensity, low power, miniature source of light mounted within said handle housing and aligned with said light transmitting means whereby said light transmitting means transmits substantially all of said light received from said light source to said proximal end of said optical fiber bundle.

2. An endoscope as recited in claim 1, further comprising heat dissipation means for dissipating heat generated by the light source.

3. An endoscope as recited in claim 2, wherein the light transmitting means includes an integrating sphere for directing light from the light source at the optical illumination fiber.

4. An endoscope as recited in claim 2, wherein the light transmitting means includes an optical taper section for transmitting light from the light source into the optical illumination fiber at an angle which matches a numerical aperture (N.A.) of the optical illumination fiber.

AUSTRALIAN PATENT OFFICE

5. An endoscope as recited in claim 2 and wherein the light transmitting means includes a GRIN lens having a matching N.A. with the optical illumination fiber and adapted to transfer light from the light source onto the optical illumination fiber.

6. An endoscope as recited in claim 2 and wherein the light source includes a light bulb and the light transmitting means includes a parabolic reflecting mirror with a focusing lens mounted around the light bulb and adapted to receive light from the light bulb and reflect the light in a column onto the optical illumination fiber.

7. An endoscope as recited in claim 2 and further comprising a conduit for providing power to the light source from an external source.

8. An endoscope as recited in claim 2 and further comprising a battery mounted to the housing for powering the light source.

9. An endoscope as recited in claim 8 and further comprising a microscopic lens mounted to the housing and adapted to view images from the scope assembly.

10. The endoscope as recited in claim 2 and wherein the endoscope is constructed as an arthroscope.

11. An endoscope assembly for viewing an internal body structure, comprising:

a scope assembly including an elongated disposable scope having a proximal end and a distal end insertable into a body for examining the internal structure thereof, the scope including an optical fiber image guide having a distal end for gathering light from the internal structure and guiding the light through the scope, the scope further including a plurality of optical illumination fibers positioned next to the image guide for illuminating the structure;

a hand-held housing detachably connected to the proximal end of the scope for supporting the scope, the housing including an image generating means in light communication with the image guide for generating an image of the internal structure;

an internal light source mounted within the housing and including a miniature light bulb connected to a power source;

means for transmitting light from the light bulb to the optical illumination fibers for transmission to the distal end of the scope to provide light for illuminating the internal structure; and

heat dissipation means for dissipating heat generated by the light bulb from the housing, wherein:

the image guide also has a proximal end associated with proximal ends of the illumination fibers in a base of the disposable scope assembly, so that when the disposable scope assembly is mounted to the housing, the light transmitting means in the housing is lined up with the image generating means in the housing, the alignment feature occurring at the interface between the scope base and the handle housing.

12. An endoscope as recited in claim 11, wherein the light transmitting means includes a GRIN lens mounted to an illumination system for the optical illumination fibers juxtaposed with a proximal end of the optical illumination fiber for directing light from the light bulb into the optical illumination fiber.

AUSTRALIAN PATENT OFFICE

13. An endoscope as recited in claim 11 and wherein the light transmitting means includes an optical taper section for channeling light from the light bulb into the optical illumination fiber at a desired angle that matches a N.A. of the optical illumination fiber.

14. An endoscope as recited in claim 11 and wherein the light transmitting means includes a parabolic mirror and focusing lens for gathering light from the light bulb and reflecting the light in a column onto the optical illumination fiber.

15. An endoscope as recited in claim 11 and wherein the light transmitting means includes an imaging lens for receiving light from the light bulb and focusing the light into the optical illumination fiber.

16. An endoscope as recited in claim 11 and wherein the light transmitting means includes an integrating sphere.

17. An endoscope as recited in claim 11, and wherein the heat dissipation means includes means for providing heat conduction to and heat convection away from the housing.

18. An endoscope as recited in claim 11, and wherein the heat dissipation means includes a heat pipe attached to the housing and filled with a liquid for transferring heat generated by the light source out of the housing.

19. An endoscope as recited in claim 11 and wherein the heat dissipation means includes a peltier heat pump and heat pipe attached to the housing.

20. An endoscope as recited in claim 11, wherein the heat dissipation means includes mounting the miniature light bulb on a separate holder attached to the housing.

21. A hand-held portable endoscope for viewing an internal body structure, comprising:

a scope assembly including an elongated scope having a proximal end and a distal end insertable into a body for examining the internal structure thereof, the scope comprising an optical fiber image guide for gathering light from the internal structure and guiding the light through the scope, the scope further comprising a plurality of optical illumination fibers positioned next to the image guide for illuminating the body structure;

a hand-held housing detachably connected to the proximal end of the scope for supporting the scope, the housing including a camera head in light communication with the image guide for generating a signal representative of the light from the internal structure;

a light source including a light bulb mounted in the housing and connected to a power source;

means for transmitting light from the light bulb to the optical illumination fibers to provide light for illuminating the internal structure; and

heat dissipation means for dissipating heat from the housing generated by the light bulb, wherein:

the image guide also has a proximal end associated with proximal ends of the illumination fibers in a base of the disposable scope assembly, so that when the disposable scope assembly is mounted to the housing, the light transmitting means in the housing is lined up with the image generating means in the housing, the alignment feature occurring at the interface between the scope base and the handle housing.

22. A hand-held portable endoscope as recited in claim 21, further comprising a battery mounted within the housing as a power source for the light bulb.

23. A hand-held portable endoscope as recited in claim 21, further comprising a lens coupled to the camera head for viewing an image produced by the scope assembly.

24. A hand-held portable endoscope as recited in claim 21, wherein the light bulb is overdriven by the power source.

25. A hand-held portable endoscope as recited in claim 21, wherein the light bulb includes an integral focusing lens adapted to focus light on a fiber optic taper having a taper angle that matches an N.A. of the illumination fibers.

26. A hand-held portable endoscope as claimed in claim 21, wherein the light bulb includes a parabolic reflecting mirror and an aspherical lens adapted to focus light onto the illumination fiber.

27. A hand-held portable endoscope as claimed in claim 21, wherein the light bulb includes a spherical bulb coated with a highly reflective coating and having an uncoated area adapted to allow light to escape at an angle that matches an N.A. of the illumination fibers.

AUSTRALIAN PATENT OFFICE

28. A hand-held portable endoscope as claimed in claim 21 and wherein an optical taper section channels light from the light bulb to the illumination fiber at a desired angle that matches an N.A. of the optical illumination fiber.

29. An endoscope substantially as hereinbefore described with reference to Fig. 1 (excluding prior art external light source) and Figs. 2 and 2A, or to Fig. 1 (excluding the prior art external light source) and any of Figs. 3A to 3D and any one of Figs. 4A to 4D, or to any one of Figs. 5A to 5C.

Dated 30 August, 1995
Citation Medical Corporation

Patent Attorneys for the Applicant/Nominated Person
SPRUSON & FERGUSON

AUSTRALIAN PATENT OFFICE

Endoscope with Internal Light Source

ABSTRACT

A hand-held endoscope (10) having an internal light source includes a housing (30) and a scope assembly (32) attached to the housing (30) which includes a disposable scope (38), a fiber optical image guide (58) and a plurality of optical illumination fibers formed in a fiber bundle (48). The scope (38) is insertable into a body for illuminating and imaging the internal structure of the body. The illumination fiber bundle (48) is in light communication with an internal light source (35) mounted within the housing (30). The light source (35) preferably includes a light bulb (36) and a light transmission means (39) that is adapted to direct light from the light bulb (36) into the illumination fiber bundle (48). The endoscope (10) is constructed to utilize essentially all of the light produced by the light bulb (36) and to remove heat generated by the light bulb (36).

Figure 2

30 04 93 38310.

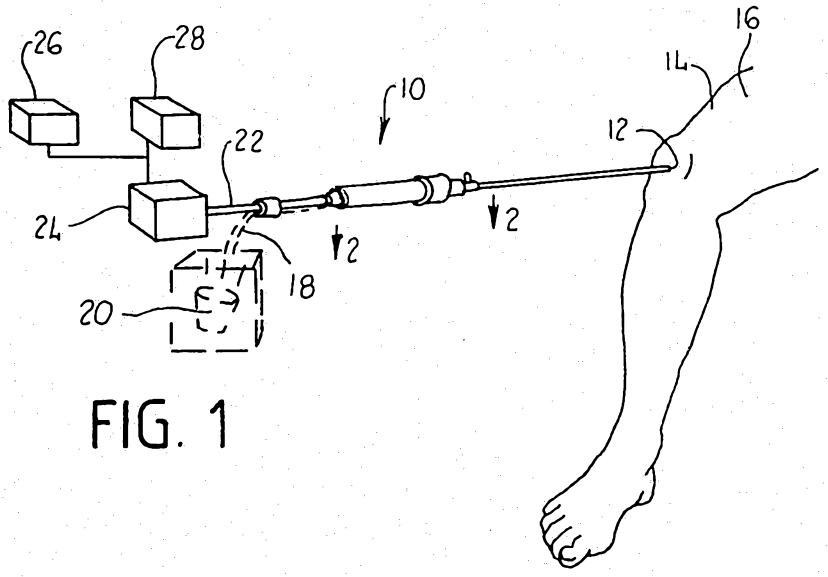

FIG. 1

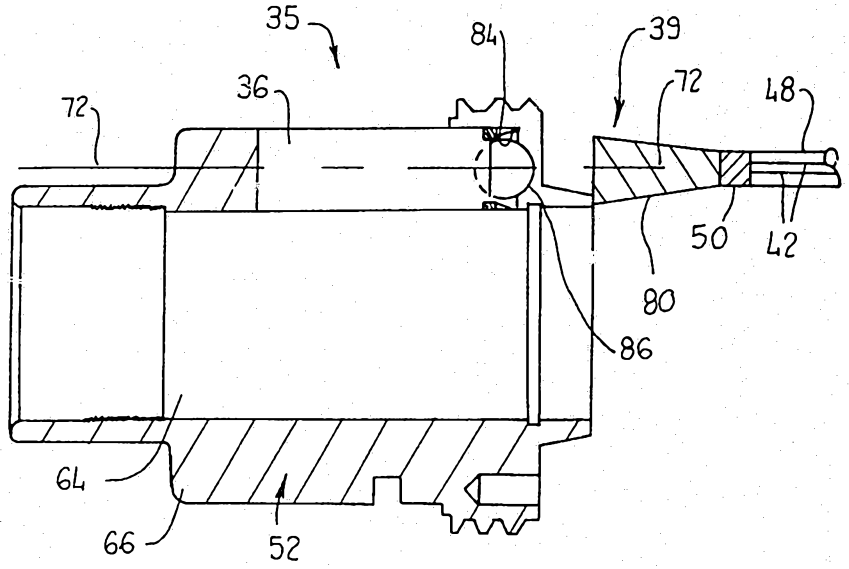

FIG. 2A

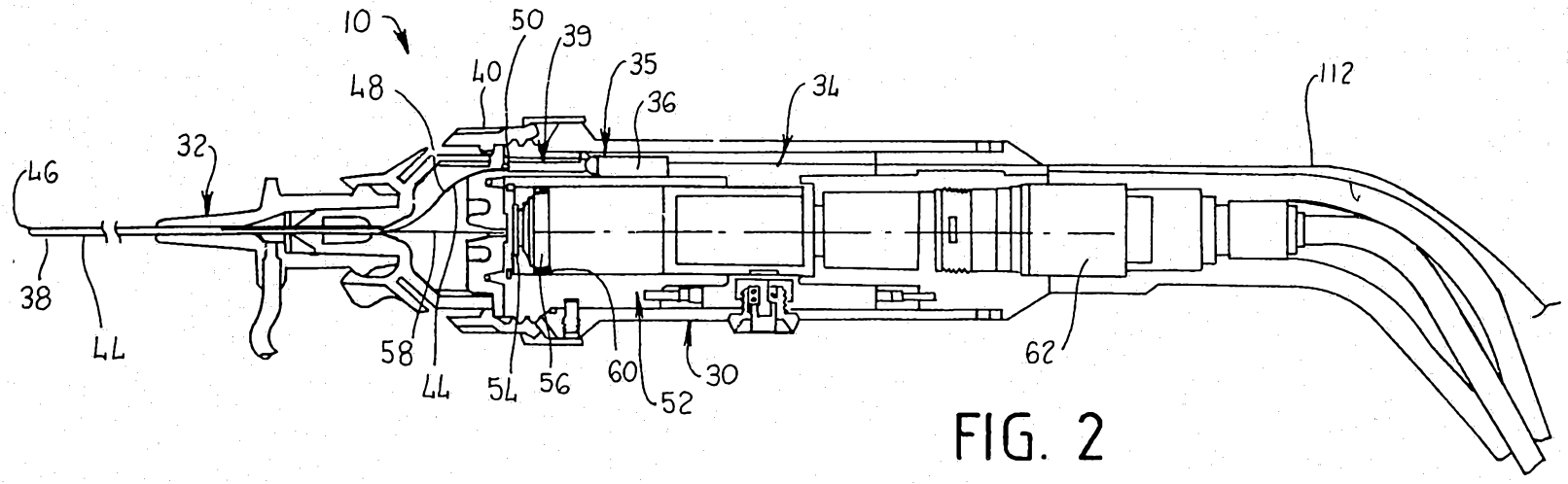

FIG. 2

38310/93

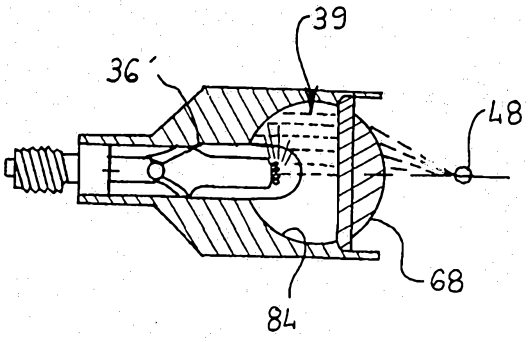

FIG. 3A

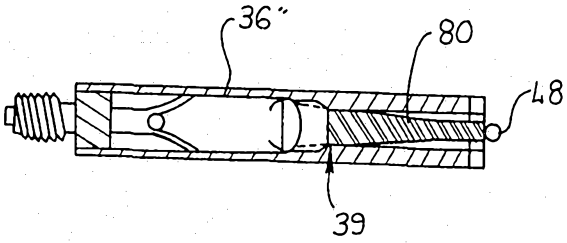

FIG. 3B

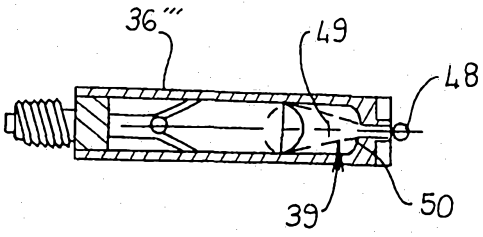

FIG. 3C

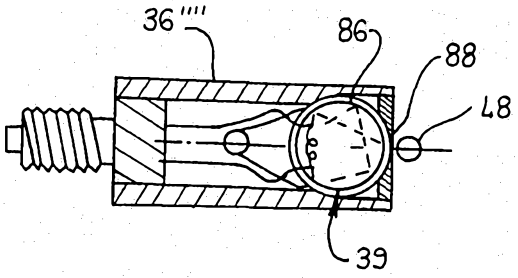

FIG. 3D

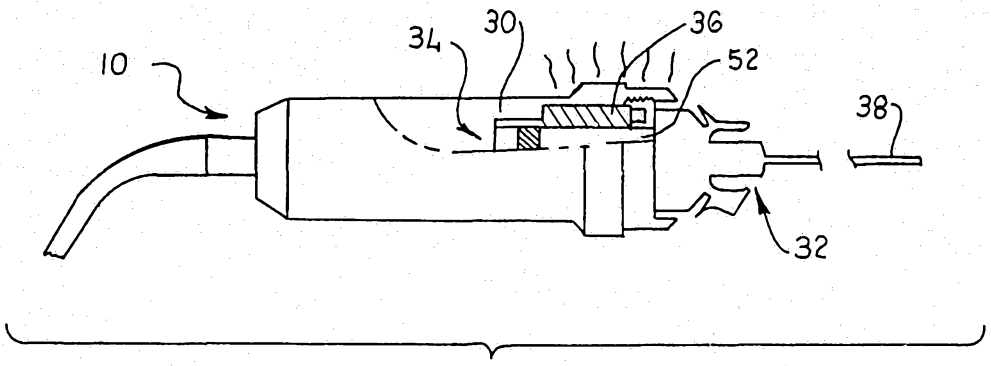

FIG. 4A

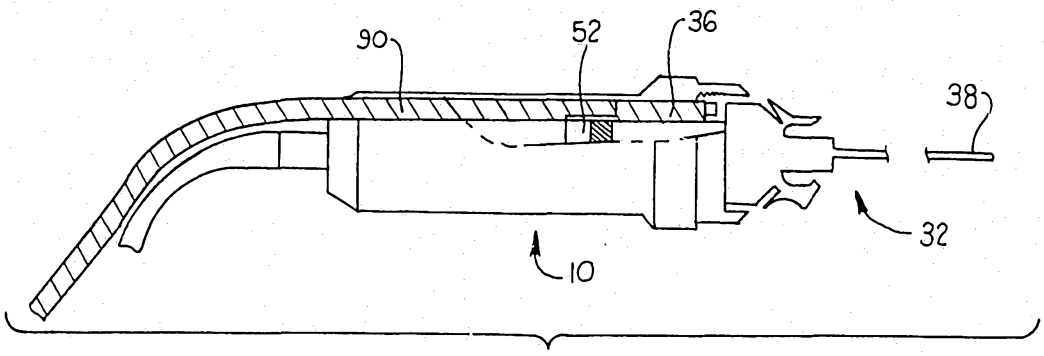

FIG. 4B

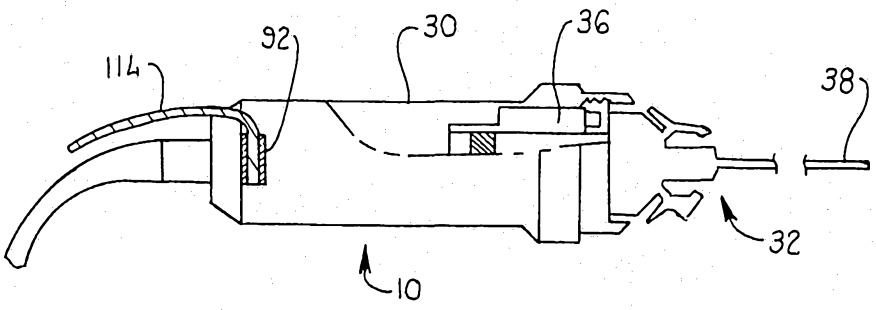

FIG. 4C

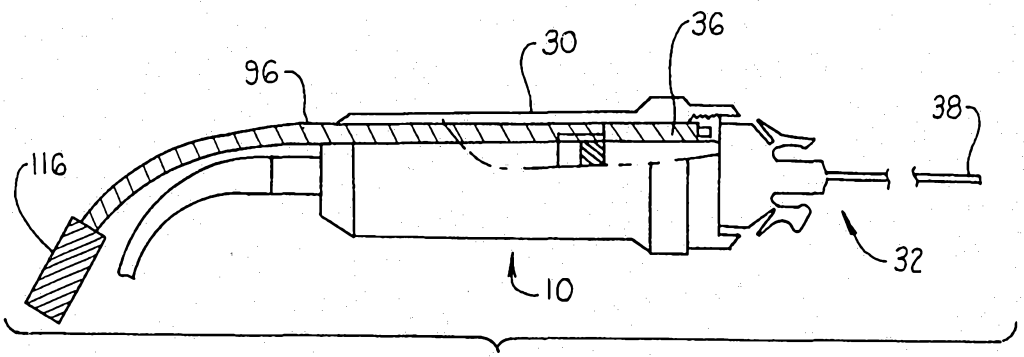

FIG. 4D

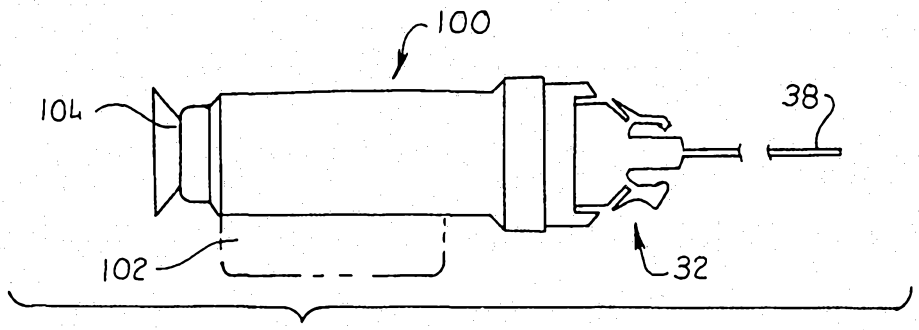

FIG. 5A

FIG. 5B

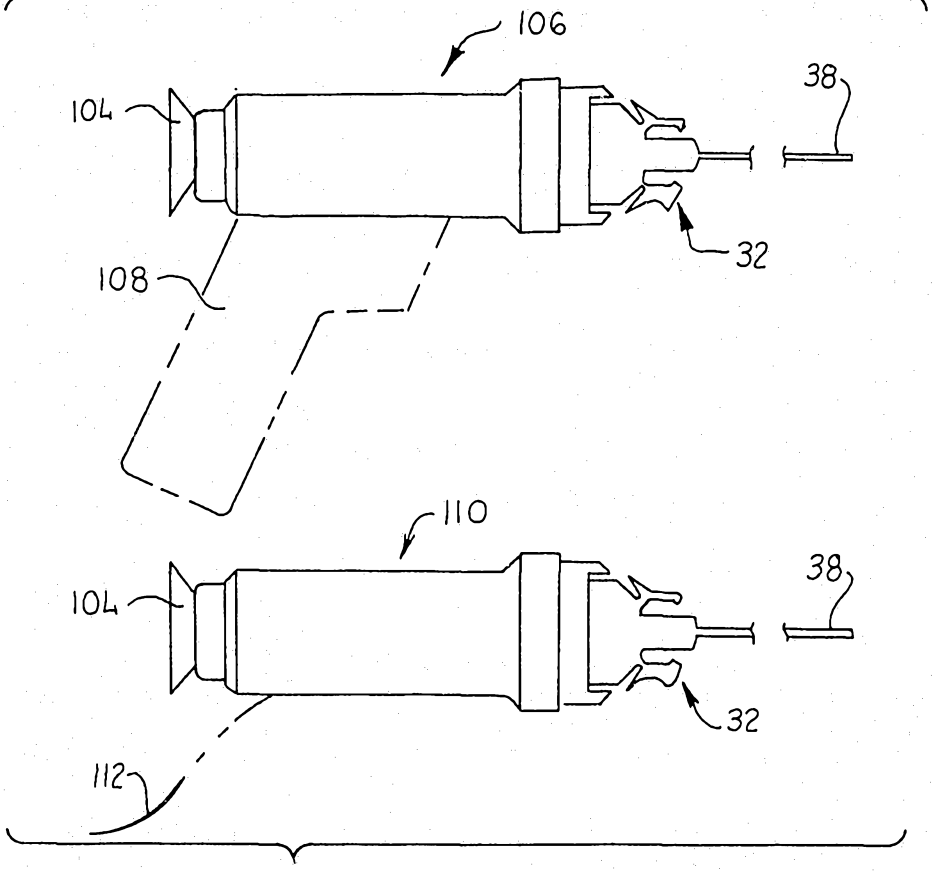

FIG. 5C

FIG. 5D (PRIOR ART)

