(19) DANMARK

(10) **DK 177888 B1**

(12) PATENTSKRIFT

Patent- og Varemærkestyrelsen

(51) Int.Cl.: *G 01 V 1/38 (2006.01)*

(21) Ansøgningsnummer: **PA 2012 70688**

(22) Indleveringsdato: **2012-11-09**

(24) Løbedag: **2011-05-10**

(41) Alm. tilgængelig: **2012-11-26**

(45) Patentets meddelelse bkg. den: **2014-11-10**

(86) International ansøgning nr: **PCT/US2011/035830**

(86) International indleveringsdag: **2011-05-10**

(85) Videreførelsesdag: **2012-11-09**

(30) Prioritet: **2010-05-19 US 12/783,374**

(73) Patenthaver: **Ion Geophysical Corporation, 2105 CityWest Boulevard, Houston, Texas 77042-2839, USA**

(72) Opfinder: **Daniel B. Seale, 5207 Camp Street, New Orleans, Louisiana 70115, USA**
Dale Lambert, 804 Fawn Drive, Mandeville, Louisiana TX-70448, USA

(74) Fuldmægtig: **Zacco Denmark A/S, Arne Jacobsens Allé 15, 2300 København S, Danmark**

(54) Benævnelse: **Seismic streamer shape estimation**

(56) Fremdragne publikationer:
US 4404664 A1
US 7403448 B2
US 2010/0118645 A1
US 2008/0074946 A1
US 2007/0127312 A1
DE 10237761 A1
US 4870626 A1
NO 20063182 A

(57) Sammendrag:
A seismic streamer system and associated methods for estimating the shape of a laterally steered seismic streamer. The streamer is divided into a series of contiguous streamer segments by lateral-steering devices. Heading sensors positioned in forward and aft portions of each segment produce heading readings. Each segment is modeled as having a linear shape in the forward portion and a curved shape in the aft portion. The shape of the segment is estimated according to the model from the heading readings on the segment.

Fortsættes ...

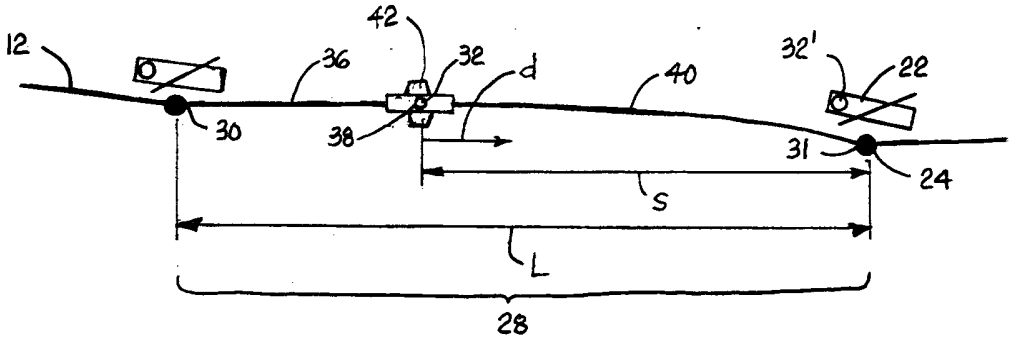

FIG. 2

SEISMIC STREAMER SHAPE ESTIMATION

BACKGROUND

The invention relates generally to marine seismic prospecting and more particularly to seismic streamer arrangements and methods for estimating the shapes of laterally steered streamers.

Seismic streamers towed by survey vessels and instrumented with hydrophones receiving seismic reflections are used in marine seismic surveys. The accuracy of the survey depends on an accurate estimate of the shape of each streamer. As the number of streamers towed behind survey vessels has increased, lateral-steering devices attached along the lengths of streamers are becoming a more common method of controlling streamer separations for more regular spatial sampling and for avoiding streamer entanglement. A known problem in estimating the shape of a laterally steered streamer is accounting for the local shape distortions caused by the lateral forces applied by the lateral-steering devices against the streamer. Typically, these devices kink the streamer, especially when applying a substantial lateral force to steer the streamer to port or starboard. The kink represents a discontinuity in the tangent to the streamer at the point on the streamer where the lateral force is applied. The magnitude of this local shape distortion increases as the tension in the streamer decreases toward its tail.

US4404664A discloses a marine cable positioning system which includes a plurality of magnetic compasses and a plurality of lateral positioning devices spaced at known intervals along the cable being towed by a marine vessel. Readings from the compasses together with readings from a magnetic compass and gyrocompass onboard the towing vessel are gathered and used with a selected reference heading to generate X-Y coordinates of the lateral positioning devices with respect to the towing vessel and selected reference heading. These coordinates are recorded and provided to a cathode ray tube for visual display of the relative position of each lateral positioning device with respect to the vessel and selected heading. Coded digital commands are generated and transmitted to each lateral positioning device for adjustment of its control surfaces whereby the lateral thrust produced the device as it is towed through the water is varied and the horizontal position of the portion of the cable to either side of the device controlled. Feedback of changes in

the cable's location are provided by updated compass readings and visual displays. Each lateral positioning device responds to a command for a specific adjustment of its control surfaces or for the return of the control surfaces to a neutral orientation where lateral thrust is not produced.

Thus, there is a need for better estimates of the shapes of laterally steered streamers.

SUMMARY

One version of a seismic streamer system embodying features of the invention comprises a seismic streamer that extends in length from a head end to a tail end. Lateral-steering devices attached to the streamer apply a lateral force at spaced apart steering positions along the length of the streamer. The lateral-steering devices divide the streamer into a series of contiguous streamer segments. Each segment extends from a fore end at a steering position to an aft end at the next consecutive steering position closer to the tail end of the streamer. A plurality of first and second heading sensors producing heading readings are disposed along the length of the streamer. Each of the first heading sensors is disposed in one of the streamer segments closer to the fore end than to aft end. Each of the second heading sensors is disposed in one of the streamer segments proximate the aft end of the

segment. Means for estimating streamer shape computes a shape estimate of the streamer segments as a function of the heading readings of the first and second heading sensors in the streamer segment.

In another aspect of the invention, a method for estimating the shape of a seismic streamer comprises: (a) attaching lateral-steering devices at spaced apart steering positions along the length of the seismic streamer to divide the streamer into a series of contiguous streamer segments between the steering positions of consecutive lateral-steering devices; (b) positioning first heading sensors providing first heading readings along a forward portion of each streamer segment; (c) positioning second heading sensors providing second heading readings along an aft portion of each segment proximate a lateral-steering device; and (d) computing an estimated shape of each streamer segment as a function of the first and second heading readings from the heading sensors in the streamer segment.

In yet another aspect of the invention, a method for estimating the shape of a seismic streamer steered laterally by lateral-steering devices disposed along the streamer's length comprises: (a) defining a series of contiguous streamer segments between the positions of consecutive lateral-steering devices; and (b) modeling the shape of each streamer segment as linear along a forward portion of the segment and as curved along an aft portion of the segment.

BRIEF DESCRIPTION OF THE DRAWINGS

These aspects and features of the invention, as well as its advantages, are better understood by referring to the following description, appended claims, and accompanying drawings, in which:

FIG. 1 is a top plan schematic view of a survey vessel towing laterally steered streamers in a streamer system embodying features of the invention; and

FIG. 2 is a top plan enlarged schematic view of a portion of one of the streamers of FIG. 1.

DETAILED DESCRIPTION

A seismic streamer system embodying features of the invention is shown in FIG. 1. A survey vessel 10 tows the plurality of streamer cables 12 whose tail ends 14 are tethered to tail buoys 16. Head ends 15 of the streamers 12 are attached to a system of tow cables and

tethers 18 attached to the rear deck of the vessel 10. Paravanes 20 are used to maintain a wide spread of the deployed streamer network. Lateral-steering devices 22—disposed at spaced apart steering positions 24, or steering nodes, e.g., every 300 m, along the length of each streamer—exert lateral forces 26 to drive the streamer to starboard or port. The lateral-steering devices 22 divide each streamer 12 into a series of contiguous streamer segments 28. Each segment extends rearward from a fore end 30 at a forward steering position 24 to an aft end 31 at the next consecutive steering position. The last, or rearmost, streamer segment 29, unlike the other segments, does not terminate at its aft end in a cable-steering device. Instead, its aft end is tethered to its tail buoy 16 on the sea surface. Heading sensors 32 are also attached to the streamer in each segment. The heading sensors may reside within the streamer itself, be housed in inline streamer control devices, or be housed in external streamer control devices, such as depth-control or lateral steering devices rotatably attached to the streamer. Each streamer segment has a heading sensor positioned closer to its fore end than to its aft end.

A controller 34 aboard the survey vessel 10 is connected to the heading sensors, lateral steering devices, and depth-control devices by a communications link such as a hardwired link running along the tow cables 18 and through the streamers 12. The controller receives readings from the heading sensors and other data from devices on the streamer and sends control commands to the lateral-steering devices and depth-control devices over the link as required.

As shown in the enlarged view of FIG. 2, the streamer 12 tends to distort, or kink, at the steering positions 24 because of the lateral force exerted by the lateral-steering device 22 against the streamer at these positions. Because of the tension in the streamer resulting from being towed through the water, the shape of each streamer segment 28 of length L between the steering position 24 of consecutive lateral-steering devices 22 is generally straight for the first 25%–50% of the segment and then curves gently in the direction of lateral movement in the rest of the segment. The curvature increases rearward along the segment to the aft steering position. The magnitude of the curvature depends on the amount of lateral force applied by the lateral-steering device at the aft end of the segment. Consequently, the shape of the streamer segments may be approximated by a linear portion 36 that extends from the fore end 30 to an intermediate point 38, which may coincide with the position of a heading

sensor 32 at the rear end of the linear portion, and by a contiguous curved region 40 that extends from the intermediate point to the aft end 31 of the segment.

The heading sensor 32 attached to the forward, linear portion 36 of the streamer segment may be a self-contained device within the streamer or be housed in a depth-control device 42 as shown or other kind of streamer control device. A second heading sensor 32' is disposed proximate the steering position 24 at the aft end of the segment. The second heading sensor 32' may be self-contained or housed in the lateral-steering device or in another streamer control device in front of the steering position, i.e., just ahead of the kink in the streamer.

Each segment is modeled from fore end to aft end as a linear portion 36 whose tangent equals the heading reading θ_1 of the heading sensor 32 in the forward portion of the segment and a contiguous curved portion 40 whose tangent is approximated by an exponential function that depends on the heading reading θ_1 of the forward heading sensor 32 and the heading reading θ_2 of the heading sensor 32' at the aft end. In the model, the tangent to the linear portion and to the curved portion are equal at their junction at the intermediate point 38. Thus, the model produces an estimated shape of the streamer section by computing tangents T to the forward, linear portion and to the aft, curved portion from the heading readings. The tangent T_L at each point on the linear portion is given by $T_L = \theta_1$. The tangent T_C to the curved portion at each point is given by $T_C = \theta_1 + (\theta_2 - \theta_1) \cdot (d/s)^p$, where s is the length of the curved portion, d is the distance of the point along the streamer segment measured rearward from the intermediate point, and p is an empirically determined exponent, e.g., 2.5. The ratio d/s is the percentage distance along the curved portion of each point on the curved portion. Because the last streamer segment 29 attached to the tail buoy does not terminate in a lateral-steering device, it is modeled as a linear segment whose tangent $T_L = \theta_1$.

The shipboard controller 34, which receives all the heading readings from the heading sensors, can compute a more or less real-time shape estimate of the streamers in a streamer-shape estimating software routine that implements the mathematical model. The shape of each of the streamers is a piecewise connection of the shapes of the individual streamer segments. The streamer shape may also be estimated off-line by data-processing

computers using the model on stored heading readings or later-refined heading readings. Either of these means for estimating streamer shape may be used.

Although the invention has been described in detail with respect to a few preferred versions, other versions are possible. For example, a heading sensor was shown in FIG. 2 as coincident with the intermediate point at the junction of the linear and curved portions of the streamer segment. But the heading sensor can be attached forward of the intermediate point anywhere in the forward, linear portion. So, as this example suggests, the versions described in detail are meant to exemplify features of the invention.

What is claimed is:

Patentkrav

1. Seismisk streamersystem, omfattende:
en seismisk streamer (12), der strækker sig i en længde fra en hovedende (15) til en bagerste ende (14);
en flerhed af sidestyreindretninger (22), der er fastgjort til den seismiske streamer (12), til påføring af en sidekraft ved styrepositioner (24), der er anbragt i afstand, langs længden af den seismiske streamer (12), hvor sidestyreindretningerne (22) inddeler den seismiske streamer (12) i en række af sammenhængende streamersegmenter (28), hvor hvert segment (28) strækker sig fra en forreste ende (30) ved en styreposition (24) til en agterende (31) ved den næste konsekutive styreposition tættere på den bagerste ende (14) af den seismiske streamer (12);
en flerhed af første kurssensorer (32), der er anbragt langs længden af den seismiske streamer (12), hvor hver af de første kurssensorer (32) er anbragt i et af streamersegmenterne (28) tættere på den forreste ende (30) end på agterenden (31) og frembringer kursaflæsninger (θ_1);
en flerhed af andre kurssensorer (32'), der er anbragt langs længden af den seismiske streamer (12), hvor hver af de andre kurssensorer (32') er anbragt i et af streamersegmenterne (28) nærmest agterenden (31) af streamersegmentet (28) og frembringer kursaflæsninger (θ_2); og
et middel til estimering af streamerformen, hvilket middel beregner en formestimering af hvert af streamersegmenterne (28) som en funktion af kursaflæsningerne (θ_1, θ_2) af den første og anden kurssensor (32, 32') anbragt i streamersegmentet (28), og
kendetegnet ved, at midlet udformer formen af hvert af streamersegmenterne (28) med en lineær del (36), der strækker sig fra den forreste ende (30) til et mellempunkt (38) mellem den forreste ende (30) og agterenden (31) og en buet del (40), der strækker sig fra mellempunktet (38) til agterenden (31).

2. Seismisk streamersystem ifølge krav 1, hvor hver af flerheden af andre kurssensorer (32') er indeholdt i en sidestyreindretning (22).

3. Seismisk streamersystem ifølge krav 1, hvor det seismiske streamersystem desuden omfatter en flerhed af streamerstyreindretninger, der er fastgjort til den seismiske streamer (12) i de forreste ender (30) af hvert af

streamersegmenterne (28) og indeholder flerheden af første kurssensorer (32).

4. Seismisk streamersystem ifølge krav 1, hvor den første kurssensor (32) i hvert streamersegment (28) er anbragt ved mellempunktet (38).

5. Seismisk streamersystem ifølge krav 1, hvor tangensen til den lineære del (36) er angivet ved kursaflæsningen (θ_1) af den første kurssensor (32) i streamersegmentet (28).

6. Seismisk streamersystem ifølge krav 1, hvor tangensen til den buede del (40) er en funktion af forskellen mellem kursaflæsningen (θ_1) af den første kurssensor (32) og kursaflæsningen (θ_2) af den anden kurssensor (32') i streamersegmentet (28).

7. Seismisk streamersystem ifølge krav 6, hvor forskellen mellem kursaflæsningen (θ_1) af den første kurssensor (32) og kursaflæsningen (θ_2) af den anden kurssensor (32') er eksponentielt skaleret af den procentvise afstand langs den buede del (40) af streamersegmentet (28) øget til en empirisk fastlagt eksponent.

8. Seismisk streamersystem ifølge krav 1, hvor det seismiske streamersystem desuden omfatter en halebøje (16), der er fastgjort til den bagerste ende (14) af den seismiske streamer (12) ved agterenden (31) af et sidste streamersegment (29), der strækker sig fra sidestyreindretningen (22) ved agterenden (31) af det sammenhængende segment (28), og hvor det sidste streamersegment (29) indeholder en kurssensor (32, 32').

9. Seismisk streamersystem ifølge krav 8, hvor midlet til estimering af en streamerform beregner en formestimering af det sidste streamersegment (29) som lineært med en tangens angivet ved kursaflæsningen (θ_1, θ_2) af kurssensoren (32, 32') anbragt i det sidste streamersegment (29).

10. Fremgangsmåde til estimering af formen af en seismisk streamer (12), hvilken fremgangsmåde omfatter:

fastgørelse af sidestyreindretninger (22) ved styrepositioner (24), der er anbragt i afstand, langs længden af en seismisk streamer (12) til inddeling af den seismiske streamer (12) i en række af sammenhængende streamersegmenter (28) mellem styrepositionerne (24) af konsekutive sidestyreindretninger (22);

positionering af første kurssensorer (32), der tilvejebringer første kursaflæsninger θ_1, langs en fremadgående del af hvert streamersegment (28);

positionering af andre kurssensorer (32'), der tilvejebringer andre kursaflæsninger θ_2, langs en agterdel af hvert streamersegment (28) nærmest en sidestyreindretning (22);

kendetegnet ved, at fremgangsmåden omfatter udformning af hvert streamersegment (28) som en lineær del (36) fra starten af hvert streamersegment (28) bagud til et mellempunkt (38) og en buet del (40) fra mellempunktet (38) bagud til enden af streamersegmentet (28);

beregning ud fra udformningen af en estimeret form af hvert streamersegment (28) som en funktion af den første og anden kursaflæsning (θ_1, θ_2) fra kurssensorerne (32, 32') i streamersegmentet (28).

11. Fremgangsmåde ifølge krav 10, hvorved fremgangsmåden omfatter installering af de andre kurssensorer (32') med sidestyreindretningerne (22).

12. Fremgangsmåde ifølge krav 10, hvorved fremgangsmåden omfatter installering af hver af de første kurssensorer (32) sammen med en streamerstyreindretning, der er fastgjort til hvert streamersegment (28).

13. Fremgangsmåde ifølge krav 10, hvorved tangensen til den lineære del (36) er angivet ved θ_1, og tangensen til den buede del (40) er angivet ved $\theta_1 + (\theta_2 - \theta_1) \cdot (d/s)^p$, hvor d er afstanden langs agterdelen, s er længden af agterdelen, og p er en empirisk fastlagt eksponent.

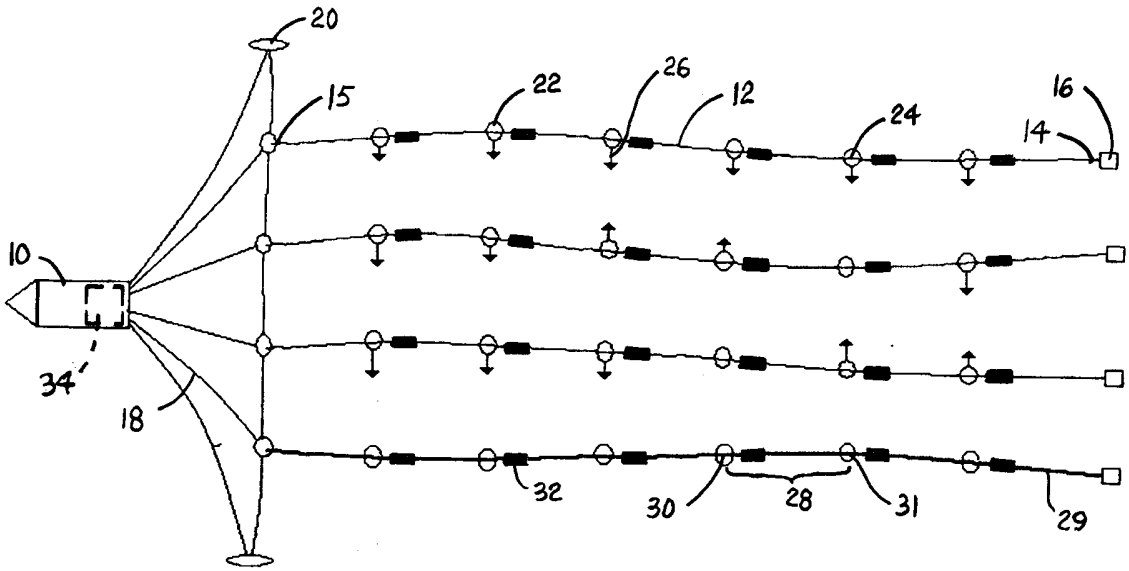
20
15
22
26
12
24
16
14
10
34
18
32
30
28
31
29

FIG. 1

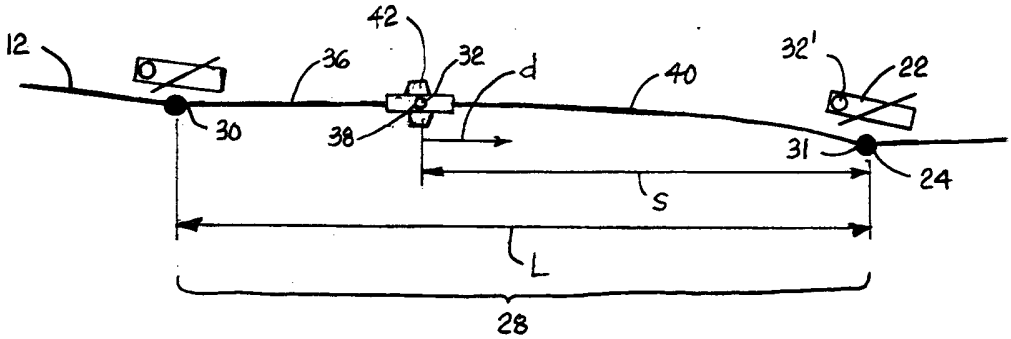
12
42
36
32
d
40
32'
22
30
38
31
24
S
L
28

FIG. 2