(12) UK Patent Application (19) GB (11) 2 363 291 (13) A

(43) Date of A Publication 12.12.2001

(21) Application No 0013891.7

(22) Date of Filing 07.06.2000

(71) Applicant(s)
UbiNetics Limited
(Incorporated in the United Kingdom)
Cambridge Technology Centre, MELBOURN, Hertfordshire, SG8 6DP, United Kingdom

(72) Inventor(s)
Alexander Howard Lloyd

(74) Agent and/or Address for Service
Withers & Rogers
Goldings House, 2 Hays Lane, LONDON, SE1 2HW, United Kingdom

(51) INT CL[7]
G08C 17/02 // H04M 11/00 , H04Q 7/32

(52) UK CL (Edition S)
H4L LDGX LRAX L209 L215

(56) Documents Cited
GB 2349300 A **GB 2341753 A** **GB 2303023 A**
US 5748101 A **US 5719564 A**

(58) Field of Search
UK CL (Edition R) **H4L LDA LDGX LDRRX LDRX LDST LDTU LED**
INT CL[7] **G08C 17/00 17/02 , H04B 7/14 7/15 7/155 , H04M 11/00 , H04Q 7/32 9/00 9/02 9/04 9/06 9/08 9/10 9/12 9/14 9/16**
ONLINE: WPI, PAJ, EPODOC, TXTUS1, TXTUS2, TXTWO1, TXTEP1, TXTGB1

(54) Abstract Title
Communications system

(57) A communications system comprises first and second units (11 and 1). The first unit 11 has a first transceiver 12 for telecommunication with a remote base station, and a second transceiver for communicating with the second unit over a short range Bluetooth (rtm) link. The second unit may contain a SIM card and may communicate with the base station, through the first unit using a standard that requires a sim card such as GSM. The first unit may be a handheld unit used to wirelessly read electricity meters supplied with secondary units. Alternatively, the first unit may be used as solar powered pay-phone unit. The secondary units may be used in a variety of applications including set-top TV boxes.

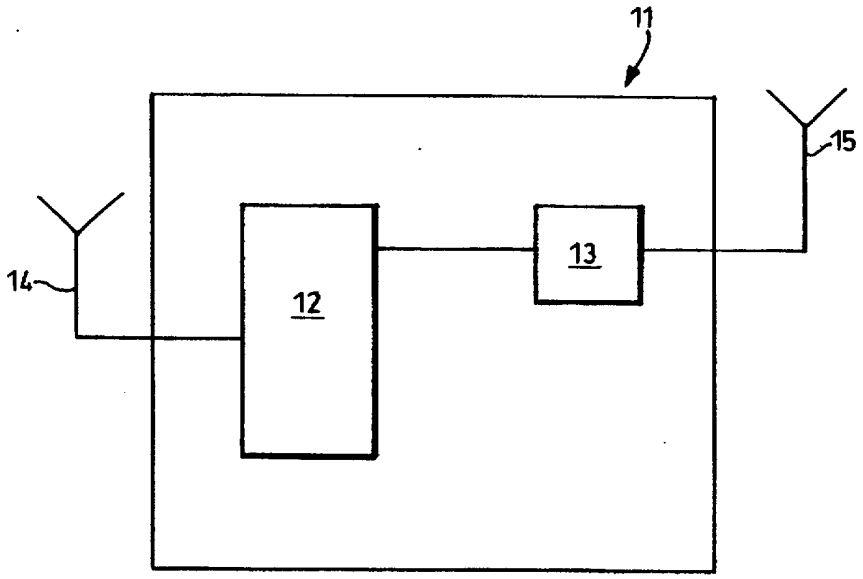

Fig.2.

GB 2 363 291 A

At least one drawing originally filed was informal and the print reproduced here is taken from a later filed formal copy.

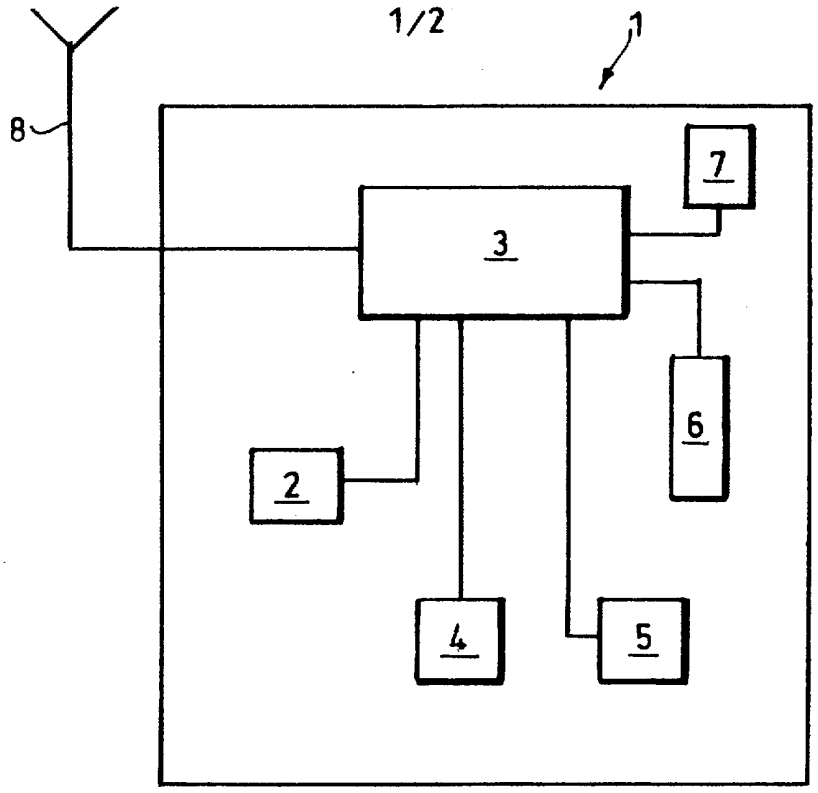

Fig.1.

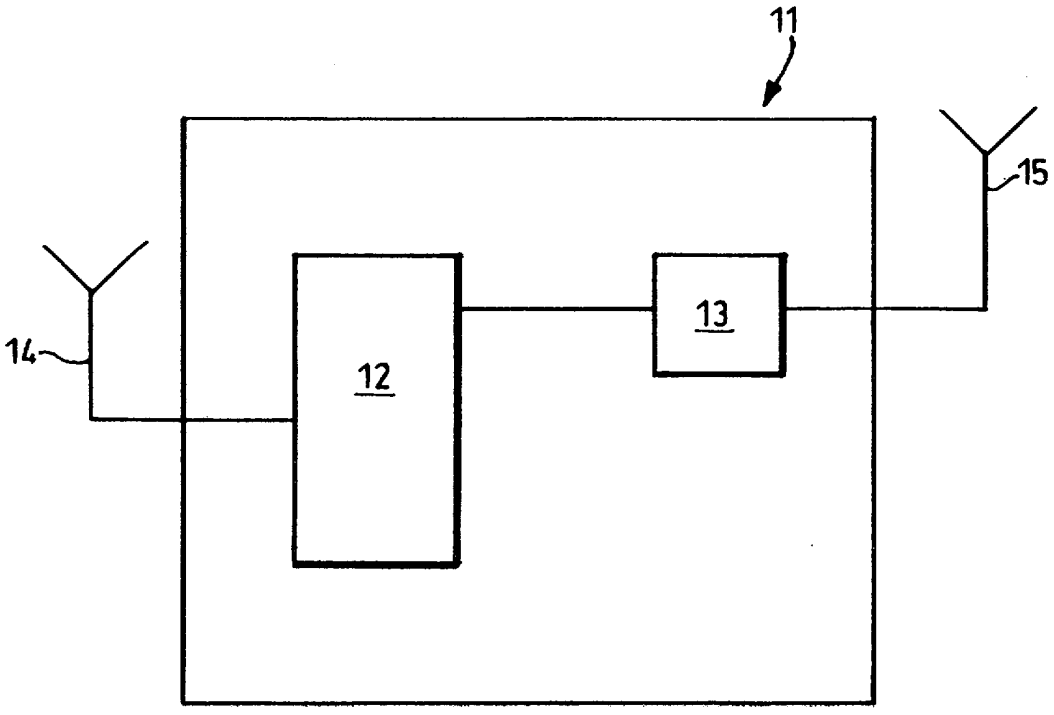

Fig.2.

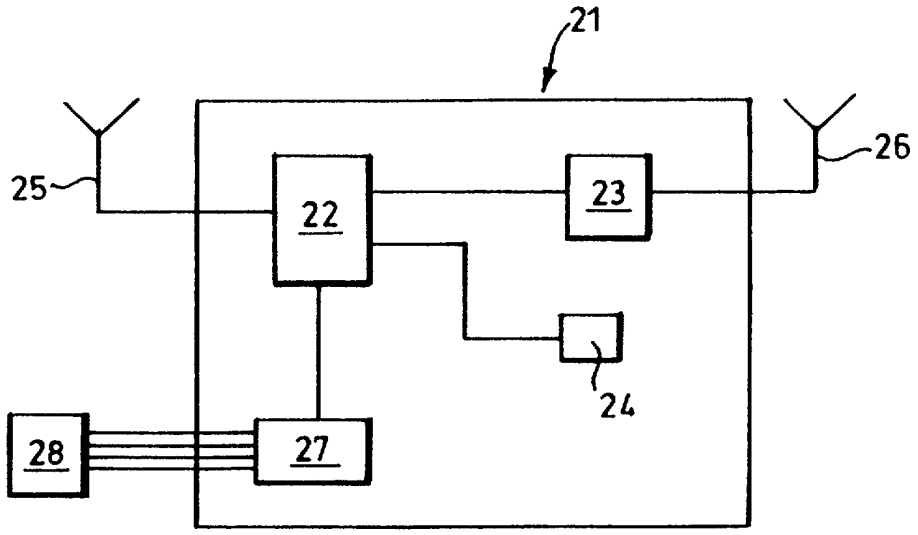

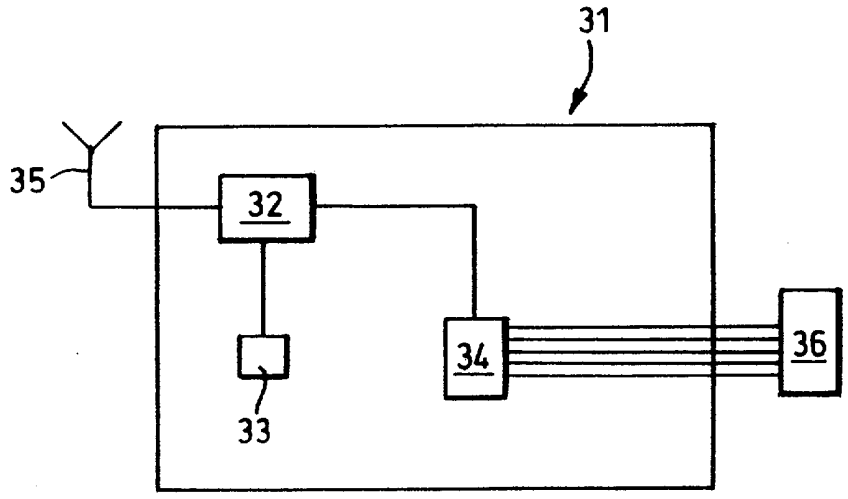

Fig.3.

Communications system

This invention relates to a communications system, and in particular to a mobile telecommunications system.

A commercial mobile telecommunications service typically utilises a cellular network structure in which users communicate using mobile station terminal equipment (mobile handsets) and base transceiver stations located in the cells. In a modern system such as the GSM system (global system for mobile communications) each mobile handset contains a subscriber identity module (SIM). The SIM is a smart card, and has a computer memory chip permanently installed thereupon. The SIM is a crucial element of the GSM system, in that it contains user specific information such as the identity of the user (the telephone number of the user), information to ensure that calls are billed to the user, information to enable the user identity to be verified by the network, information to provide security by voice encryption, and telephone numbers saved as short dial codes that are specific to the user. The SIM can also be used to contain other information defined by the network. In fact, the SIM is the only part of a mobile telephone which is truly personal to the user. Conventionally, a SIM card is installed semi-permanently within the handset of a mobile 'phone.

The present invention provides a telecommunications system comprising first and second separate entities, the first entity having a first transceiver for telecommunication with a remote base transceiver station, and a second transceiver for telecommunication with a third transceiver which is associated with the second entity.

In a preferred embodiment, the first transceiver communicates with the remote base transceiver station using a standard that requires the use of a SIM card, and the second entity contains a SIM card. In this way, the SIM card is separated from the main telecommunications device (the first entity) by a wireless link.

Advantageously, the first transceiver is a long range transceiver such as a GSM transceiver, and the second and third transceivers are short range transceivers such as Bluetooth transceivers.

Advantageously, the second entity further comprise a microphone and a loudspeaker. Alternatively, the second entity may further comprise a microphone and an earpiece. Conveniently, the second entity may also further comprise a keypad and a display.

In another preferred embodiment, the first entity is provided with a SIM card and control means, the control means being associated with a set of sensors arranged to read the meter of a first utility company. In this case, the second entity may include a SIM card and control means, the control means of the second entity being associated with a set of sensors arranged to read the meter of a second utility company. Advantageously, the system further comprises an additional second entity, the additional second entity including a SIM card and control means, the control means of the additional second entity being associated with a set of sensors arranged to read the meter of a third utility company.

The invention will now be described in greater detail, by way of example, with reference to the drawings in which:-

Figure 1 is a schematic representation of a communications device constructed in accordance with the invention;

Figure 2 is a schematic representation of a second form of communications device constructed in accordance with the invention; and

Figure 3 is a schematic representation of a communications system incorporating a number of communications devices constructed in accordance with the invention.

Referring to the drawings, Figure 1 schematically represents a communications device 1 known as a SIM entity. The SIM entity 1 incorporates a standard GSM SIM card 2 which is connected to a Bluetooth enabled slave unit 3. A microphone 4 and an earpiece 5 are also connected to the Bluetooth unit 3. The SIM entity 1 also incorporates a keypad 6 and a display 7, both of which are connected to the Bluetooth

unit 3. The Bluetooth unit 3 communicates with a GSM entity (to be described below with reference to Figure 2) via an aerial 8. The SIM entity 1 is powered by a battery (not shown) which may any suitable battery such as a lithium polymer battery or a lithium ion battery

Figure 2 is a schematic representation of a communications device 11 known as a GSM entity. The GSM entity 11 includes a GSM engine 12 and a Bluetooth enabled master unit 13 . The GSM entity 11 communicates with a base transceiver station (not shown) via an aerial 14, and the Bluetooth master unit 13 communicates with the SIM entity 1 via an aerial 15. The GSM entity 11 is powered either by mains electricity, or by a battery (not shown).

Bluetooth is a computing and telecommunications industry specification that describes how mobile 'phones, computers and personal digital assistants (PDAs) can easily interconnect with each other, and with home and business telephones using a short-range wireless connection. Each Bluetooth device is equipped with a microchip transceiver which transmits and receives in the previously-unused frequency band of 2.45 GHz that is available globally (with some variation of bandwidth in different countries). In addition to data, up to three voice channels are available. Each Bluetooth device has a unique 48-bit address from the IEEE 802 standard, and connections can be point-to-point or multipoint. The maximum range of Bluetooth is 10 metres, and data can be exchanged at a rate of 1 megabits per second (up to 2Mbps in the second generation of the technology). A frequency hop scheme allows devices to communicate even in areas where there is a great deal of electromagnetic interference. Built-in encryption and verification is provided in the Bluetooth specification.

Bluetooth provides a mechanism for creating short-range networks (piconets) which dynamically change as users enter and leave the range of the Bluetooth master. Each pieonet can support up to seven simultaneous devices (one master and six slaves), and each piconet can communicate with an adjacent piconet to form a scatternet to enable

wider coverage areas. Enhanced addressing allows more than seven units in each piconet, but not all can be active at any one time.

As mentioned above, Bluetooth provides the necessary bandwidth to enable multivoice channels in one piconet. In addition, dedicated (circuit-switched) channels or packet oriententered channels can be established.

In the arrangement described above, the Bluetooth master unit 13 is located in the GSM entity 11. In use, the GSM engine 12 searches for SIM entities within range on a continuous or occasional basis. When a Bluetooth slave unit 3 is located, the Bluetooth master unit 13 makes a check to determine the type of Bluetooth slave entity to see if it is a SIM entity. Once a valid SIM entity is located, it is registered with the GSM network in the same way as if a SIM card had been inserted in a conventional GSM mobile 'phone. Once registered with the network, the SIM entity 1 is free to make and/or receive GSM calls (voice, data, SMS, fax or packet data via the GPRS network).

From time to time (for example for registration or authentication purposes), the GSM network requires access to information on the SIM card 2. In such a case, the GSM engine 12 will communicate this request to the SIM entity 1 via the Bluetooth link, and pass on the information received from the SIM entity to the network. In some cases, it may be desirable to encrypt the information that passes over the Bluetooth link to maintain the security of the overall system.

Once a SIM entity 1 is in a call, the Bluetooth link is used to convey voice/data to, and from, the GSM engine 12.

It is possible for more than one SIM entity to register with the GSM engine 12 in such a way that the network can make calls to any of the registered SIM entities, or vice versa. However, since a conventional GSM engine can only support one voice call at a time, only one of the SIM entities will be able to communicate at a time, the network being blocked to other SIM entities during the call. In the event that a SIM entity moves out

of range of the GSM engine 12, the registration (and any existing call) of that SIM entity will be dropped, just as if a SIM card had been removed from a conventional GSM handset.

The Bluetooth master unit 13 can be optionally figured to accept all SIM entities within range, or just those of registered users. In the former case, the GSM entity 11 could be located in a public place such as the street or a railway station for access by any member of the public carrying a SIM entity. In the latter case, the GSM entity 11 could be located in a private location, such as a home or an office, so that access is possible only to SIM entities which have previously been registered with that GSM entity.

In cases where the full cost of a GSM transceiver cannot be borne by a single application, multiple low cost SIM entities can be clustered around a single GSM engine. This may be useful, in for example, meter reading where one GSM engine can serve the needs of a householder's water meter, electricity meter, gas meter etc, with all utility companies being billed for the calls they make. Thus, as shown in Figure 3, two utilities can make use of a single GSM engine. This figure shows a GSM entity 21 similar to that of Figure 3, the entity including a GSM engine 22 connected to a Bluetooth enabled master unit 23. The GSM entity 21 also includes a standard GSM SIM card 24 which is connected to the GSM engine 22. The GSM engine 22 communicates with a base transceiver station (not shown) via an aerial 25, and the Bluetooth master unit 23 communicates with a SIM entity (to be described below) via an aerial 26. The GSM entity 21 is also provided with a control box 27.

Assuming that the GSM entity 21 is set up to read a householder's meter of an electricity-supplying utility, sensors 28 associated with the electricity meter (not shown) are hard wired to the control box 27. In order to read the electricity meter, the electricity-supplying utility instructs the sensors 28 to read the meter and to transmit the readings back to the utility. In order to do this, the utility sets up a GSM call to the GSM entity 21 via the nearest base transceiver station and the aerial 25. The GSM engine 22 then transmits the instructions to the sensors 28 via the control box 27, and the meter readings are transmitted back to the utility via the control box, the GSM

engine, the aerial 25 and the base transceiver station. The electricity-supply utility is charged for this call, the call having been made via the SIM card 24 associated with that utility.

Figure 3 also shows a SIM entity 31 which it is assumed is set up to read the householder's meter of a gas-supplying utility. The SIM entity 31 includes a Bluetooth enabled slave unit 32, a SIM card 33 and a control box 34. The Bluetooth slave unit 32 communicates with the Bluetooth master unit 23 of the GSM entity 21 via an aerial 35 and the aerial 25. The SIM entity 31 also includes sensors 36 which are hard wired to the control box 34, the sensors being arranged to provide readings of the gas meter (not shown). In order to read the gas meter, the gas-supplying utility instructs the sensors 36 to read the meter, and to transmit the readings to the utility. In order to do this, the gas-supplying utility sets up a GSM call to the GSM entity via the nearest base transceiver station and the aerial 25. The GSM engine 22 then transmits instructions to the SIM entity 31 via the Bluetooth units 23 and 32 and the associated aerials 25 and 35. The gas-supplying utility is charged for this call, the call having been made via the SIM card 33 associated with that utility.

The metering arrangement of Figure 3 could, of course, be extended by providing a further SIM entity identical to the entity 31, this further SIM entity being associated with the householder's water meter. This further SIM entity will operate in the exactly the same way as the entity 31 to provide meter readings to the water-supplying utility, this utility being charged for metering calls.

The arrangement of Figure 3 could be further modified, for example, a modified form of the SIM entity 31 could be used in association with a TV satellite receiver set-top box to replace the standard hard wired connection for such a set-top box to a telephone socket of the householder's telephone system. In this case, the SIM entity would include an interface to the set-top box instead of the sensors of the entity 31.

It will be apparent that modifications could be made to the communications arrangements described above. In particular, wireless connection between a SIM entity

and a GSM entity can be carried out by any suitable means, such as any other short range radio system, or even a wireless system using optical signals or ultra sound signals. It would also be possible to incorporate a microphone and a loudspeaker (or an earpiece) in the GSM entity. In this case, the SIM entity could be made much smaller by not including a microphone and an earpiece. However, in order to use the system, the owner of such a SIM entity would have to be immediately adjacent to the GSM entity to make or receive a call.

In another modification, the system could be made substantially vandal proof by positioning the GSM entity in a secure area which is either not visible or not accessible to the user. It would also be possible to set up the system so that a user of a SIM entity could register with a particular GSM entity simply by pressing a button provided on the SIM entity to initiate the registration.

It will be apparent that the system described has many advantages. In particular, the SIM entity can be a cheap, low power device, and this device could be incorporated into other equipment such as a PDA. As the SIM entity is a low-power device, it could be powered by a small, cheap battery. This battery may be a re-chargeable battery, or a replaceable battery may be used.

Another advantage of this invention is that, in third world countries, it is often easier to roll out a cellular network than to install a wired payphone system. However, by rapid deployment of "payphone points" constituted by GSM entities of the type described above, use can be made of a cellular infrastructure. The GSM entities could be solar or battery powered without complex investment in infrastructure (beyond the cellular network infrastructure itself), and low cost equipment could then be given to a large section of the population to enable them to make calls from the "payphones". In an extension to this idea, the use of pre-paid SIM cards would obviate billing problems.

Yet another advantage is that, because all the billing information is contained in the SIM card of a SIM entity, public access to GSM entities can be provided, for example in hotels, conference centres, railway termini etc. In order to register with the network

of the operator providing the GSM entity, a user only needs to approach within range of the Bluetooth link to cause the GSM engine to register that user's SIM entity with the network. The user will then be able to make and receive voice/fax data calls, and these will be charged to the user. Accordingly, public access to GSM facilities is provided without users needing to carry a GSM mobile 'phone handset. Moreover, a plurality of users can register their SIM entities with a single GSM entity, whilst ensuring that all users are handled securely and are billed individually.

It will also be appreciated that, because the SIM entity can be a low cost, low powered device, it could be incorporated into a wrist watch like device or a headset for ease of use and portability.

It will also be apparent that the system of the invention can be used to transmit and receive data, for example in a general packet radio system (GPRS). In this case, multiple users may be registered with a single GSM entity, and all may connect, for example, to the same wireless internet provider. In this case, the GSM engine either has multiple instances of a TCP/IP protocol stack, or uses a different port from a single TCP/IP stack to multiplex/de-multiplex data from the different users to the IP provider. In this way, all the users can, for example, surf the web using a single GSM engine. The number of GPRS packets in either direction is managed by the network in such a way that the total bandwidth remains within the capacity of the GSM engine and the network. In this case, it will be appreciated that each of the users will be unaware of any other users of the same GSM entity.

Claims

1. A telecommunications system comprising first and second separate entities, the first entity having a first transceiver for telecommunication with a remote base transceiver station, and a second transceiver for telecommunication with a third transceiver which is associated with the second entity.

2. A system as claimed in claim 1, wherein the first transceiver communicates with the remote base transceiver station using a standard that requires the use of a SIM card, and the second entity contains a SIM card.

3. A system as claimed in claim 1 or claim 2, wherein the first transceiver is a long range transceiver, and the second and third transceivers are short range transceivers.

4. A system as claimed in claim 3, wherein the second and third transceivers are Bluetooth transceivers.

5. A system as claimed in any one of claims 1 to 4, wherein there is a plurality of second entities, all of which can simultaneously register with the first entity, whereby any one of the second entities can make and receive calls.

6. A system as claimed in any one of claims 1 to 5, wherein the first transceiver is a GSM transceiver.

7. A system as claimed in any one of claims 1 to 6, wherein the second entity further comprises a microphone and a loudspeaker.

8. A system as claimed in any one of claims 1 to 6, wherein the second entity further comprises a microphone and an earpiece.

9. A system as claimed in any one of claims 1 to 8, wherein the second entity further comprises a keypad.

10. A system as claimed in any one of claims 1 to 9, wherein the second entity further comprises a display.

11. A system as claimed in any one of claims 1 to 4, wherein the first entity is provided with a SIM card and control means, the control means being associated with a set of sensors arranged to read the meter of a first utility company.

12. A system as claimed in claim 11, wherein the second entity includes a SIM card and control means, the control means of the second entity being associated with a set of sensors arranged to read the meter of a second utility company.

13. A system as claimed in claim 12, further comprising an additional second entity, the additional second entity including a SIM card and control means, the control means of the additional second entity being associated with a set of sensors arranged to read the meter of a third utility company.

The Patent Office
INVESTOR IN PEOPLE

Application No: GB 0013891.7
Claims searched: 1-13

Examiner: Robert Macdonald
Date of search: 6 December 2000

Patents Act 1977
Search Report under Section 17

Databases searched:

UK Patent Office collections, including GB, EP, WO & US patent specifications, in:

UK Cl (Ed.R): H4L(LDA, LDGX, LDTU, LDRRX, LDRX, LDST, LED)

Int Cl (Ed.7): GO8C(17/00, 17/02), H04M(11/00); H04B(7/14, 7/15, 7/155); H04Q(7/32, 9/00, 9/02, 9/04, 9/06, 9/08, 9/10, 9/12, 9/14, 9/16)

Other: ONLINE: WPI, PAJ, EPODOC, TXTEP1, TXTWO1, TSTGB1, TXTUS1, TXTUS2

Documents considered to be relevant:

Category	Identity of document and relevant passage		Relevant to claims
X,E	GB 2349300 A	(RAMAR TECHNOLOGY) See pages 7-8	1
X	GB 2341753 A	(NOKIA MOBILE PHONES) See whole document	X(1,3,4,7, 8, and 9) Y(2,6,11)
Y	GB 2303023 A	(KNIGHTSBURY HOLDINGS) See para. 1, page 2; para. 2, page 6; and para. 3, page 12.	Y(2,6,7)
X	US 5748101	(QUALCOMM) See figure 1 and abstract.	1, at least.
X	US 5719564	(SEARS LA) See figures 1 and 4	1, at leat.

X Document indicating lack of novelty or inventive step
Y Document indicating lack of inventive step if combined with one or more other documents of same category.
& Member of the same patent family
A Document indicating technological background and/or state of the art.
P Document published on or after the declared priority date but before the filing date of this invention.
E Patent document published on or after, but with priority date earlier than, the filing date of this application.