E. N. HUMPHREY.

BELT BUCKLE.

APPLICATION FILED SEPT. 9, 1914.

1,139,036. Patented May 11, 1915.

Fig 1

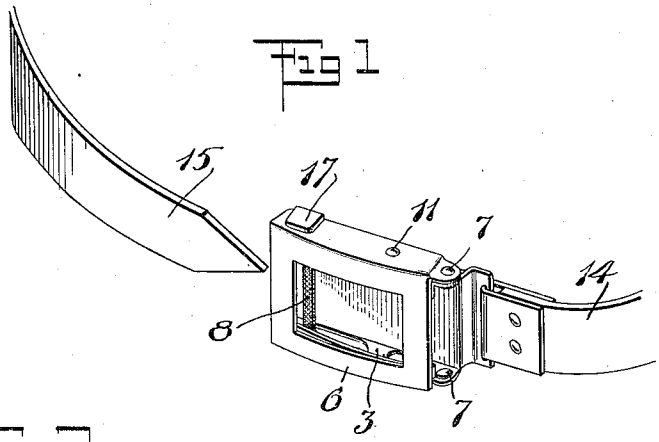

Fig 2

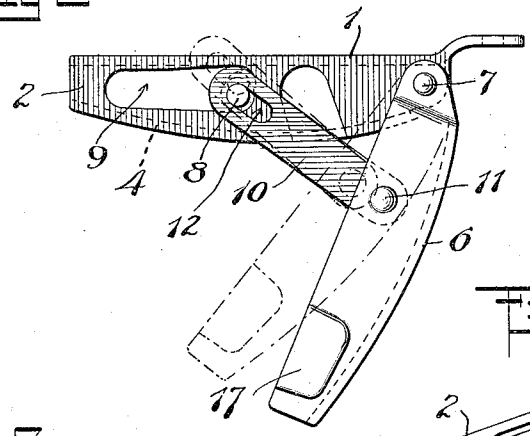

Fig 3

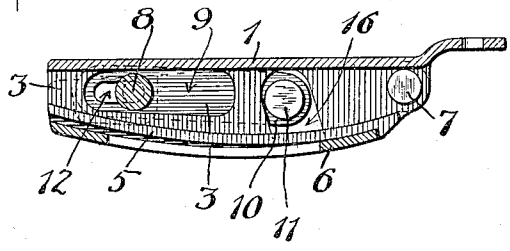

Fig 4

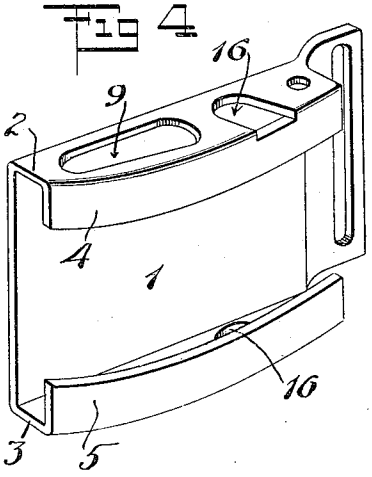

Witnesses:
Stanley B. Davis
Ida M. Hunziker

Inventor
Ernest N. Humphrey
By his Attorneys
Bartlett Brownell & Mitchell.

THE NORRIS PETERS CO., PHOTO-LITHO., WASHINGTON, D. C.

UNITED STATES PATENT OFFICE.

ERNEST N. HUMPHREY, OF NEW BRITAIN, CONNECTICUT, ASSIGNOR TO THE TRAUT & HINE MANUFACTURING COMPANY, OF NEW BRITAIN, CONNECTICUT, A CORPORATION OF CONNECTICUT.

BELT-BUCKLE.

1,139,036. Specification of Letters Patent. Patented May 11, 1915.

Application filed September 9, 1914. Serial No. 860,850.

To all whom it may concern:

Be it known that I, ERNEST N. HUMPHREY, a citizen of the United States, residing at New Britain, county of Hartford, State of Connecticut, have invented certain new and useful Improvements in Belt-Buckles, of which the following is a full, clear, and exact description.

My invention relates to an improved belt buckle, the object being to provide a simple and effective belt engaging means whereby a belt may be easily and quickly adjusted and held at any desired position.

In the drawings, Figure 1 is a perspective view of my improved buckle and parts of a belt. Fig. 2 is a relatively enlarged view of the upper edge thereof with the parts open. Fig. 3 is a longitudinal section with the parts closed. Fig. 4 is a perspective view of a detail.

1 is a base, the upper and lower sides of which are bent outwardly as at 2—3. The extreme edges of the sides 2 and 3 are inwardly turned as at 4—5 respectively. The inwardly turned edges 4—5 are preferably arched longitudinally as shown.

6 is a combined lever and face-plate hinged at 7—7 to the rear ends of the side walls 2—3 of the base 1. The sides of the lever 6 are turned down to form a box-like cover, said sides sliding over and covering the sides 2—3 of the base when the parts are closed.

8 is a belt wedging bar, or roller, movable to and fro in slots 9—9 in the side walls 2—3, the rear ends of said slots being preferably somewhat wider than the front ends, as shown. The belt wedging bar 8 is carried by toggle links 10—10, each of which links is pivotally connected at 11 to an intermediate part of the lever member 6. The bar 8 is suitably connected with the other end of each of said toggles 10—10. Preferably, the ends of the bar 8 stand in slots 12—12 in the links 10—10 so that said bar may have a limited sliding movement independently of the links 10—10. One end 14 of the belt is suitably secured to the rear end of the buckle, while the other end 15 of the belt is designed to slide through the buckle and to be adjustably held therein. When the belt end 15 is inserted, the parts of the buckle stand open as shown in Fig. 2, at which time the belt end may be slid into the forward end of the base member and between the wedging bar 8 and the overlying inturned portions 4—5. When the belt has been properly tightened the lever member 6 is pressed down into the position shown in Figs. 1 and 3. This movement of the lever 6 causes the wedging bar 8 to be forced ahead by the toggles 10—10 so that as said wedging bar, as it moves along in the slots 9, will move closer and closer to the overlying walls 4—5 of the base, thus gripping the belt end 15, the gripping position of the bar 8 being shown in Fig. 3. In the event of an unusual strain upon the belt, the bar 8 may move ahead to a limited extent as readily seen by an inspection of Fig. 3 so as to more tightly grip the belt. This independent sliding movement also makes the device adaptable to belts of varying thickness. The gripping bar 8 may, of course, turn or roll somewhat thereby avoiding undue chafing of the belt. If desired, the belt engaging part of the bar 8 may be roughened or knurled. When it is desired to release the belt, the lever 6 is swung out from the positions shown in Figs. 1 and 3 to approximately the position shown in Fig. 2, or to such an extent as to relieve the clamping action of the gripping bar against the underside of the belt. 16 are clearance recesses affording room for the heads of the rivets 11, while 17 are offsets affording clearance for the ends of the bar 8.

It will be understood that I have shown and described my improved buckle only in its preferred form, and that modifications may be made therein without departure from the spirit and scope of the invention.

What I claim is:

1. In a belt buckle, a base having a longitudinal passage therethrough for a belt, a lever pivoted at one end to said base, a clamping member slidably carried by the base and arranged to engage said belt and clamp the same against the lower wall of said base, a toggle connection between said lever and said clamping member whereby when said lever is moved toward the base, said member will be moved into belt clamping position.

2. In a belt buckle, a base having a longitudinal passage therethrough for a belt, a lever pivoted at one end to said base, a clamping member slidably carried by the base and arranged to engage said belt and clamp the same against the lower wall of said base, a toggle connection between said lever and said

clamping member whereby when said lever is moved toward the base, said member will be moved into belt clamping position, said belt clamping member comprising a bar extending across the base and arranged to engage a belt transversely.

3. In a belt buckle, a base having a longitudinal passage therethrough for a belt, a lever pivoted at one end to said base, a clamping member slidably carried by the base and arranged to engage said belt and clamp the same against the lower wall of said base, a toggle connection between said lever and said clamping member whereby when said lever is moved toward the base, said member will be moved into belt clamping position, said member having a limited independent movement relatively to said toggle connection.

4. In a belt buckle, a base member having a longitudinal passage therethrough for a belt, a belt clamping bar extending transversely across said base member in a position adjacent to the position to be occupied by a belt, said bar being guided by said base to be moved toward and from the lower wall thereof as the bar is shifted longitudinally in said base, means for shifting said bar comprising a lever pivotally connected to said base and a toggle connection between said lever and said bar, whereby as the lever is moved on its pivot the longitudinal position of the bar in said base will be shifted.

5. In a belt buckle, a base member having a longitudinal passage therethrough for a belt, a belt clamping bar extending transversely across said base member in a position adjacent to the position to be occupied by a belt, said bar being guided by said base to be moved toward and from the lower wall thereof as the bar is shifted longitudinally in said base, means for shifting said bar comprising a lever pivotally connected to said base and a toggle connection between said lever and said bar, whereby as the lever is moved on its pivot the longitudinal position of the bar in said base will be shifted, and means for permitting said bar to have a limited independent movement relatively to said toggle connection.

6. In a belt buckle, a base having a longitudinal belt passage therethrough, a clamping member extending transversely of the base and movable to and fro therein, with means for guiding said clamping member so as to move it toward and from the bottom of the base to effect belt clamping and releasing action, a lever arranged to overlie the belt and pivotally connected to said base, operative means of connection between said lever and said clamping member to move the latter into and out of belt engaging position, said clamping member gripping said belt between itself and the bottom of said base.

7. In a belt buckle, a base having a longitudinal belt passage therethrough, a belt clamping member carried by the base slidable relatively thereto to contract said belt passage for the purpose of gripping a belt, a lever pivotally mounted on said base and arranged outside of the belt passage and operatively connected with said slidable belt gripping member to move the same into the belt gripping position when closed down, and to move the same into the belt disengaging position when moved up.

8. In a belt buckle, a base having a longitudinal belt passage therethrough, a belt clamping member carried by the base slidable relatively thereto to contract said belt passage for the purpose of gripping a belt, a lever pivotally mounted on said base and arranged outside of the belt passage and operatively connected with said slidable belt gripping member to move the same into the belt gripping position when closed down, and to move the same into the belt disengaging position when moved up, said slidable member having a limited independent movement relatively to said lever.

9. In a belt buckle, a base having side walls and having a longitudinal belt passage therethrough, a belt clamping bar slidably mounted at its ends in the side walls of the base and extending across said belt passage, with means for imparting to the clamping bar an oblique movement relatively to one wall of the belt passage, a lever pivoted to the base outside of the belt passage, means of connection between the lever and said bar to impart movement to the latter as the lever is moved up and down.

10. In a belt buckle, a base having side walls and having a longitudinal belt passage therethrough, a belt clamping bar slidably mounted at its ends in the side walls of the base and extending across said belt passage, with means for imparting to the clamping bar an oblique movement relatively to one wall of the belt passage, a lever pivoted to the base outside of the belt passage, means of connection between the lever and said bar to impart movement to the latter as the lever is moved up and down, said bar having a limited independent movement relatively to the lever.

11. In a belt buckle, a base having a longitudinal belt passage therethrough and having upturned flanges at each side of said belt passage, said upturned flanges each having a slot, one wall of which is oblique relatively to the bottom of the belt passage, a belt clamping bar the ends of which stand in said slots, a combined lever and face plate hinged to the base and links connecting said lever with said bar whereby the movement of said lever will impart movement to said bar to move the latter into and out of belt gripping position.

12. In a belt buckle, a base having a longitudinal belt passage therethrough and having upturned flanges at each side of said belt passage, said upturned flanges each having a slot, one wall of which is oblique relatively to the bottom of the belt passage, a belt clamping bar the ends of which stand in said slots, a combined lever and face plate hinged to the base, and links connecting said lever with said bar whereby the movement of said lever will impart movement to said bar to move the latter into and out of belt gripping position, with means for affording limited independent movement of said bar relatively to said lever.

ERNEST N. HUMPHREY.

Witnesses:
FRANK L. TRAUT,
MARGARET A. GORMAN.

Copies of this patent may be obtained for five cents each, by addressing the "Commissioner of Patents. Washington, D. C."