F. F. SCOVILLE.

BALL JOINT.

APPLICATION FILED AUG. 13, 1917.

1,266,061.

Patented May 14, 1918.

3 SHEETS—SHEET 1.

-FIG. 1.-

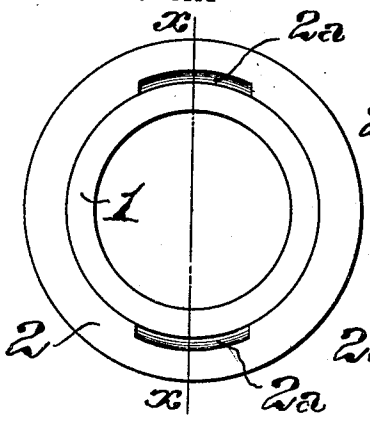

-FIG. 2.-

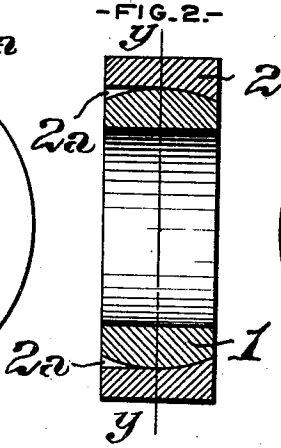

-FIG. 3.-

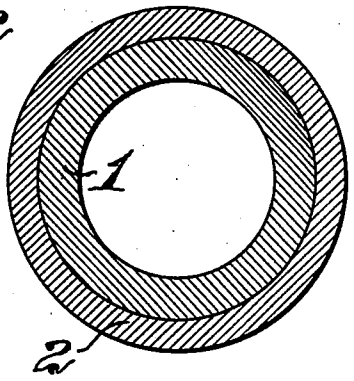

-FIG. 4.-

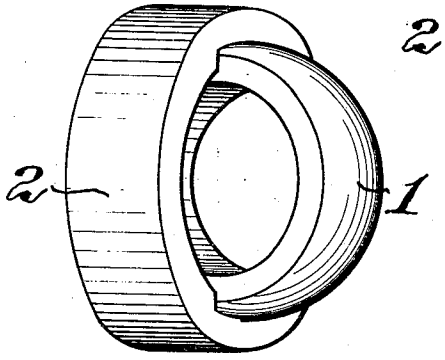

-FIG. 6.-

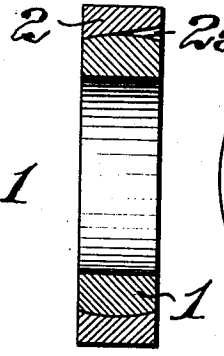

-FIG. 5.-

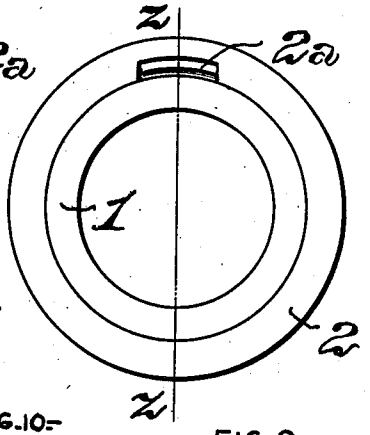

-FIG. 7.-

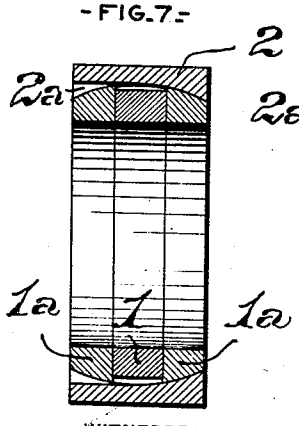

-FIG. 8.-

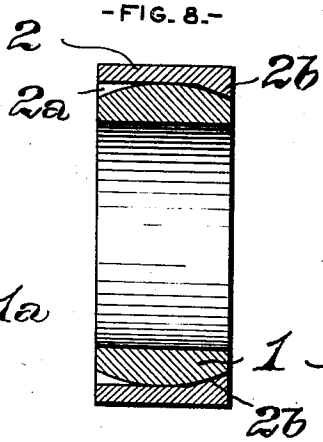

-FIG. 10.-

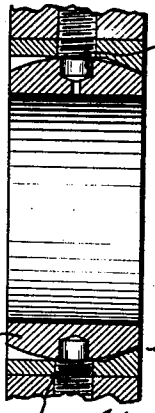

-FIG. 9.-

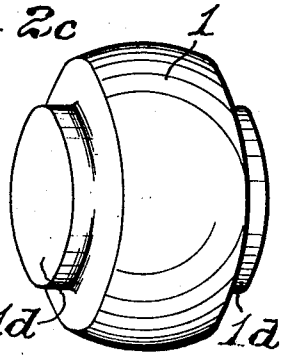

WITNESSES

Edward Wright

S. R. Bell

INVENTOR

Frank F. Scoville,

by J. Howden Bell,

atty.

F. F. SCOVILLE.

BALL JOINT.

APPLICATION FILED AUG. 13, 1917.

1,266,061.

Patented May 14, 1918.

3 SHEETS—SHEET 2.

-FIG. 11.-

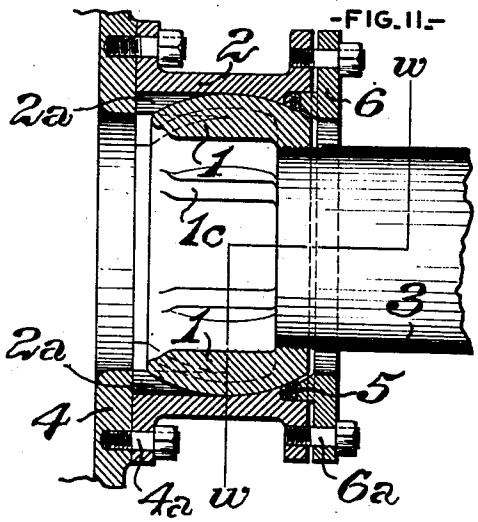

-FIG. 12.-

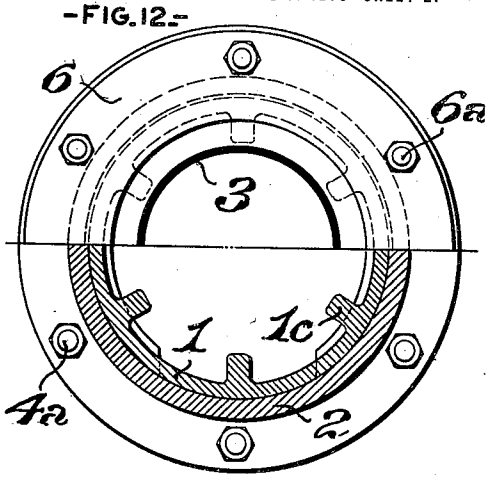

-FIG 13-

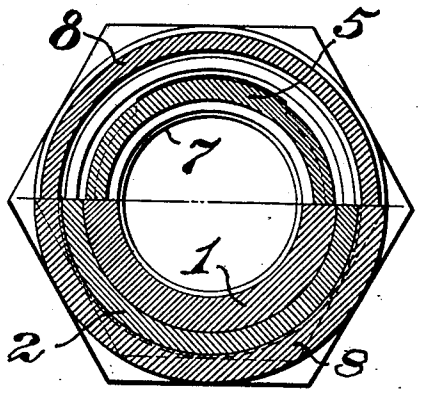

-FIG. 14.-

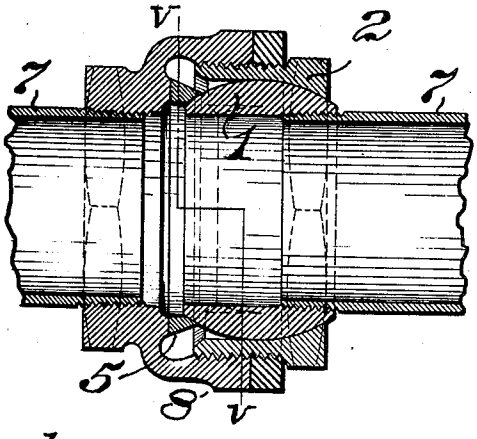

-FIG. 15.-

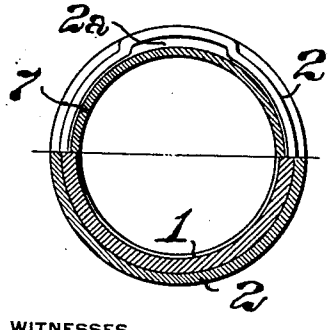

-FIG. 16.-

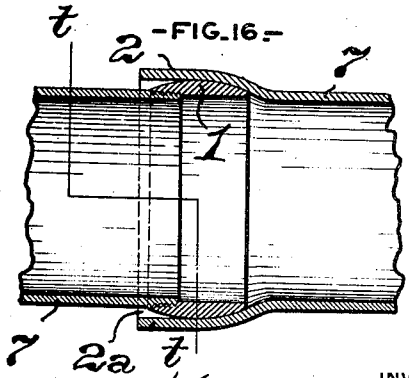

WITNESSES

Edward A. Wright.

H. R. Bell.

INVENTOR

Frank F. Scoville,

by Howson and Sell,

atty.

F. F. SCOVILLE.

BALL JOINT.

APPLICATION FILED AUG. 13, 1917.

1,266,061.

Patented May 14, 1918.

3 SHEETS—SHEET 3.

-FIG. 17.-

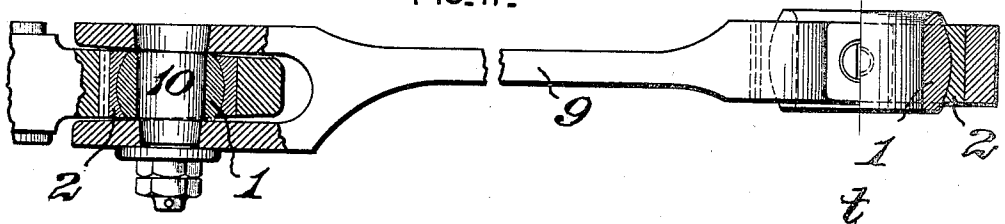

-FIG. 18.-

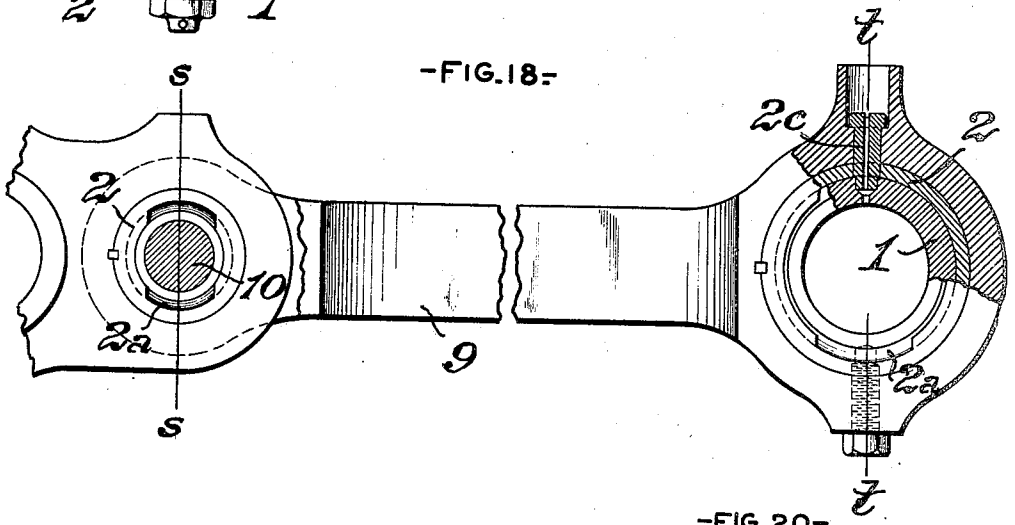

-FIG. 19.-

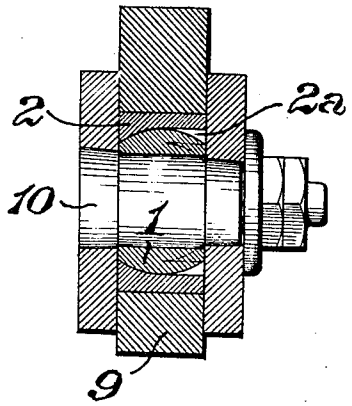

-FIG. 20.-

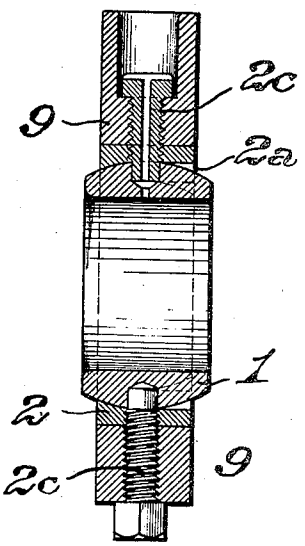

WITNESSES

Edward F. Wright.

S. R. Boles.

INVENTOR

Frank F. Scoville,

by Howson & Sell,

atty.

UNITED STATES PATENT OFFICE.

FRANK F. SCOVILLE, OF SCHENECTADY, NEW YORK.

BALL-JOINT.

1,266,061. Specification of Letters Patent. Patented May 14, 1918.

Application filed August 13, 1917. Serial No. 185,844.

To all whom it may concern:

Be it known that I, FRANK F. SCOVILLE, of Schenectady, in the county of Schenectady and State of New York, have invented a certain new and useful Improvement in Ball-Joints, of which improvement the following is a specification.

My invention relates to joint mechanism for connecting two relatively movable members, as, for example, two adjoining sections of a line of pipe, a connecting rod and a crank pin, etc., and its object is to provide an appliance of such type which shall be of simple and inexpensive construction, embody a minimum number of parts, and be adaptable to the ready attachment and detachment, as desired, of the members which it connects.

The improvement claimed is hereinafter fully set forth.

In the accompanying drawings: Figure 1 is a front view, in elevation, of a ball joint, illustrating an embodiment of my invention; Fig. 2, a longitudinal section, on the line *x*, *x*, of Fig. 1; Fig. 3, a transverse section, on the line *y*, *y*, of Fig. 2; Fig. 4, a view, in elevation, illustrating the manner of connecting the ball and socket members of the joint; Fig. 5, a front view, in elevation, illustrating a structural modification; Fig. 6, a longitudinal section, on the line *z*, *z*, of Fig. 5; Figs. 7, 8, and 10, longitudinal central sections, and, Fig. 9, a view in elevation, illustrating further structural modifications; Fig. 11, a longitudinal central section through a pipe joint, embodying my invention; Fig. 12, a transverse section through the same, on the line *w*, *w*, of Fig. 11; Fig. 13, a transverse section through a pipe joint, illustrating a structural modification, on the line *v*, *v*, of Fig. 14; Fig. 14, a longitudinal central section through the same; Fig. 15, a transverse section through a pipe joint, illustrating a structural modification, on the line *t*, *t*, of Fig. 16; Fig. 16, a longitudinal central section through the same; Fig. 17, a plan view, partly in section, illustrating the application of my invention in a locomotive engine coupling rod; Fig. 18, a side view, partly in section of the same, and, Figs. 19 and 20, vertical sections, on the lines *s*, *s*, and *r*, *r*, respectively of Fig. 18.

In the practice of my invention, referring descriptively to the specific embodiments thereof which are herein exemplified, and first to Figs. 1 to 4 inclusive, I provide a ball member, 1, which is turned peripherally to the form of a spherical zone, that is to say, of a sphere, truncated in planes on opposite sides of one of its central planes, the planes of truncation being preferably, as shown, parallel with, and at equal distances from, a plane passing through its center. The ball member is adapted to be attached to one of the parts which are to be connected by the ball joint, preferably, as shown, by being bored out to receive said part, to which it may be secured by screw threads, bolts or keys, or in any other suitable known manner, but may, if preferred be connected to it by axial trunnions, 1^a, as shown in Fig. 9.

The ball member is fitted, with the capacity of relative movement, in an integral socket member or seat, 2, which is bored out in correspondence with the spherical surface of the ball member, and is adapted to be secured to the other of the two parts which are to be connected. The socket member being, as above stated, integral, it will be apparent that means must be provided for the insertion and removal of the ball member, without involving liability to accidental or undesired displacement. To this end, two diametrically opposite longitudinal recesses, 2^a, are formed in the socket member, by slotting out its bore to a diameter which is just sufficient to admit the ball member, when turned at a right angle to its normal position, as shown in Fig. 4. The slots, 2^a, extend from one end of the socket member not less than to its middle plane, as shown in Fig. 2, and when the ball member has been moved so far into the socket member that its middle plane coincides with that of the socket member, it may be turned at a right angle, on a central axis in said planes, into its normal operative position, and its accidental displacement therefrom will be positively prevented by its bearing on the wall of the socket member, throughout the portion thereof which is not removed by the formation of the recesses, 2^a. One of the two parts which are to be connected by the ball joint, is attached to the ball member, after its insertion in the socket member, and must of course, be detached, in order to permit the removal of the ball member, when desired.

Various structural modifications may be made in the ball and socket members, with-

out departure from the spirit and operative principle of my invention. Thus, for example, when the ball member is comparatively thin longitudinally, it may be inserted in, and removed from, the socket member through a single recess, 2^a, as shown in Figs. 5 and 6. In order to enable the recesses to be reduced in width, the ball member may be made in two or more sections, as, for example, a middle section, 1, and two outer sections 1^a, 1^a, as illustrated in Fig. 7, the sections being separately and successively insertible in, and removable from, the socket member. As shown in Figs. 8 and 10, the ball member may be fitted in a socket member having two oppositely inclined seats, 2^b, instead of the single seat in the form of a spherical zone which is provided in the instances previously described. In order to prevent movement of the ball member in the socket member, in direction other than in the plane of the axis of its bore, as in certain applications, becomes desirable, it may be maintained in alinement with the central plane of the socket member which is at a right angle to said axis, by pins, 2^c, fixed, relatively to the socket member, and fitting in oppositely located sockets in the ball member, as shown in Fig. 10.

The application of my invention in connection with pipe joints of different forms, is illustrated in Figs. 11 to 16 inclusive. As shown in Figs. 11 and 12, a ball joint embodying a ball member, 1, and a socket member, 2, each of the construction first above described, is applied in connecting a receiver pipe, 3, to the exhaust passage of a high pressure cylinder, 4, of a compound locomotive. The ball member is screwed upon the end of the receiver pipe nearer the cylinder, and is provided with a plurality of internal ribs, 1^c, for the engagement of a wrench, in screwing it to, and detaching it from, the receiver pipe. The adjacent end of the socket member is secured detachably to the cylinder, by bolts, 4^a, and a packing ring, 5, which may be of the Dunbar or any other approved type, is fitted between the ball and socket members, and held in position by a follower 6, secured to the socket member by bolts, 6^a. It will be obvious that, if preferred, the separate follower may be dispensed with, the packing ring being held in the position shown in the socket member by an annular lip, constituting the mechanical equivalent of the follower.

Figs. 13 to 16 inclusive, illustrate the application of my invention in ball joints for the connection of two adjacent sections, 7, 7, of a pipe line. As shown in Figs. 13 and 14, the ball member, 1, is screwed upon one of the pipe sections, 7, and the socket member, 2, is screwed into a sleeve, 8, secured, by screw threads, on the other pipe section. A packing ring, 5, is fitted between the ball member and a face on the sleeve, 8, surrounding the opening therein into which the adjoining pipe section, 7, is screwed.

In Figs. 15 and 16, the ball member, 1, is screwed upon one of the pipe sections, 7, and fits in a socket member, 2, which is integral with the other pipe section, and is formed thereon by expanding it for a sufficient distance adjoining one of its ends. This joint is not provided with packing, and is more particularly adapted for application in pipe lines where the material carried is not under any substantial pressure, as in the case of those used for carrying concrete from a central point of supply and distributing it, by gravity, through pipes from a tower.

My invention is shown in Figs. 17 to 20 inclusive, as applied in joints between a locomotive coupling or side rod, 9, a knuckle pin, 10, and a crank pin. The socket members, 2, are fixed in the enlarged ends of the coupling rod, and movement of the coupling rod, in a vertical plane, on the crank pin, is prevented by pins, 2^c, screwed into the coupling rod, and engaging one of the ball members, 1, in the manner shown in Fig. 10 and before described.

I claim as my invention and desire to secure by Letters Patent:

1. The combination, in a ball joint, of a ball member having a spherical zone on its periphery; and an integral socket member, bored to receive the ball member, and having a longitudinal recess at one end of its bore, through which the ball member may be inserted in, and removed from, operative position in the socket member.

2. The combination, in a ball joint, of a ball member, divided, transversely of its axis, into a plurality of adjoining sections, and having a spherical zone on its periphery; and an integral socket member, bored to receive the ball member, and having a longitudinal recess at one end of its bore, through which the sections of the ball member may be successively inserted in, and removed from, operative position in the socket member.

3. The combination, in a ball joint, of a ball member having a spherical zone on its periphery; and an integral socket member, bored to receive the ball member, and having two diametrically opposite longitudinal recesses at one end of its bore, through which the ball member may be inserted in, and removed from, operative position in the socket member.

4. The combination, in a ball joint, of a ball member having a spherical zone on its periphery; an integral socket member, bored to receive the ball member, and having a longitudinal recess at one end of its bore, through which the ball member may be inserted in, and removed from, operative posi-

tion in the socket member; and means for preventing movement of the ball member in a plane at a right angle to its bore.

5. The combination, with two elements which are to be connected with the capacity of relative movement, of a ball joint comprising a ball member connected, detachably, to one of said elements, and having a spherical zone on its periphery; and an integral socket member connected to the other of said elements, said socket member being bored to receive the ball member, and having a longitudinal recess at one end of its bore, through which the ball member may be inserted in, and removed from, operative position in the socket.

6. The combination, with two tubular elements which are to be connected with the capacity of relative movement, of a ball joint comprising a ball member connected, detachably, to one of said elements, and having a spherical zone on its periphery; an integral socket member connected to the other of said elements, said socket member being bored to receive the ball member, and having a longitudinal recess at one end of its bore, through which the ball member may be inserted in, and removed from, operative position in the socket; and a packing ring interposed between the ball member and the exterior of the joint.

FRANK F. SCOVILLE.

Witnesses:
E. I. SCHAUBER,
J. HOWARD WAGAR.