Jan. 26, 1965 E. H. PATRICK 3,166,912

COMBINED REFRIGERATOR AND AIR CONDITIONER

Filed Jan. 17, 1964 4 Sheets-Sheet 1

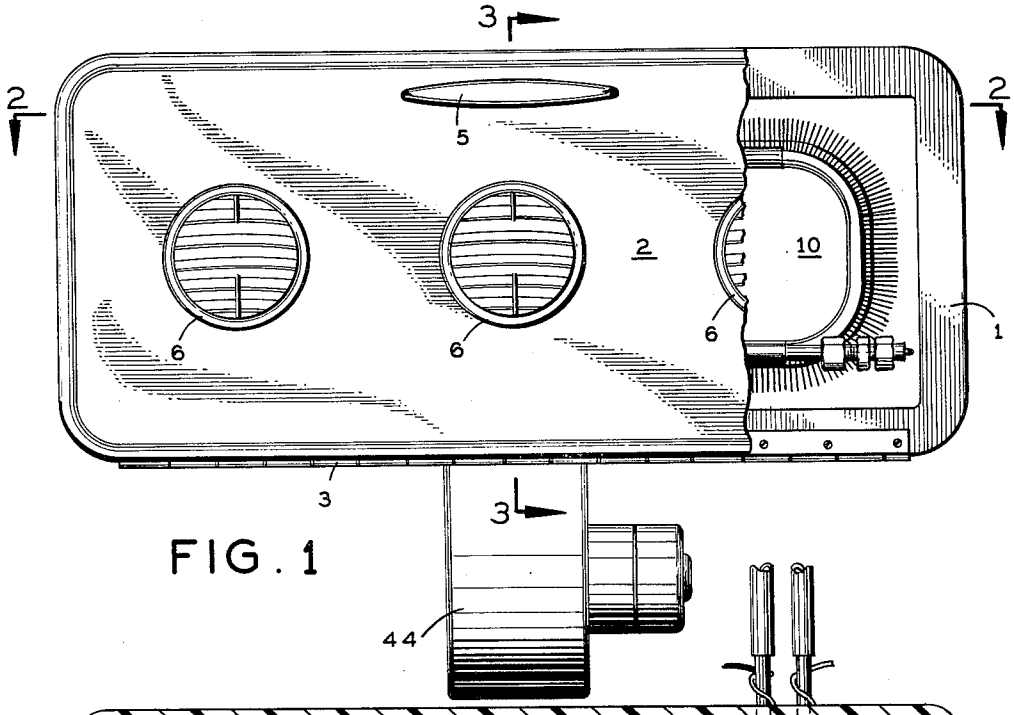


FIG. 1

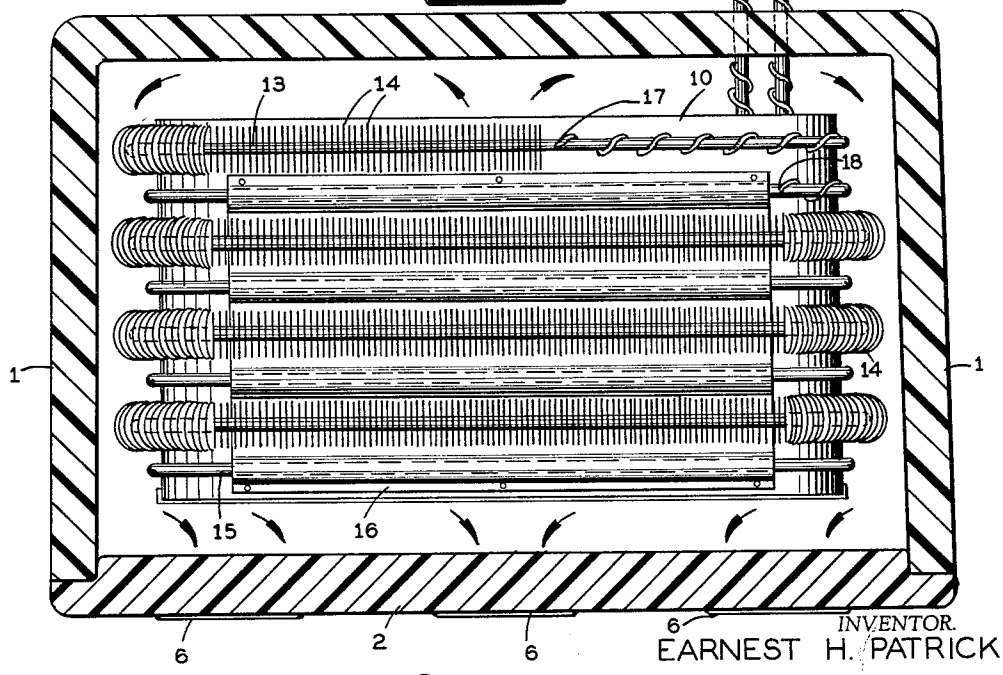


FIG. 2

INVENTOR.
EARNEST H. PATRICK
BY
James N. Glen
ATTORNEY

Jan. 26, 1965 E. H. PATRICK 3,166,912

COMBINED REFRIGERATOR AND AIR CONDITIONER

Filed Jan. 17, 1964 4 Sheets-Sheet 2

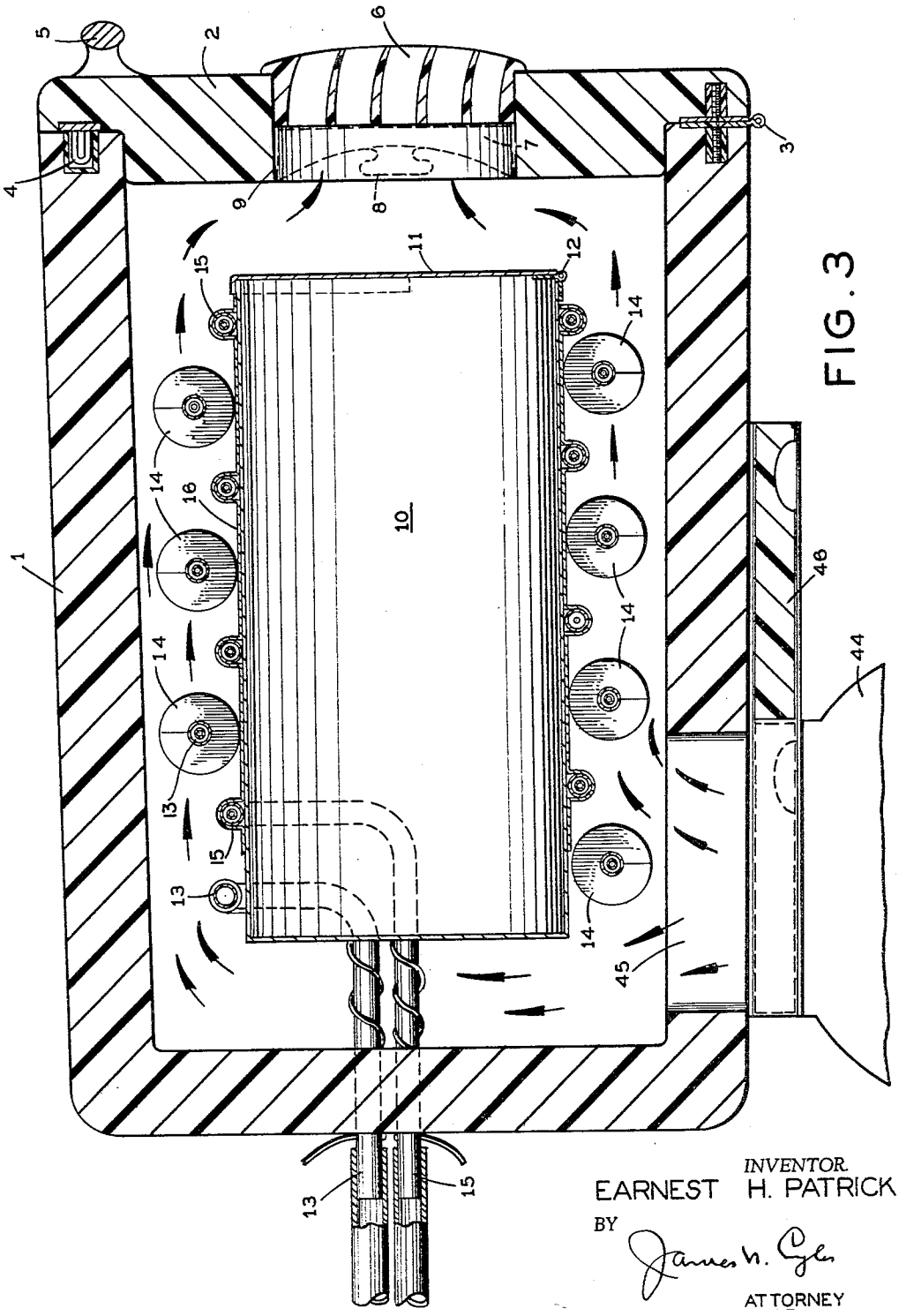


FIG. 3

INVENTOR
EARNEST H. PATRICK
BY James H. Cyles
ATTORNEY

Jan. 26, 1965 E. H. PATRICK 3,166,912

COMBINED REFRIGERATOR AND AIR CONDITIONER

Filed Jan. 17, 1964 4 Sheets-Sheet 3

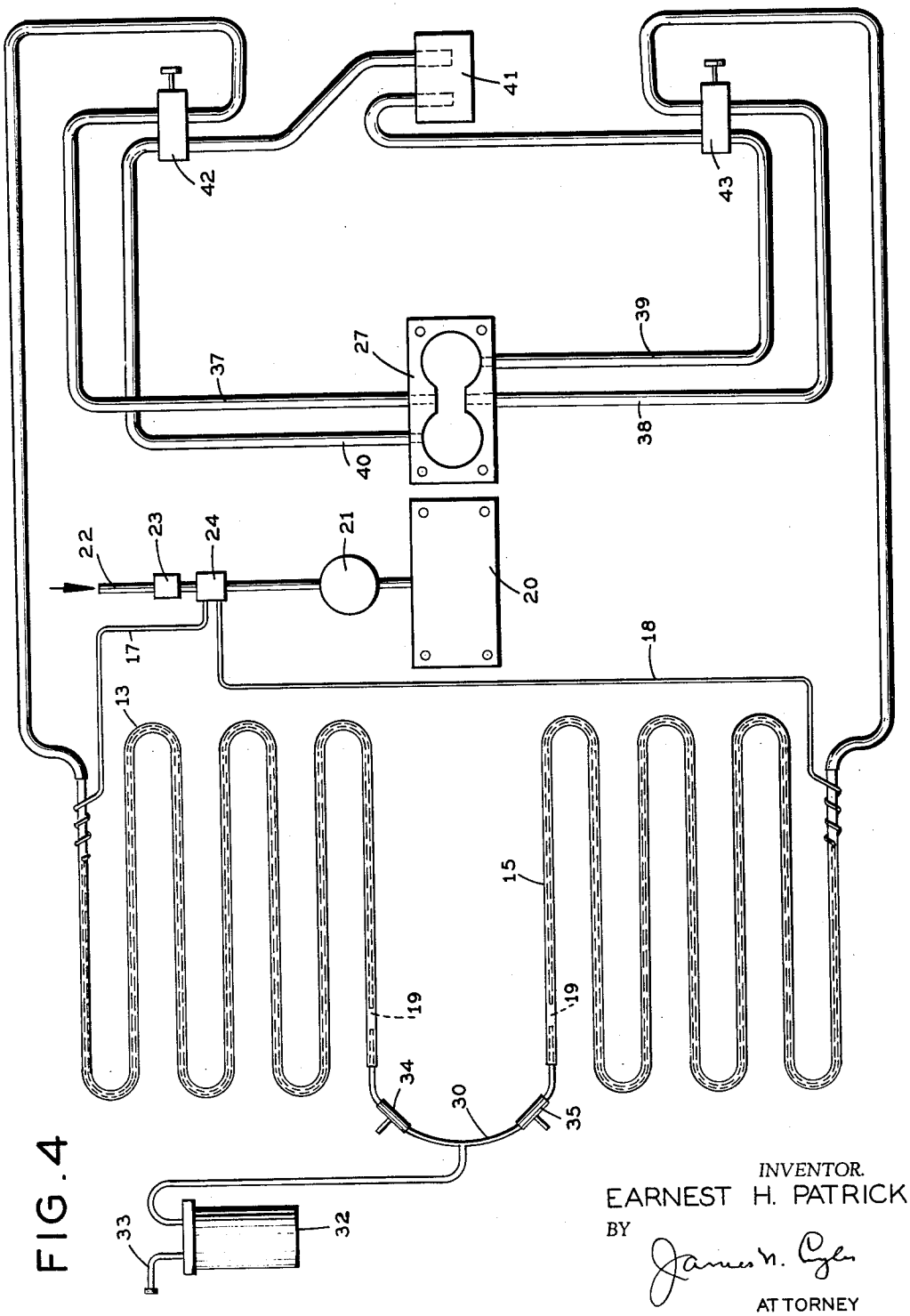


FIG. 4

INVENTOR.
EARNEST H. PATRICK
BY
James N. Cyles
ATTORNEY

Jan. 26, 1965 E. H. PATRICK 3,166,912

COMBINED REFRIGERATOR AND AIR CONDITIONER

Filed Jan. 17, 1964 4 Sheets-Sheet 4

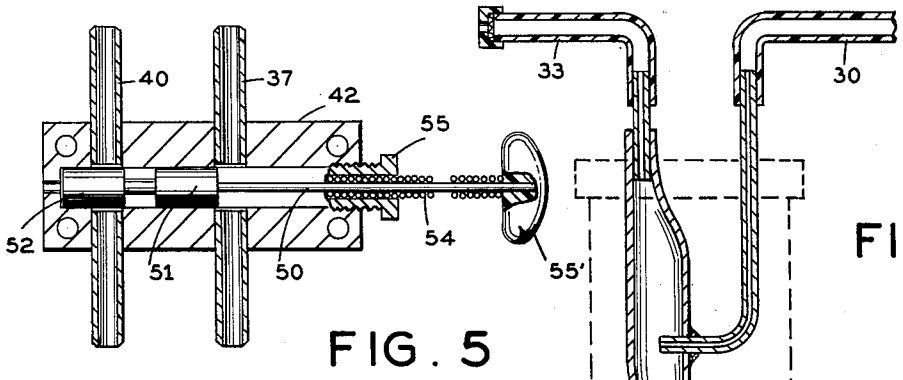


FIG. 5

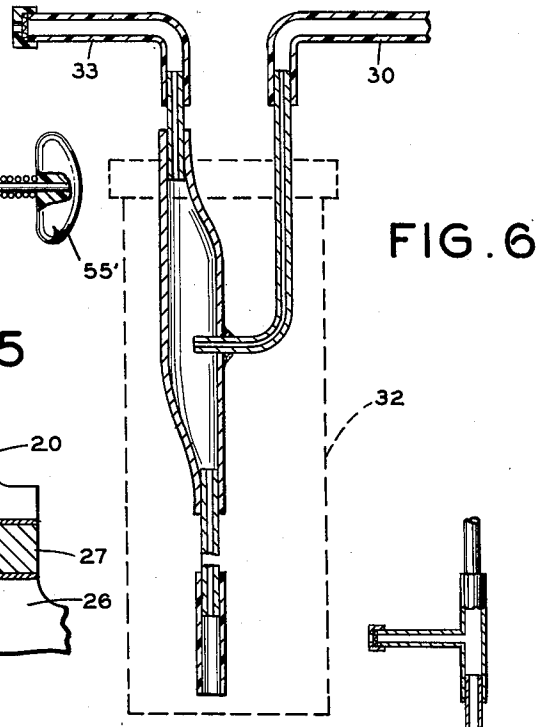


FIG. 6

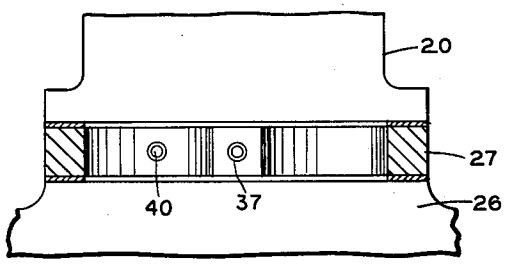


FIG. 7

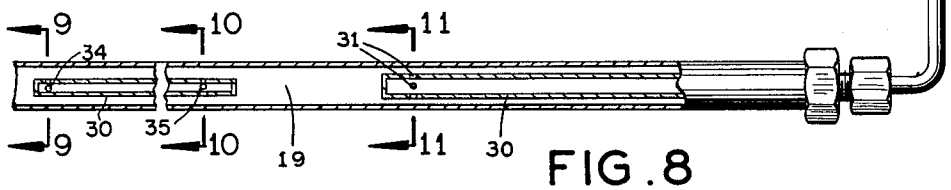


FIG. 8

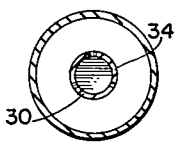


FIG. 9

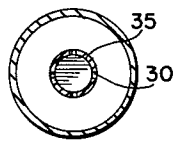


FIG. 10

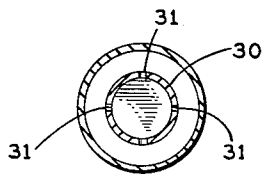


FIG. 11

INVENTOR.
EARNEST H. PATRICK
BY
ATTORNEY

United States Patent Office

3,166,912
Patented Jan. 26, 1965



3,166,912

# COMBINED REFRIGERATOR AND AIR CONDITIONER

Earnest H. Patrick, 831-B N. Federal Highway, Fort Lauderdale, Fla.

Filed Jan. 17, 1964, Ser. No. 338,423
6 Claims. (Cl. 62—7)

This invention relates to a combined air conditioner or space cooler and a refrigerator, and more particularly to a device of this character which can be successfully used in automobiles, boats or other vehicles.

It is an object of the invention to provide a device of this character which can be easily installed in a car or other vehicle without requiring extensive alterations or modifications thereto or presenting installation problems. It is an object of the invention to provide a device of this kind which has no moving parts, with the possible exception of the blower used for cool air distribution. It is an object of the invention to provide a device which is not only capable of use for cooling the interior of the vehicle, but which can be employed for the cooling or refrigeration of foods, milk, drugs, medicines and many other products.

It is an object of the invention to provide a device of this kind which will obviate the use of a compressor or other mechanically-operating device likely to impose a load on the engine of the vehicle; and to provide a device which will operate efficiently for the life of the car or eventually outlast the car, and which will permit of the easy removal from one car and its placement in another when desired.

More particularly the invention contemplates the provision of a cooling device which employs one or more cooling coils, with such coil or coils each provided within it with concentric, spaced passages, and means for suctionally causing the flow of raw gasoline through the innermost of said passages; of means for vaporizing the gasoline within the coil or coils and for causing a suctional flow of the vapor through the outer coil passages and in a direction opposite to the flow of the raw gasoline.

The invention contemplates other features to be set forth hereafter and more particularly pointed out in the claims appended hereto.

In the accompanying drawings, wherein an illustrative embodiment of the invention is disclosed,

FIG. 1 is a front elevational view, with a portion of the front panel or cover broken away, of the combined air conditioner and refrigerator constructed in accordance with the invention;

FIG. 2 is a sectional view, taken substantially on the line 2—2 of FIG. 1, looking in the direction of the arrows;

FIG. 3 is a sectional view, taken substantially on the line 3—3 of FIG. 1, looking in the direction of the arrows;

FIG. 4 is a diagrammatic view showing how the device is connected into the automotive apparatus;

FIG. 5 is a view of one of the air valves;

FIG. 6 is a fragmentary sectional view through an oil and air mixing device embodied in the invention.

FIG. 7 is a view of the inserted connection plate that is interposed between the carburetor and the intake manifold;

FIG. 8 is a partly sectional view of the air inlet means and the vaporizing arrangement;

FIGS. 9, 10 and 11 are sectional views taken respectively on the lines 9—9; 10—10 and 11—11 of FIG. 8, looking in the direction of the arrows.



Referring to the drawings, 1 indicates generally the body of the casing or housing for the combined air conditioner and refrigerator. The same consists of a rectangularly shaped container or enclosure with the walls thereof suitably insulated. The front panel 2 of the housing, constituting a cover member, is hinged at its lower end, as shown at 3, to the body of the casing and it is provided with a catch 4 at the top to hold it in its closed position as shown in FIG. 3. A handle 5 is provided on the cover 2 near the top of the same and the handle permits the convenient opening and closing of the cover.

Provided in the cover or front panel 2 are several rotatable louvers 6, three being shown, and the same are usable when the outflow of cool air is desired, or when the device is used as a space cooler in the car. The rotatable mounting of these louvers permits the cool air to be deflected in any desired direction. When the apparatus is being used only as a refrigerator, each of the louvers can be closed by an inserted disk or plug 7 placed in each louver opening 9 as shown in FIG. 3. A knob 8 is provided on the disk or plug 7 and such knob facilitates the insertion of the disk in the opening 9 or conveniently permits its ready removal therefrom.

Located within the housing 1 and spaced inwardly of the walls thereof, is a refrigerating chamber 10 provided at the front with a door 11 hinged to the body of the chamber 10 by hinges 12. When the device is used as a refrigerator, cans, bottles, food or other products to be kept under refrigeration are stored within the chamber 10 into which they can be readily placed by opening the hinged cover or panel 2 and then opening the door 11 to thus have access to the interior of the chamber 10. The goods to be cooled can also, if desired, be stacked in the housing or casing 1 around the outside of the chamber 10.

The chamber 10 is encircled by several cooling coils, one of which is shown at 13 and provided with cooling fins shown at 14. The second coil is shown at 15 and is affixed to the outer surface of the wall of the chamber 10 by a mounting plate 16. Each of the coils 13 and 15 is provided with an inside tube, such tube entering the coil 13 being shown at 17 and a similar tube entering the coil 15 being shown at 18. These inside tubes 17 and 18 are connected to a fitting 24 as shown in FIG. 4 and they convey raw gasoline to the two coils 13 and 14. The smaller inside tubes 17 and 18 are such that a spacing is formed between them and the outer tubes which form the bodies of the coils. Thus, each of the coils 13 and 15 actually has separate inner and outer passages, the innermost passage serving for the conveyance of the raw gasoline in one direction to points of vaporization, and the other passage serving for the movement in the opposite direction through the coils of the vaporized gasoline.

The conventional carburetor for the automobile engine is shown at 20 in FIG. 4. The fuel pump of the automobile is disclosed at 21 and the gasoline line leading from the gasoline tank of the car is shown at 22, the line being provided with the filter 23. A fitting is disclosed at 24 in the gasoline line, the fitting serving as a connection between the gasoline source and the tubes 17 and 18 which enters the coils 13 and 15 that encircle the chamber 10. It is significant to note that the fitting 24 must

be located between the fuel pump and the gasoline tank and not between the fuel pump and the engine.

The source of vacuum for suctionally drawing the raw gasoline through the tubes 17 and 18 of the two refrigeration coils, is taken from the intake manifold, a portion of which is indicated at 26 in FIG. 7. This is done by the employment of a special gas-to-air mixing adapter plate 27 which is placed under the carburetor and between the carburetor and the intake manifold. The vacuum from the engine draws the raw gasoline through the inside tubes 17 and 18 to a point of vaporization. This point of vaporization shown at 19 in FIGS. 4 and 8, is located approximately 4½ inches from the end of the small inside tube. Located within the coils 13 and 15 are the ends of an air and oil inlet tube 30 provided with jet openings 31. As shown in FIG. 4, the tube 30 leads from the oil and air supply sources shown respectively at 32 and 33. The air entering here because of the engine vacuum, helps to start the vaporization of the raw gasoline which, in a vaporized condition, is now drawn back in a direction opposite to the raw gasoline flow through the coils in the space between the inner tube 17 or 18 and the two outer tubes which constitute the coils 13 and 15. Air vents are shown at 34 and 35 in the tube 30. This arrangement is such that the raw gasoline flows through the fitting 24 and through the inner tubes 17 and 18 to the vaporization points 19 where the air mixes with the gasoline to produce vapor and the vapor thus produced flows backwardly through the coils 13 and 15 around the outside of the inner tubes 17 and 18.

The tubing constituting the body of the coils 13 and 15 draws, by means of the vacuum created by engine operation, the vaporized freezing agent or refrigerant, through the entire length of the refrigeration coils. The tubing which thus forms the body of the coils, then taking the form of neoprene hose, is extended as indicated at 37 and 38 to connect to the plate 27 situated between the carburetor and inlet manifold as shown in FIG. 7.

After the vapor has performed as a refrigerant, the vapor continues on through the neoprene vacuum hoses 37, 38 to the plate 27 as above mentioned. Since the vaporized gas enters through this plate, which is situated beneath the carburetor, additional air must be provided to mix with the vaporized gas in order to secure the proper combustion. This is accomplished by means of the plate 27 into which an air supply is directed through tubes 39 and 40 which lead from the carburetor intake air filter shown at 41. Air-regulating valves are provided as shown at 42 and 43. One of these valves is shown in FIG. 5 and it includes a stem 50 bearing the heads or plugs 51 and 52. The stem is surrounded by a spring 54 passing through the adjusting bushing 55 and the stem terminates in the knob 55'.

Provided on the bottom of the housing or casing 1 is a blower 44 having its outlet in communication with the interior of the housing by means of an opening 45 in the bottom wall of the housing 1. When the blower is in operation and its outlet is in communication with the interior of the housing, the blower will direct a blast of air around the cooling coils to thereby cool the air which then flows out through the louvers to thereby cool the interior of the automobile. When the apparatus is used solely as a refrigerator, that is to say for the refrigeration of food or other goods contained in the chamber 10 or in the housing around the chamber, the outlet of the blower can be closed off by the use of the sliding valve or door shown at 46. Controls may be provided for the blower and by means of which the blower can be operated at various speeds to secure the desired flow of the cool air through the car or other vehicle in which the device is installed.

From the foregoing, the operation of the improved air conditioner and refrigerator will be understood. The raw gasoline drawn through an inside passage within one



or more cooling coils is caused to be mixed with air, or is vaporized after the gasoline has traversed the length of the coils. At the point of vaporization located at the end of flow of the raw gasoline, the gasoline is converted to vapor and by the imposition of suction attained by engine operation, the vapor is caused to traverse the length of the coils in the space between the inside passages or tubes 17 and 18 and the inner walls of the coils, the vapor being moved in a direction reversely to the direction of flow of the raw gasoline. The gasoline vapor serves as a refrigerant and very low temperatures are attained within the housing 1 and chamber 10, such temperatures being obtained within a very short period of operation of the device.

By directing an air flow around the coils through which the vapor flows and causing such air to be directed out of the housing through the louvers, a flow of cool air is obtained within the interior of the car or in any other space required to be cooled by the device. Goods to be cooled or refrigerated can be contained within the chamber and can also, if desired, be placed in the housing forwardly of the housing or around the coils.

Having thus described a single embodiment of the invention, it is obvious that the same is not to be restricted thereto, but is broad enough to cover all structures coming within the scope of the annexed claims.

What I claim is:

1. A combined air conditioner and refrigerator comprising, a pair of cooling coils, a chamber encircled by the coils, one of said coils having convolutions contacting the surface of the chamber and the second coil being finned and spaced from the chamber, each coil having an outer tube and an inner tube within it, the inner tube being spaced from the outer tube whereby a vapor passage is formed between the tubes, a source of gasoline connected to the inner tube to cause a flow of the gasoline therethrough in one direction, means for vaporizing the gasoline at points within the coils, and means for causing a flow of the vapor thus produced through the vapor passage in the coils, the latter flow being suctionally caused by vacuum created by engine operation, the convolutions of one of the coils being located between the convolutions of the second coil.

2. In a combined air conditioner and refrigerator for automobiles, an insulated housing, a chamber arranged within the same and spaced from the wals thereof, a finned cooling coil encircling the chamber, means for causing a flow of gasoline through the coil in one direction, means for vaporizing the gasoline and forcing the vapor through the coil in the opposite direction, the coil being divided into separate passages, with the raw gasoline flowing through one of the pasages and the vapor flowing through the other passage in the opposite direction, and a second coil located around the outside of the chamber and having convolutions located between and spaced from those of the finned coil.

3. In a combined air conditioner and refrigerator as provided for in claim 2, wherein a blower is provided externally of the housing for directing an air flow into the housing and around the coils, and louvers are provided in a wall of the housing through which the cooled air can pass out of the housing.

4. In a combined air conditioner and refrigerator as provided for in claim 3, wherein a plug is provided behind each louver, said plugs being used to confine the cold air within the housing and being removable to permit the flow of cold air out of the housing.

5. In a combined air conditioner and refrigerator as provided for in claim 2, wherein a valve is provided between the blower and the housing to regulate the flow of air from the blower to the interior of the housing.

6. A combined air conditioner and refrigerator comprising, a cooling chamber, an insulated enclosure arranged around the cooling chamber and spaced there-

from, a pair of cooling coils arranged in the space between the insulated enclosure and the cooling chamber, one of the coils having convolutions spaced away from the cooling chamber and having fins, the second coil having convolutions located betwen those of the first coil and spaced therefrom, and means for attaching the convolutions of the latter coil to the surface of the cooling chamber.

**References Cited by the Examiner**

UNITED STATES PATENTS

| | | | |
|---|---|---|---|
| 2,259,950 | 10/41 | Downs | 62—7 |
| 2,438,594 | 3/48 | Zapart | 62—7 |
| 2,565,767 | 8/51 | Gaskell | 62—7 |
| 2,872,790 | 2/59 | Simpson | 62—7 |
| 3,027,727 | 4/62 | Farmer | 62—7 |



ROBERT A. O'LEARY, *Primary Examiner.*

WILLIAM J. WYE, *Examiner.*