(No Model.)

5 Sheets—Sheet 1.

F. M. COMSTOCK.

ENGINE.

No. 590,656. Patented Sept. 28, 1897.

Fig. 1.

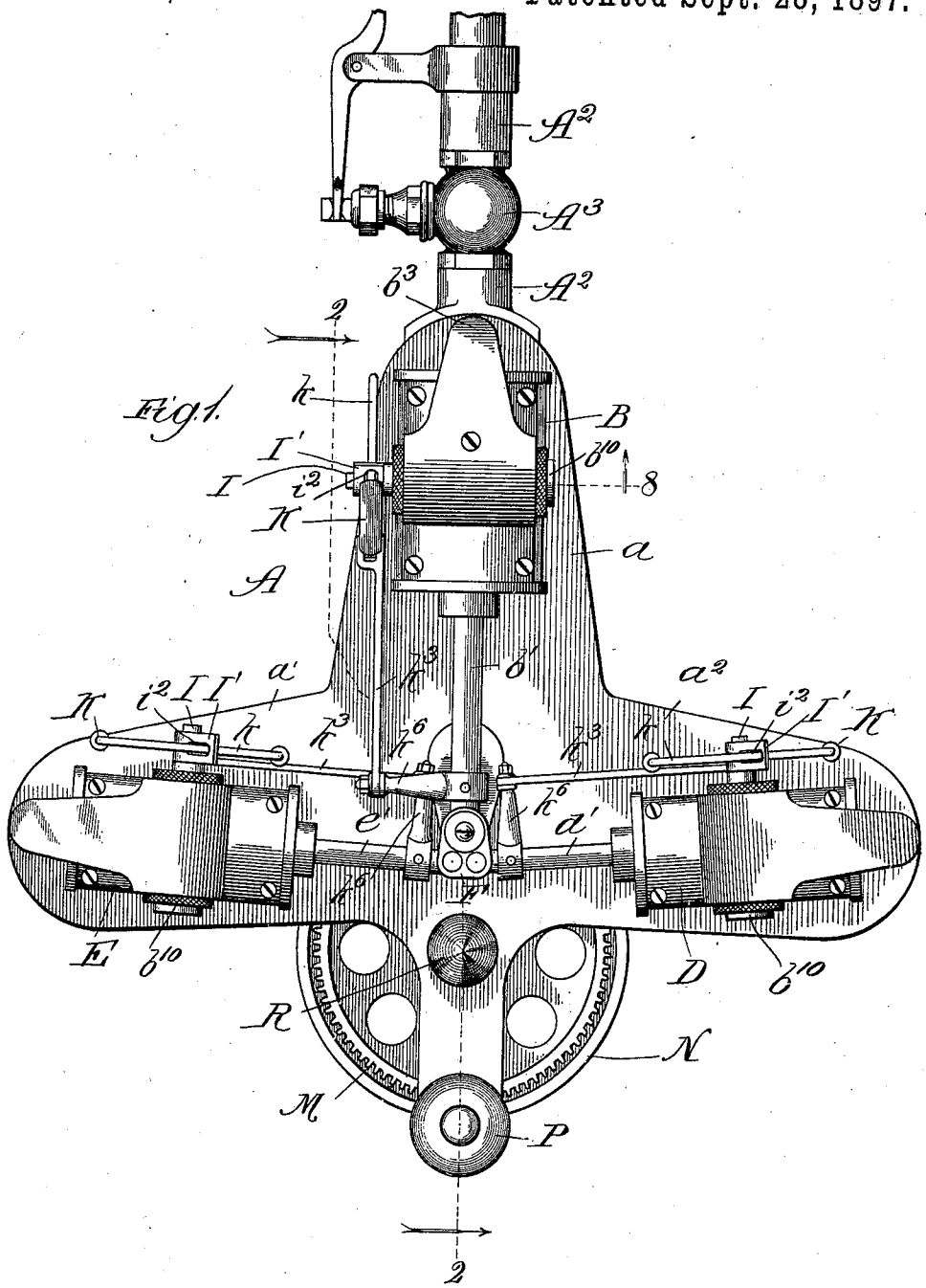

Witnesses:
Chas. E. Gaylord,
Lutz L. Adler.

Inventor:
Francis M. Comstock,
By Benning & Benning & Sheridan,
Attys.

THE NORRIS PETERS CO., PHOTO-LITHO., WASHINGTON, D. C.

(No Model.)

5 Sheets—Sheet 2.

F. M. COMSTOCK.

ENGINE.

No. 590,656. Patented Sept. 28, 1897.

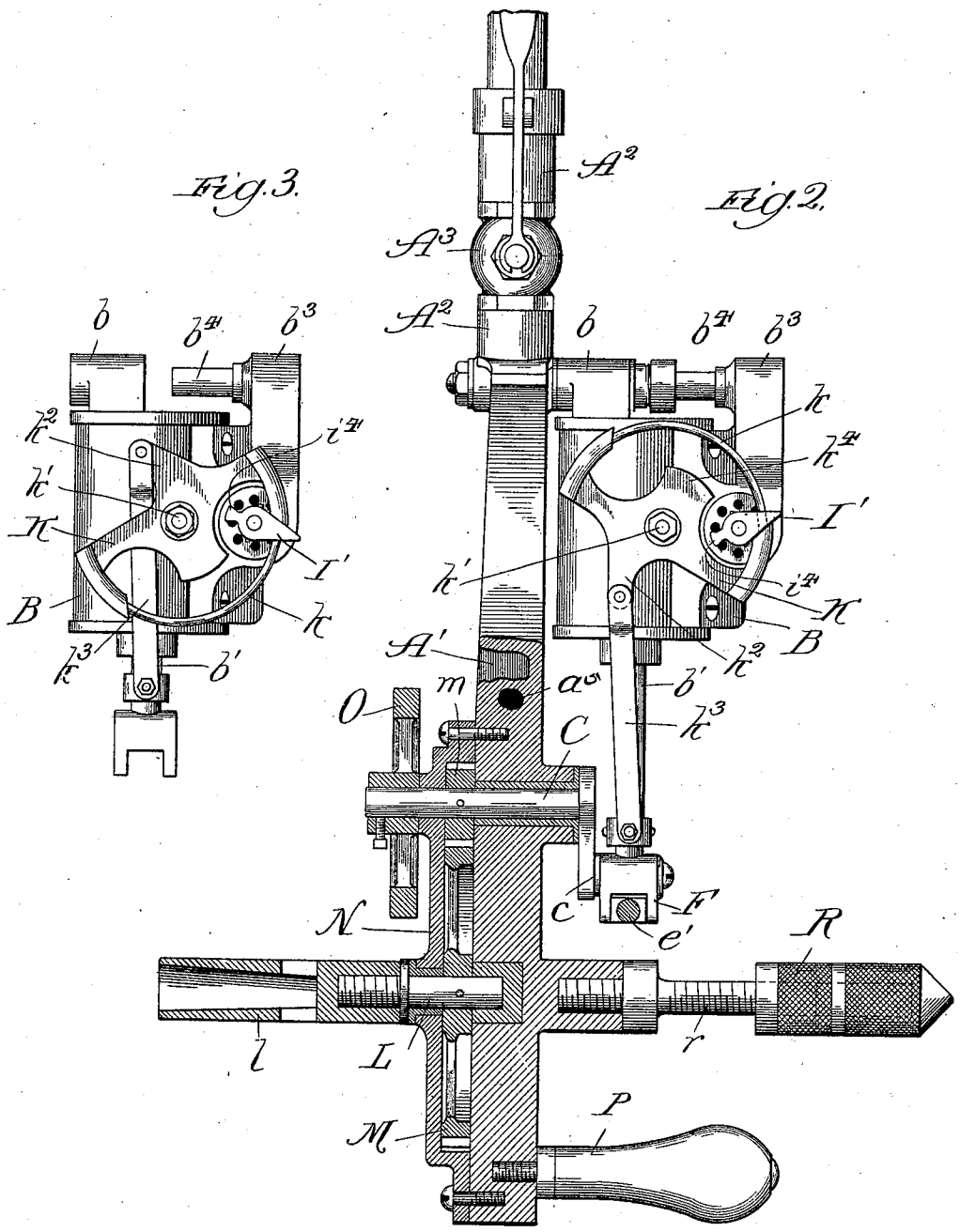

Witnesses:
Chas. E. Gaylord,
Lutt. J. Alter.

Inventor:
Francis M. Comstock,
By Banning & Banning & Sheridan,
Att'ys.

THE NORRIS PETERS CO., PHOTO-LITHO., WASHINGTON, D. C.

(No Model.) 5 Sheets—Sheet 3.

F. M. COMSTOCK.

ENGINE.

No. 590,656. Patented Sept. 28, 1897.

Fig. 4.

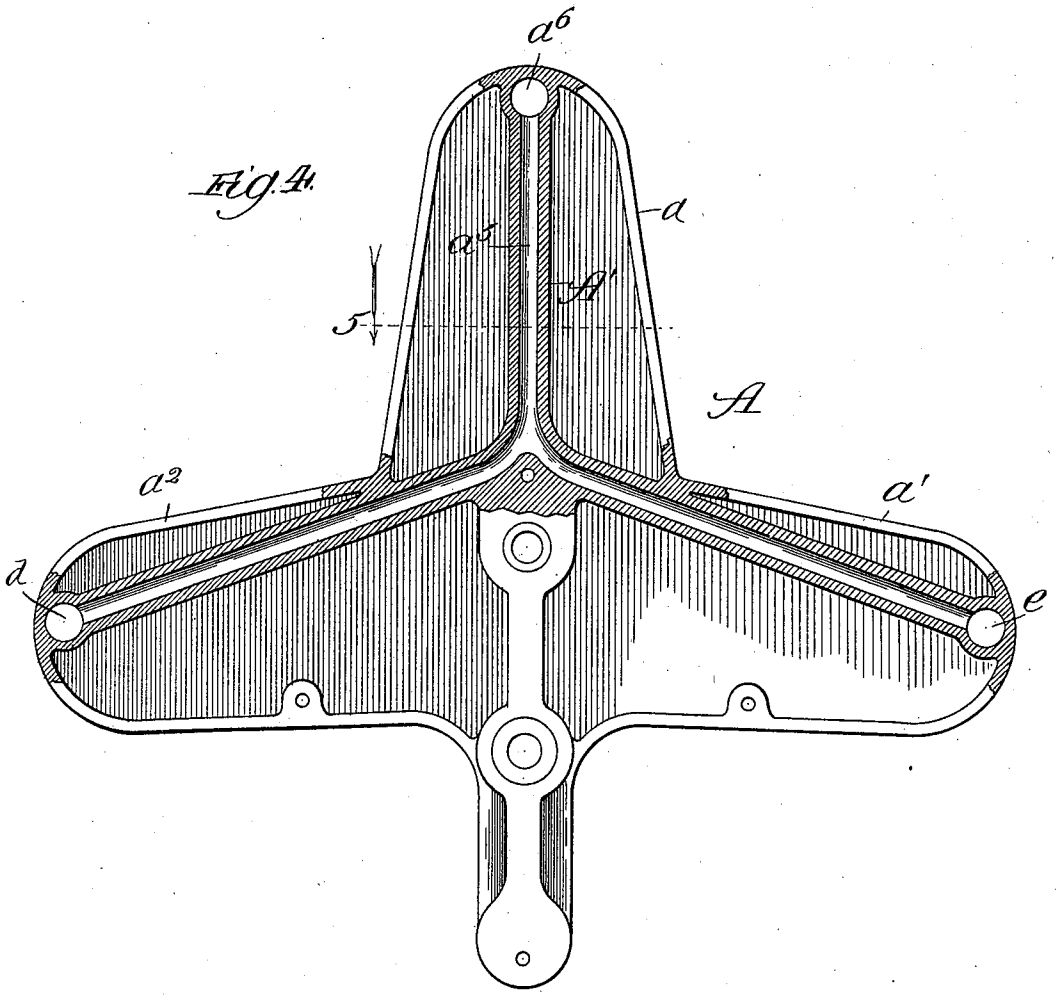

Fig. 5.

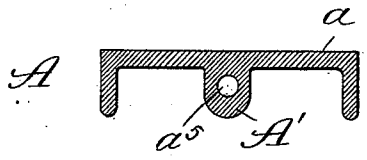

Witnesses:
Chas. E. Gaylord.
Lester L. Potter.

Inventor:
Francis M. Comstock.
By Banning & Banning & Sheridan,
Attys.

THE NORRIS PETERS CO., PHOTO-LITH., WASHINGTON, D. C.

(No Model.) 5 Sheets—Sheet 4.

F. M. COMSTOCK.

ENGINE.

No. 590,656. Patented Sept. 28, 1897.

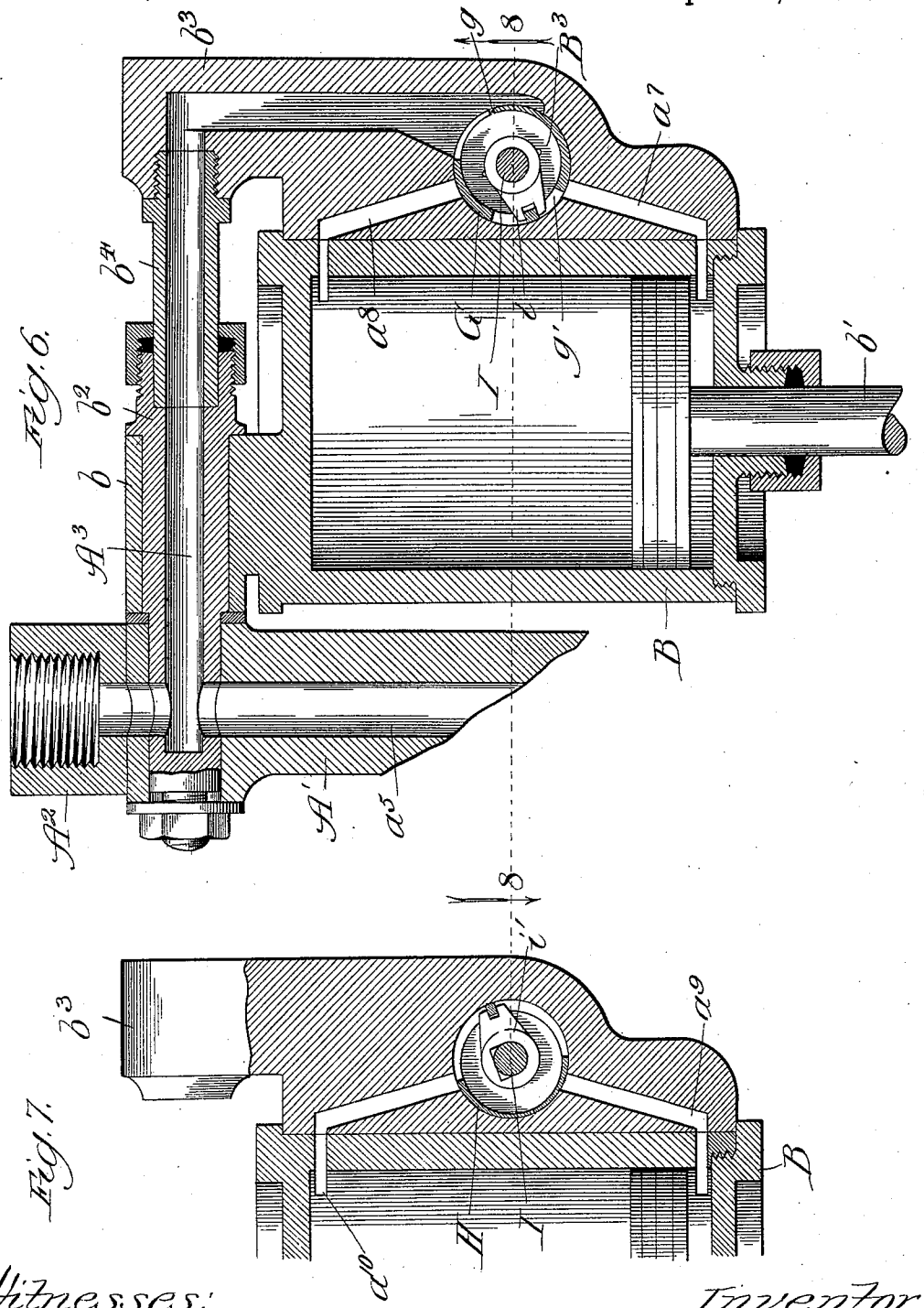

Fig. 6.

Fig. 7.

Witnesses:
Chas. E. Gaylord.
Lute J. Otis.

Inventor.
Francis M. Comstock.
By Banning & Banning & Sheridan,
Attys.

THE NORRIS PETERS CO., PHOTO-LITHO., WASHINGTON, D. C.

(No Model.) 5 Sheets—Sheet 5.

F. M. COMSTOCK.

ENGINE.

No. 590,656. Patented Sept. 28, 1897.

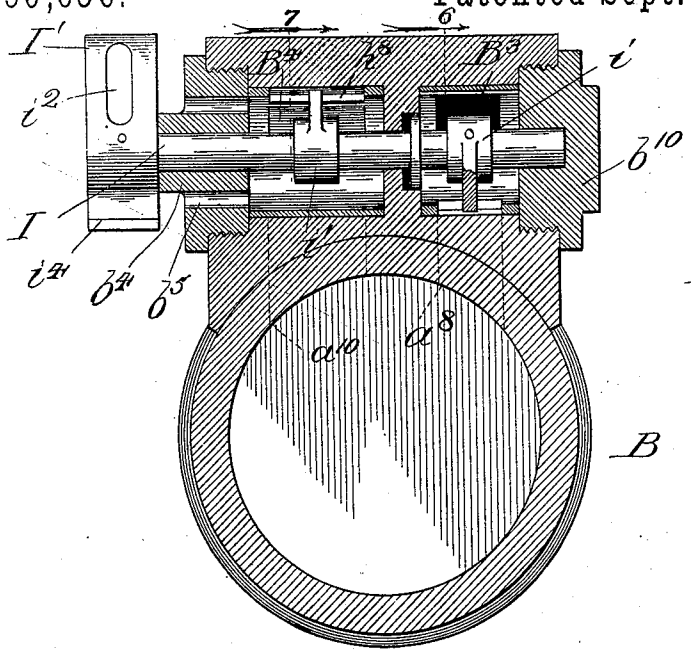

Fig. 8.

Fig. 9.

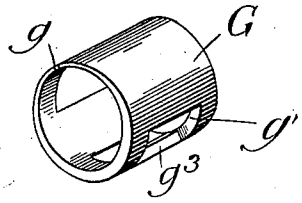

Fig. 12.

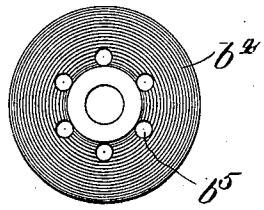

Fig. 10.

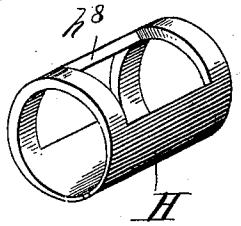

Fig. 11.

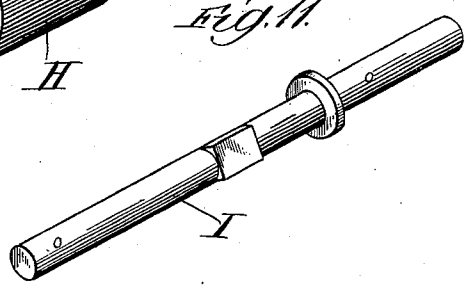

Witnesses:
Chas. E. Gaylord
Lute L. Alter

Inventor:
Francis M. Comstock,
By Banning & Banning & Sheridan,
Att'ys.

THE NORRIS PETERS CO., PHOTO-LITHO., WASHINGTON, D. C.

UNITED STATES PATENT OFFICE.

FRANCIS M. COMSTOCK, OF TOPEKA, KANSAS, ASSIGNOR TO THE COMSTOCK MOTOR COMPANY, OF SAME PLACE.

ENGINE.

SPECIFICATION forming part of Letters Patent No. 590,656, dated September 28, 1897.

Application filed April 6, 1896. Serial No. 586,276. (No model.)

To all whom it may concern:

Be it known that I, FRANCIS M. COMSTOCK, a citizen of the United States, residing at Topeka, Kansas, have invented certain new and useful Improvements in Engines, of which the following is a specification.

My invention relates particularly to fluid-pressure engines or motors, and especially to that class of engines known as "multiple" engines, in which direct pressure is admitted to all of the cylinders.

The principal object of my invention is to provide a simple, economical, and efficient multiple engine particularly adapted to generate and transmit power to a crank-shaft in a uniform manner; and the invention consists principally in combining with a frame or base portion three oscillating cylinders, one of which is arranged substantially at right angles with the other two.

The invention further consists in the combination of a frame or base portion, three oscillating cylinders pivoted thereto, one of which is arranged at right angles with the other two and provided with a piston of a larger diameter than the other two, a crank-shaft rotatably mounted in the frame or base portion, and piston-rods connecting the pistons of the cylinders with the crank-shaft, so that the outer end of one of the rods travels in a path eccentric to the other two.

The invention consists, further, in the combination of a cylinder provided with a reciprocating piston-rod, inlet and exhaust passages, a vibratory balance-valve in such passages adapted to open and close the passages, and means for operating such valve or valves to close the exhaust and open the inlet passage at one end and open the proper exhaust and partially open the inlet passage at the other end during one motion of the piston and complete the opening of the partially-opened inlet-valve during the opposite motion of the piston.

The invention consists, finally, in the features, combinations, and details of construction hereinafter described and claimed.

In the accompanying drawings, Figure 1 is a plan view of an engine having my improvements, looking at the same from the top; Fig. 2, a side elevation of the same, partly in section, taken on the line 2 2 of Fig. 1 and showing the valve-motion in one position. Fig. 3 is a side elevation of the cylinder and valve-motion shown in Fig. 2 and detached from the base and other parts and showing the valve-motion of the opposite position; Fig. 4, a plan view of the bottom of the frame or base portion, with the operative parts removed; Fig. 5, a transverse section of the frame or base portion taken on the line 5 of Fig. 4. Fig. 6 is an enlarged view of a longitudinal section of the main cylinder, taken through the inlet-valve and on line 6 of Fig. 8. Fig. 7 is a similar view of a portion of the cylinder, taken through the exhaust-valve on the line 7 of Fig. 8. Fig. 8 is a transverse section of the main cylinder, taken through the inlet and exhaust valves on lines 8 of Figs. 1, 6, and 7. Fig. 9 is a perspective view of the balanced inlet-valve; Fig. 10, a similar view of the exhaust-valve; Fig. 11, a perspective view of the valve-rod, and Fig. 12 an end elevation of the plug through which the fluid-pressure is exhausted into the open air.

In the art to which this invention relates, and particularly in the use of multiple engines known as the "Brotherton" engines, where three cylinders are arranged at about ninety degrees to each other, it is well known that the crank-shaft is apt to run irregular even when provided with heavy balance or driving pulleys.

The principal object of my invention therefore is to overcome this objection and so arrange the cylinders in relation to each other that they practically form a T with the large diameter cylinder on the long arm or perpendicular to the other two. This practically secures a uniform motion even when the crank-shaft is running at a low rate of speed for the reason that the piston-rod of the large cylinder breaks or overcomes the dead-center of the two smaller cylinders, while the two smaller cylinders act to overcome the dead-center and compensate for the larger superficial area of the piston of the large cylinder. This object is further attained by securing the outer free ends of the two small piston-rods to the wrist-pin of the crank-shaft

in such a manner that they travel in a path eccentric to the path or orbit of the outer free end of the large piston-rod.

In constructing an engine embodying my improvements I use a base or frame portion A of the desired size, shape, and strength necessary to hold the different parts in their operative positions. The frame in this particular type of engines and as shown in the drawings is preferably and substantially T-shaped, which forms three extending arms a a' a^2, two of which are substantially at right angles or perpendicular to the central arm. To the central or long portion of the T-shaped frame is secured the main cylinder B, which is preferably of larger diameter than the others and which is pivoted at its forward end, as at b, to the frame portion, so that it may oscillate as required in order to accommodate its piston-rod b' with the path or travel of the wrist-pin c of the crank-shaft C. To the T portions of the frame—that is, the arms a' a^2—I secure two cylinders D and E, of substantially smaller diameter than the main cylinder and practically at right angles thereto, so that their united force or action can be used to overcome the dead-center of the main piston-rod and the main piston-rod can be used to overcome their dead-centers, respectively. These smaller cylinders, like the main cylinder, are pivoted to the main portion at d and e (shown particularly in Fig. 4) in such a manner that they may likewise oscillate to accommodate the movements of their pistons as the crank-shaft rotates. The piston-rods d' and e' of the smaller cylinders are connected to a block F, that is rotatably mounted on the wrist-pin of the crank-shaft at a point eccentric to the wrist-pin, so that they travel in a path eccentric to the path of travel of the outer free end of the main piston-rod. This path of travel is not only eccentric to the path of travel of the main piston-rod, but it is also slightly larger in diameter. In the model from which these drawings were made the main piston-rod has a reciprocating movement of two inches, while the smaller piston-rods have a reciprocating movement of about two inches and an eighth.

In Figs. 6 and 7 the main cylinder and its casing, with the method of pivoting the cylinder to the base, is shown in longitudinal section. This is only shown in connection with one cylinder, preferably the main cylinder; but it will be understood that the mechanism for pivoting all the cylinders, as well as the exhaust and inlet passages, exhaust and inlet valves, are substantially the same in all, so that a description and drawing of one is practically a description and drawing of all. In the lower part of the frame or base, as shown in Fig. 4, it will be seen that there is a rib A', provided with a passage a^5. This is the inlet-passage to which the inlet-pipe A^2 is connected and which is provided with a throttle-valve A^3, the cylindrical perforation or opening a^6 being the opening that leads to the pivotal portion b of the main cylinder. The cylinder, as hereinbefore stated, is pivotally mounted upon the frame or base portion by means of its projecting lug being bored to fit a hollow stud b^2. The cylinder is further provided with an extending portion b^3, which also forms the valve-casing, and interposed between this and the pivot-stud is a hollow tube b^4, which forms a continuation of the inlet-pipe through which the fluid-pressure is admitted direct to the cylinder, as hereinafter described. To furnish fluid-pressure to the main cylinder and similarly to all of the cylinders this pivot-stud, tube, and casing is provided with a continuous passage A^3, leading, by means of the branches a^7 and a^8, to each end of the cylinder behind and in front of the movable piston, so that the cylinder may vibrate or oscillate as necessary and no interruption of the fluid-pressure will occur other than that performed by the inlet and exhaust valves, as hereinafter described.

In examining Fig. 8 it will be seen that the inlet-passages for the cylinder are at one side of the longitudinal center of the cylinder, and to furnish an outlet or exhaust for the fluid-pressure I provide exhaust-passages a^9 and a^{10} at the opposite side of the longitudinal center of the cylinder, as shown particularly in Figs. 8 and 9. These passages of the cylinder—inlet and exhaust—lead to centrally and transversely located cylindrical openings B^3 and B^4, which, as shown in Fig. 6, B^3 is connected to the port or inlet opening and the other, B^4, furnishes the exhaust-opening, B^4 being provided with a plug b^4, having a number of small perforations b^5, through which the pressure as it is admitted may pass into the open air.

To furnish mechanism by which the admission or exhaust of the fluid-pressure is regulated, I provide a cylindrical balance-valve G and insert it in the chamber B^3, and thus form the inlet-valve. This valve, as above stated, is preferably cylindrical in form and is split at g, so that when it is fitted into the chamber it is pressed together, so that after entering the chamber it expands and tightly fits the bore, which enables it in a measure to take up the wear and also furnish a good seat. This inlet-valve is provided with a circumferential opening g', so arranged that when the valve is in one position, as shown in Fig. 6, it opens communication between the main inlet-passage and the passage a^7 back of the movable piston to admit pressure thereto and closes communication between the main inlet-passage and the passage a^8 until the valve has been moved to the opposite limit of its motion.

The exhaust-valve H is constructed substantially the same as the inlet-valve, both of which are shown in perspective in Figs. 9 and 10, with the exception that it is slightly longer, so as to afford larger openings and enable the fluid-pressure to exhaust as rapidly as desired.

In Fig. 7 the exhaust-valve is shown in such

a position that it connects the main exhaust-opening with the small passage a^{10}, so as to allow the fluid-pressure to be exhausted from the front of the movable piston, while it closes communication between the main exhaust-opening and the passage a^9, so as to prevent any exhaust of the pressure to the rear of the movable cylinder. To operate these valves as desired, I provide an oscillating valve-rod I mounted in suitable bearings in the valve or cylinder casing and concentric with the balanced valves. In Fig. 8 it will be seen that it has its bearing portions in the plugs b^4 and b^{10}, which fit the exhaust and inlet valve bases, respectively. This valve-rod is provided with fingers i and i', which engage ribs or portions g^8 and h^8 of the inlet and exhaust valves, respectively, so as to vibrate the same simultaneously with the vibrations or oscillations of the valve-rod. The valve-rod is provided at its outer end with an arm I', having portions extending to each side of the center, the relatively upper portion of which is preferably perforated, as at i^2, to enable a segmental portion k of a valve-tappet K to pass through the same. The segmental valve-tappet K is pivoted, preferably, to the cylinder-frame at k' and provided with a lower extending portion k^2, which is connected by means of a connecting-rod k^3 and stud k^6 with the front portion of the movable piston-rod, so that the reciprocating movements of this rod impart a vibratory motion to the valve-tappet and thereby operate the inlet and exhaust valve, as hereinafter described.

When the piston-rod approaches its outer limit of motion, as shown in Fig. 2, one portion of the segmental valve-tappet contacts the arm of the valve-rod, moving the same toward the left, so as to move the inlet and exhaust valves, as shown in Fig. 6, to close the inlet-passage in front of the moving cylinder, open the exhaust-passage at the same end, partially open the inlet-passage to the rear of the movable piston, and close the exhaust-passage at the same end. When the piston brings its opposite or forward motion, the upper portion of the segmental tappet is vibrated to the right, and its cam portion k^4 contacts the lower portion i^4 of the valve-rod arm, so as to move or operate such valve-rod and inlet-valve to completely open the partially-opened passage in the rear of the movable piston and admit fluid-pressure at full amount. The piston-rod continuing its forward motion as it reaches the limit of the same, the valve-arm is contacted by the segmental portion, so as to move the inlet and exhaust valves to close the inlet completely in the rear of the movable piston, open the exhaust-passage at the same end, close the exhaust-passage at the opposite end of the cylinder, and partially open the proper inlet-passage at the same end of the cylinder. By this mechanism it will be seen that during the operations of the piston or rotations of the crank-shaft the inlet-passage is partially opened before the piston completes its entire stroke, which admits fluid-pressure to the opposite end of the cylinder to act partially as a cushion to the piston and partially to overcome at the proper time the movement of the piston and give it an opposite motion.

In the drawings I have shown my invention as adapted for drilling or tapping purposes and as being provided at one end with a rotatable shaft L, carrying a socket l, which may be adapted for holding either taps or drills. The upper portion of this rotating shaft is provided with a gear M, engaging with a pionion m on the crank-shaft, all of which are held in place by means of an auxiliary frame or casing N. A hand-wheel O is supplied to the lower portion of the crank-shaft to be used for any purpose desired. The frame is also provided with a handle P to assist in holding it in desired position, while a screw-thread socket R is shown engaged in the drawings engaging with a screw-stud r, directly in line with the rotating shaft for the purpose of feeding such shaft and frame forward when tapping or drilling.

While I have described my invention with more or less minuteness as regards detail and as being embodied in certain precise forms, I do not desire to be limited thereto unduly any more than is pointed out in the claims. On the contrary, I contemplate all proper changes in form, construction, and arrangement, the omission of immaterial parts, and substitution of equivalents as circumstances may suggest or render expedient.

I claim—

1. In a multiple engine, the combination of a frame or base portion, three oscillating cylinders pivotally secured thereto, one of which is of larger diameter than the other two and secured to the frame or base portion at a right angle to the other two cylinders, a rotatable crank-shaft mounted in the frame or base portion, and reciprocating piston-rods connected with the crank-shaft, substantially as described.

2. In a multiple engine, the combination of a frame or base portion, three oscillating cylinders pivoted thereto, one of which has a larger diametrical bore and arranged substantially at right angles to the other two, a crank-shaft rotatably mounted in the frame or base portion, reciprocating pistons in the cylinders, and piston-rods connected with such pistons and extending out of the cylinders and connected with the crank-shaft so that the outer end of one of such rods travels in a path eccentric to the other two, substantially as described.

3. In a multiple engine, the combination of a frame or base portion, three oscillating cylinders pivoted thereto, one of which has a larger diametrical bore and is arranged substantially at right angles with the other two, a crank-shaft rotatably mounted in the frame or base portion, reciprocating pistons in such cylinders, and piston-rods on the pistons and

secured to the crank-shaft the outer end of the piston-rod of the larger piston travels in a path eccentric to the other two while the piston-rods of the two smaller pistons make a relatively larger movement, substantially as described.

4. In a fluid-pressure engine, the combination of a frame or base portion, a cylinder thereon having inlet and exhaust passages, a reciprocating piston and rod in the cylinder portion, cylindrical balanced valve or valves in the inlet and exhaust passages of the cylinder portion, a valve-rod for vibrating such valve or valves provided with an arm at its outer end, a segmental vibrating valve tappet or lever arranged to move with the piston and contact the valve-arm to close the proper inlet and exhaust passage, open the proper exhaust-passage and partly open the inlet-passage of the cylinder during one motion of the piston and completely open such last-named inlet during the opposite movement of the piston, substantially as described.

5. In a fluid-pressure engine, the combination of a frame or base portion provided with a cylinder having inlet and exhaust passages leading to each end, a reciprocating piston and rod mounted thereon, a cylindrical balanced valve or valves in such passages to close or open the same, a valve-rod for operating such valve or valves, an actuating-arm on its outer free end, and a segmental vibrating tappet arranged to be vibrated by the movements of the piston-rod having one portion arranged to contact the valve-arm and operate the valve to close the proper exhaust and inlet passages, open the proper exhaust, partly open the proper inlet-passage during one movement of the piston, and a second or cam portion arranged to contact the opposite portion of the valve-arm and completely open the last-named inlet-passage, substantially as described.

FRANCIS M. COMSTOCK.

Witnesses:
THOS. F. SHERIDAN,
D. A. MULVANE.