Office de la Propriété Intellectuelle du Canada
Un organisme d'Industrie Canada

Canadian Intellectual Property Office
An agency of Industry Canada

CA 2574164 C 2013/08/06

(11)(21) **2 574 164**

(12) **BREVET CANADIEN**
CANADIAN PATENT

(13) **C**

(86) Date de dépôt PCT/PCT Filing Date: 2005/06/20
(87) Date publication PCT/PCT Publication Date: 2006/01/26
(45) Date de délivrance/Issue Date: 2013/08/06
(85) Entrée phase nationale/National Entry: 2007/01/17
(86) N° demande PCT/PCT Application No.: EP 2005/006699
(87) N° publication PCT/PCT Publication No.: 2006/007923
(30) Priorité/Priority: 2004/07/19 (EP04254313.2)

(51) Cl.Int./Int.Cl. *A23G 9/44* (2006.01), *A23G 9/32* (2006.01), *A23G 9/48* (2006.01), *A23L 1/212* (2006.01), *A23L 1/24* (2006.01)

(72) Inventeurs/Inventors:
ALDRED, ALEXANDER, GB;
BINLEY, GARY NORMAN, TH;
CHAMBERLAIN, DOROTHY MARGARET, GB;
LINDNER, NIGEL MALCOLM, GB

(73) Propriétaire/Owner:
UNILEVER PLC, GB

(74) Agent: RIDOUT & MAYBEE LLP

(54) Titre : PRODUITS CONTENANT DE LA GLACE
(54) Title: ICE-CONTAINING PRODUCTS

(57) Abrégé/Abstract:
A method is provided for producing an ice-containing product which method comprises in the following order: (i) cooling a product concentrate to a temperature of below -4 °C; (ii) combining the cooled concentrate with frozen particles, a substantial proportion of which have a particle size of greater than 5 mm; and (iii) mechanically reducing the size of the frozen particles such that substantially all of the resulting frozen particles have a size of greater than 0.5 mm and less than 5 mm.

(12) INTERNATIONAL APPLICATION PUBLISHED UNDER THE PATENT COOPERATION TREATY (PCT)

(19) World Intellectual Property Organization
International Bureau

(43) International Publication Date
26 January 2006 (26.01.2006)

PCT

(10) International Publication Number
WO 2006/007923 A1

(51) International Patent Classification[7]: A23G 9/02, 9/44, 9/32, 9/48, A23L 1/212, 1/24

(21) International Application Number: PCT/EP2005/006699

(22) International Filing Date: 20 June 2005 (20.06.2005)

(25) Filing Language: English

(26) Publication Language: English

(30) Priority Data:
04254313.2 19 July 2004 (19.07.2004) EP

(71) Applicant *(for AE, AG, AU, BB, BW, BZ, CA, CY, EG, GB, GD, GH, GM, IE, IL, KE, LC, LK, LS, MN, MW, NA, NG, NZ, OM, PG, SC, SD, SG, SL, SZ, TT, TZ, UG, VC, ZA, ZM, ZW only)*: **UNILEVER PLC** [GB/GB]; Unilever House, Blackfriars, London Greater London EC4P 4BQ (GB).

(71) Applicant *(for AL, AM, AT, AZ, BA, BE, BF, BG, BJ, BR, BY, CF, CG, CH, CI, CM, CN, CO, CR, CU, CZ, DE, DK, DM, DZ, EC, EE, ES, FI, FR, GA, GE, GN, GQ, GR, GW, HR, HU, ID, IS, IT, JP, KG, KM, KP, KR, KZ, LR, LT, LU, LV, MA, MC, MD, MG, MK, ML, MR, MX, MZ, NE, NI, NL, NO, PH, PL, PT, RO, RU, SE, SI, SK, SM, SN, SY, TD, TG, TJ, TM, TN, TR, UA, UZ, VN, YU only)*: **UNILEVER NV** [NL/NL]; Weena 455, NL-3013 AL Rotterdam (NL).

(71) Applicant *(for IN only)*: **HINDUSTAN LEVER LIMITED** [IN/IN]; Hindustan Lever House, 165/166 Backbay Reclamation, Maharashtra, Mumbai 400 020 (IN).

(72) Inventors; and
(75) Inventors/Applicants *(for US only)*: **ALDRED, Alexander** [GB/GB]; Unilever R & D Colworth, Sharnbrook, Bedford Bedfordshire MK44 1LQ (GB). **BINLEY, Gary, Norman** [GB/TH]; Unilever Thai Holdings Ltd, Lardkrabang Industrial Estate, 63 Moo 4 Chalongkrung Road, Bangkok, 10520 (TH). **CHAMBERLAIN, Dorothy, Margaret** [GB/GB]; Unilever R & D Colworth, Sharnbrook, Bedford Bedfordshire MK44 1LQ (GB). **LINDNER, Nigel, Malcolm** [GB/GB]; Unilever R & D Colworth, Sharnbrook, Bedford Bedfordshire MK44 1LQ (GB).

(74) Agent: **FINNIE, Nicholas**; Unilever Intellectual Property Group, Patent Department, Colworth House, Sharnbrook, Bedford Bedfordshire MK44 1LQ (GB).

(81) Designated States *(unless otherwise indicated, for every kind of national protection available)*: AE, AG, AL, AM, AT, AU, AZ, BA, BB, BG, BR, BW, BY, BZ, CA, CH, CN, CO, CR, CU, CZ, DE, DK, DM, DZ, EC, EE, EG, ES, FI, GB, GD, GE, GH, GM, HR, HU, ID, IL, IN, IS, JP, KE, KG, KM, KP, KR, KZ, LC, LK, LR, LS, LT, LU, LV, MA, MD, MG, MK, MN, MW, MX, MZ, NA, NG, NI, NO, NZ, OM, PG, PH, PL, PT, RO, RU, SC, SD, SE, SG, SK, SL, SM, SY, TJ, TM, TN, TR, TT, TZ, UA, UG, US, UZ, VC, VN, YU, ZA, ZM, ZW.

(84) Designated States *(unless otherwise indicated, for every kind of regional protection available)*: ARIPO (BW, GH, GM, KE, LS, MW, MZ, NA, SD, SL, SZ, TZ, UG, ZM, ZW), Eurasian (AM, AZ, BY, KG, KZ, MD, RU, TJ, TM), European (AT, BE, BG, CH, CY, CZ, DE, DK, EE, ES, FI, FR, GB, GR, HU, IE, IS, IT, LT, LU, MC, NL, PL, PT, RO, SE, SI, SK, TR), OAPI (BF, BJ, CF, CG, CI, CM, GA, GN, GQ, GW, ML, MR, NE, SN, TD, TG).

Published:
— *with international search report*

For two-letter codes and other abbreviations, refer to the "Guidance Notes on Codes and Abbreviations" appearing at the beginning of each regular issue of the PCT Gazette.

(54) Title: ICE-CONTAINING PRODUCTS

(57) Abstract: A method is provided for producing an ice-containing product which method comprises in the following order: (i) cooling a product concentrate to a temperature of below -4 °C; (ii) combining the cooled concentrate with frozen particles, a substantial proportion of which have a particle size of greater than 5 mm; and (iii) mechanically reducing the size of the frozen particles such that substantially all of the resulting frozen particles have a size of greater than 0.5 mm and less than 5 mm.

WO 2006/007923 A1

ICE-CONTAINING PRODUCTS

Field of the invention

The invention relates to a process for making ice-containing products with improved product flow/softness characteristics and a process for production of such products.

Background to the invention

A desirable quality in ice cream consumption is for softer eating products that not only make the physical effort of serving and eating easier (e.g. scoopability) but also improve the sensory delivery through softer texture and improved flavour delivery. Recent approaches to improving this soft eating sensation include manipulation of the level and molecular weight of the added sugars. Manipulations of these sugars can however not only change the sweetness of the end product but also in these health conscious times increase the calorific value of the product. It is therefore desirable to be able to improve the softness of frozen confections with similar or if possible reduced sugar content.

Summary of the invention

We have developed a process for producing ice confections, sauces and other ice-containing products that are softer than the equivalent products having the same ingredients and ice content and made by conventional processes. The process of the invention involves manipulating the ice phase by adding some of the ice present in the final product as large particles in the mm size range (as compared with the typical ice crystal size of less than 0.1 mm). We have found that not only is it important that the larger ice crystals are above a certain size, but also that the ratio of the weight of the population of large ice crystals to the weight of the population of small ice crystals is important in providing an optimum product.

The resulting products are softer, for example having improved spoonability and/or scoopability when taken straight from the freezer, i.e. at about –18°C. It is

also possible to produce ice confections that are squeezable when taken straight from the freezer.

Accordingly, the present invention provides a method of producing an ice-containing product which method comprises in the following order:

(i) cooling a product concentrate to a temperature of below–4°C, preferably below–6°C or –8°C;

(ii) combining the cooled concentrate with frozen particles, a substantial proportion of which have a particle size of greater than 5 mm;

(iii) mechanically reducing the size of the frozen particles such that substantially all of the resulting frozen particles have a size of greater than 1 mm and less than 5mm; and optionally

(iv) lowering the temperature of the product obtained in step (iii) to a temperature of –18°C or lower.

Preferably the ice-containing product is an ice confection or a frozen sauce.

Preferably the product concentrate is a confectionery product concentrate, such as a frozen confectionery premix concentrate, or a sauce concentrate.

In one embodiment, the method further comprises a step (v) of adding an aqueous liquid to the product obtained in step (iii) or step (iv).

In one embodiment, the frozen particles are ice particles. In another embodiment the second population of frozen particles are frozen food particles.

In a related aspect the present invention provides an ice-containing product obtainable by the method of invention. Also provided is an ice-containing product obtained by the method of invention.

Detailed description of the invention

Unless defined otherwise, all technical and scientific terms used herein have the same meaning as commonly understood by one of ordinary skill in the art (e.g. in frozen confectionery manufacture). Definitions and descriptions of various terms and techniques used in frozen confectionery manufacture are found in Ice Cream, 4th Edition, Arbuckle (1986), Van Nostrand Reinhold Company, New York, NY.

Tests and Definitions

Total Ice Content

Total ice content is measured by adiabatic calorimetry as described by de Cindio and Correra in the Journal of Food Engineering (1995) 24 pp.405-415. Calorimetric techniques, particularly adiabatic calorimetry, have proved to be the most suitable, since they can be used on complex food systems, and do not require any other information about the food, such as composition data, unlike some of the other techniques. The larger measured sample size (80g) allows measurement of heterogeneous samples such as those claimed with varied ice particle sizes.

Size, Area Size and Volume

Frozen particles are 3-dimensional objects, often of an irregular shape. However, methods for viewing and measuring such particles are often 2-dimensional (see below). Consequently, measurements are often made solely in one or two dimensions and converted to the required measurement.

By "area size", we mean the maximum area as seen in the image plane (i.e. when viewed using optical imaging). Typically at least 500 particles should be measured.

The size and volume of a particle can be calculated from an area size measurement by assuming a regular shape for the particle and calculating the size or volume on that basis. Typically, the assumed regular shape is a sphere

and therefore the size is 2 X the square root of (the area size/pi). This is described in detail below.

Measurements are made at –10°C or –18°C. However, size, area and volume measurements made at –10°C, whilst easier to perform, will need to be converted to an equivalent at –18°C as described below. Measurements are made at standard pressure.

Ice Particle Size Distribution

The ice particle size distribution of a frozen product can be measured as follows.

Sample Preparation

All equipment, reagents and products used in sample preparation are equilibrated to the measurement temperature (-10°C) for at least 10 hours prior to use.

A 10 gm sample of the frozen product is taken and added to 50 cm^3 of dispersing solution (20% ethanol in aqueous solution) and gently agitated for 30s or until the sample has completely dispersed into single particles. The whole ice / ethanol / water mix is then gently poured into a 14 cm diameter petri dish – ensuring complete transfer and again gently agitated to ensure even dispersal of the ice particles in the dish. After 2 s (to allow for cessation of particle movement) an image is captured of the full dish.

Ten replicate samples are taken for each product.

The aqueous ethanol dispersing solution can be designed to match the measurement conditions of the experimental system – see 'Concentration properties of Aqueous solutions: conversion tables' in "Handbook of Chemistry and Physics", CRC Press, Boca Raton, Florida, USA.

Imaging

Images can be acquired using a domestic digital camera (e.g. JVC KY55B) with its macro-lens assembly as supplied. The camera is selected to provide sufficient magnification to reliably image particles with an area size from 0.5 mm^2 to greater than 50 mm^2. For imaging, the petri dish containing the sample was placed on a black background and illuminated at low angle (Schott KL2500 LCD) to enable the ice to be easily visualised as bright objects.

Analysis

Image analysis was conducted using the Carl Zeiss Vision KS400 Image analysis software (Imaging Associates Ltd, 6 Avonbury Business Park, Howes Lane, Bicester, OX26 2UA) with a macro programme specifically developed to determine the area size of each particle in the image. User intervention is required to remove from the image: the edge of the petri dish, air bubbles, coincidentally connected ice particles and any residual undispersed material. Of these features, only the apparent connection between ice particles is relatively frequent.

The 10 samples taken allow for the sizing of at least 500, and typically several thousand, particles for each product characterised. From this image analysis it is possible to calculate two defining characteristics of the larger ice particles (above 0.5mm^2) that are structuring these systems:

(i) the range and mean of the diameters of the larger included particulate ice.

(ii) the volume and hence weight that the larger included particulate ice made to the original 10 g sample.

The estimate of volume of the larger ice particle size is made by converting the two-dimensional area analysis into a calculated volume, ϕ_L. This is done according to the measured diameter of each ice particle. Hence:

1. For spherical particles (such as particles smaller than the gap size 'd' of the cutting blades of the crushing pump of Figure 1) where the particles are assumed

to be spherical) the measured area is converted to an equivalent circle area with associated, diameter and radius. This equivalent radius is then used to calculate the equivalent volume sphere (mm^3). The diameter represents the particle "size" in terms of length.

2. For non-spherical particles, the calculations will depend on the shape. For example those larger than the gap size 'd' of the cutting blades of the crushing pump of Figure 1, the particles are assumed to be planar disks with area as measured and a thickness given by the cutting blades 'd' to yield the particle volume (mm^3).

Additionally, the temperature at which measurements are made (-10°C) could be different from the production or storage temperature of the product. In this case it is necessary to estimate the 'difference' in the amount of ice from the original system. This estimate can be made using the methodology described in WO98/41109 or by direct calorimetric measurement as described in de Cindio and Correra (ibid). The 'difference' amount is then attributed back to each measured ice particle on a basis linearly proportionate to its measured volume to provide the final estimate of the volume of ice and the volume size distribution of the ice in the original sample.

The estimated volume of the larger ice measured by this image analysis procedure therefore also yields the weight of larger ice ϕ_L in initial products by multiplying the estimated volume by the known density of ice.

Proportion of larger added ice and smaller ice

The amount by weight of total ice ϕ_T can be measured using adiabatic calorimetry (described above).

From this the proportion by weight of the smaller ice, ϕ_S can be calculated by deducting the weight of larger added ice (ϕ_L), calculated in the preceding section, from the total ice content where,

$$\phi_S = \phi_T - \phi_L$$

The ratio of larger to smaller ice is then ϕ_L / ϕ_S

Total Solids

The dry weight of the system as measured by the oven drying method as described in Ice Cream 6th Edition, Marshall et al. (2003), p296.

Hardness Test (Vickers)

The Vickers hardness test is an indentation test that involves pushing a pyramid shaped indentor into the surface of a material and recording the force applied as a function of tip displacement. Force and displacement are measured during the indentation loading cycle and the unloading cycle.

The Vickers pyramid geometry is an engineering industry standard (Bsi 427,1990). It has an apex angle at the tip of 136°. Hardness is determined as $H_V = F_{max} / A$ where H_V is the Vickers Hardness, F_{max} is the maximum applied force (see Fig.) and A is the projected area of the indentation left in the material surface. The area A is determined by assuming the indentation has the same geometry as the indentor that formed it and therefore the projected area can be determined from the indent depth given by d_I (Fig) then $A = 24.5\ d_I^{\ 2}$. The Vickers Hardness of a material is a measure of the material's resistance to plastic deformation.

The test samples were collected in small pots and after hardening (-25°C) equilibrated at the test temperature (-10°C or -18°C) overnight beforehand. Measurements were conducted on a universal testing machine made by Instron (Code 4500) within a temperature controlled cabinet at -18°C. The crosshead speed was 2mm/min. The maximum load was 95N. The pyramid tip was pushed into the surface of the material to a depth of 1.5mm for a water ice or sorbet and 2.5mm for an ice cream.

Except in the examples, including any comparative examples, or where otherwise explicitly indicated, all numbers in the description and claims should be understood as modified by the word "about".

Process for manufacturing ice-containing products

The process of the invention involves generating some of the ice by normal freezing of one portion of the product, which contains a lower percentage of water/ice than the final product, and generating the remainder of the ice separately as relatively large particles in the mm range. The large particles of ice are then added to the frozen concentrate, mixed, and the size of the large ice particles mechanically reduced to the desired size of 0.5 mm or above. The advantage of this process is that it is possible to reduce the weight of smaller ice produced because fewer ice crystals form in the frozen concentrate than would be the case with the normal strength formulation. This then allows a substantial amount of larger ice made separately to be added and the mixture processed to generate the desired bimodal population with the desired ratio of small ice to large ice.

Concentrates typically have total solids contents of at least 35% by weight, preferably at least 40% or 45% by weight. The total solids content is typically at most 65%, preferably at most 60%, since it is difficult to process very high solids content concentrates. In contrast, end products typically have total solids contents of 30% or less.

The concentrate is cooled to a temperature of below –4°C, preferably below –6°C, –8°C or –10°C. Typically, this is achieved by freezing the concentrate in an ice cream freezer (e.g. scraped surface heat exchanger).

The large frozen particles, a substantial proportion of which have a size of equal to or greater than 5 mm can, for example, be generated in a fragmented ice maker such as that described in US Patent No. 4,569,209. It will be appreciated that when making the large frozen particles for inclusion in the mix, a small

proportion may have particles of a size of less than 5 mm. According the phrase "a substantial proportion" means that at least 90%, more preferably 95%, of the particles have a size of equal to or greater than 5 mm.

The large frozen particles are then mixed in with the cooled/frozen concentrate. This can for example be achieved by feeding the large frozen particles through a fruit feeder into the cooled/frozen concentrate exiting the ice cream freezer.

The amount of frozen particles (wt% of the final product) that is added is preferably at least 22 wt%, more preferably at least 25, 30 or 35 wt%. Typically the amount of frozen particles added is less than 70 or 60 wt%.

The frozen particles are typically ice and/or a frozen edible material, such as fruit pieces, fruit juice, vegetable pieces, chocolate or couvertures, dairy products such as milk and yoghurt, sauces, spreads and food emulsions, confectionery pieces (e.g. candy, marshmallow, fudge) or caramel.

The particle size reduction step involved mechanically reducing the size of the added large frozen particles to the desired size. In a preferred embodiment, this can performed by passing the mix through a constriction of a size, *d*, less than 5 mm, preferably of from greater than 0.5 to 4 mm, more preferably greater than 0.75, 0.9 or 1 mm and less than 3.5 mm. This allows for in-line reduction of particle size and may comprise, for example, passing the mix through a pump comprising an outlet of size *d*, and/or passing the slush between parallel plates separated by a distance *d* and wherein one of the plates rotates relative to the other. An example of a suitable device is shown in Figure 1 and described in the Examples.

The mechanical size reduction step should be adjusted such that substantial proportion (as defined above) of the resulting particles will have a size of greater than 0.5 mm and less than 5 mm, preferably greater than 0.75, 0.9 or 1 mm and less than 4 or 3.5 mm.

The resulting product will then typically be subject to further treatment to lower its temperature to typical storage temperatures, such as -18°C or less, e.g. -25°C. The product may also, optionally, be subject to a hardening step, such as blast freezing (e.g. -35°C), prior to storage. Before serving, the product is generally tempered back to at least -18°C. In one embodiment, the product is warmed up to -10°C and served as a drink.

The ice-containing products obtainable by the process of the invention are preferably ice confections and include confections that typically contain milk or milk solids, such as ice cream, milk ice, frozen yoghurt, sherbet and frozen custard, as well as frozen confections that do not contain milk or milk solids, such as water ice, sorbet, granitas and frozen purees. Ice confections of the invention also include frozen drinks, such as milkshakes and smoothies, particularly frozen drinks that can be consumed at -10°C.

Preferably the products have a Vickers Hardness of less than 4 MPa at -18°C, more preferably less than 3 or 2 MPa at 18°C.

Ice-containing products of the invention may be in the form of concentrates, i.e. having a lower ice/water content (and therefore a higher solids content by wt%) than an equivalent normal strength product. Such concentrates can, for example, be diluted with an aqueous liquid, such as milk or water, to provide a refreshing drink.

The present invention will now be further described with reference to the following examples, which are illustrative only and non-limiting. The examples refer to Figures:

Figure 1A is a side-sectional view through a size reductive device for use in the method of the invention.

Figure 1B is a plan view of the lower plate shown in Figure 1A.

Figure 1C is a plan view of the upper plate shown in Figure 1A.

Figure 2 – is a chart showing the effect of ice size/addition on product hardness in a model system.

Figure 3 – is an electron micrograph of a product of the invention. Size bar = 1mm.

EXAMPLES

Process for manufacture

Preparation of Concentrate

All ingredients except for the flavour and acids were combined in an agitated heated mix tank and subjected to high shear mixing at a temperature of 65°C for 2 minutes. The resulting mix was then passed through an homogeniser at 150 bar and 70°C followed by pasteurisation at 83°C for 20 s and rapid cooling to 4°C using a plate heat exchanger. The flavour and acids were then added to the mix and the resulting syrup held at 4°C in an agitated tank for a period of around 4 hours prior to freezing.

Preparation of Ice Particles

A Ziegra Ice machine UBE 1500 (ZIEGRA-Eismaschinen GmbH, Isernhagen, Germany) was used to manufacture ice particles measuring approximately 5 x 5 x 5-7 mm.

Freezing of Concentrate

The concentrate was frozen using a typical ice cream freezer Crepaco W04 (scraped surface heat exchanger) operating with an open dasher (series 80), a mix flow rate of 120 l / hour, an extrusion temperature of –10 to -14°C and an overrun at the freezer outlet of 0 to 100%. Immediately upon exit from the freezer, the ice particles were fed into the stream of frozen concentrate using a fruit feeder Hoyer FF4000 (vane type) to form a slush. The flow rates of the concentrate from the freezer and the flow rate of ice addition were controlled to give the desired ice inclusion level.

The resulting slush was then passed through a size-reduction device. The size-reduction device (10) is schematically illustrated in Figures 1a to 1c and comprises the drive (20) and casing (11) of a centrifugal pump (APV Puma pump)

The generally cylindrical casing (11) has a tubular outlet (13) disposed at its edge and has a tubular inlet (12) located centrally in its base. Opposite the inlet (12) and located in the centre of the top of the casing (11) is an aperture (14) for receiving the drive shaft (20) of the centrifugal pump. The drive shaft (20) is in sealing engagement with the casing (11) owing to the presence of an annular seal (14a) located there between.

Located within the casing (11) is a pair of parallel plates (15, 25), being coaxially aligned with the casing (11) and spaced longitudinally from each other by a distance, *d*. The lower plate (15) is fixedly attached to the base of the casing (11) whilst the upper plate (25) is fixedly attached to the drive shaft (20). By means of its attachment to the drive shaft (20) the upper plate (25) is rotatable relative to the casing (11). In contrast, the lower plate (15) is stationary owing to its attachment to the casing (11).

The lower plate (15) comprises a disc (16) having an central aperture (18) therethrough which is in fluid communication with the inlet (12) of the casing (11). The whole of the bottom surface of the disc (16) is flat and in contact with the base of the casing (11). The top surface of the disc (16) tapers radially inwards towards the central aperture (18). Projecting upwards from the top surface of the disc (16) are a plurality, for example four, fins (17) spaced regularly around the circumference of the plate (15). Each fin (17) has an upper surface that extends radially inward from, and remains at a height level with, the outer edge of the top surface of the disc (16).

The upper plate (25) is similar to the lower plate (15) but inverted such that it is the top surface of the disc (26) that is flat and the bottom surface tapered. The

central aperture of the disc (26) of the upper plate receives the drive shaft (20) and the top surface of the disc (26) is slightly spaced longitudinally from the top of the casing (11) to allow the plate (25) to rotate freely. The top plate (25) may be provided with a different arrangement of fins to the lower plate (15) and in this case the upper plate (25) has three fins (27) whilst the lower (15) has four fins (17).

The size-reduction device (10) is arranged such that slush pumped in through the inlet (12) is required to pass between the parallel plates (15, 25) before it can exit through the outlet (13). The narrow spacing (*d*) of the plates along with the grinding action of the fins (27) on the rotating top plate (25) against the fins (17) of the bottom plate (15) ensures that the ice particles passing through the device have a maximum length of less than *d* in at least one dimension. This constriction size, *d*, can be varied from 0.1 to 5mm depending on product requirements.

Example 1 – Squeezeable Iced Drink Concentrates

The process of the invention was used to make a drinks product concentrate which is squeezeable. The concentrate can be squeezed from the container straight after being taken out of a freezer at –18°C and added to milk or water to give an iced drink. A lower amount of water is included in the formulation to create a concentrated mix. The remaining water (50%) is then added as ice from a Ziegra machine. A control sample was made where the formulation contains the usual amount of water: no ice was added during processing.

Ingredient	Concentrate Mix	Cherry Slush Product	Control
Water	47.12	23.56	73.56
Sucrose	9.6	4.8	4.8
Dextrose monohydate	14.4	7.2	7.2
Low fructose corn syrup (78% solids)	27.6	13.8	13.8
Guar gum	0.4	0.2	0.2

Cherry flavour	0.06	0.03	0.03
Red colour	0.02	0.01	0.01
Citric acid	0.8	0.4	0.4
Total solids	45.5	22.75	22.75
Overrun %	0	0	0
Added Ice %	0	50	0
Total ice at –18°C	------	64	64
Proportion of added ice %	------	78	0
Gap size of Crushing Pump (mm)	------	1.0	-----

Example 1: The ice cream freezer was run with the following settings: Mix flow of 65l/hour, overrun of 7%, barrel pressure of 2.5 bar, motor load of 110%, and an extrusion temperature of –13.1°C.

The size reduction device was run at a speed of 520rpm with a 1.5mm gap size setting. The in-line pressure was 1 Bar. The ice particles produced using the Ziegra machine were added at a rate of 1400g/min.

Comparative Example 1: The freezer was run with the following settings: Mix flow of 100l/hour, overrun of 7%, barrel pressure of 2.5 bar, motor load of 100%, and an extrusion temperature of –6.2°C.

The size reduction device was run at a speed of 520rpm with a 1.5mm gap size setting. The in-line pressure was 2-3 Bar.

Both samples were collected and hardened in a blast freezer before being stored at -25°C. Samples were analysed by using the Vickers Hardness test. The Vickers Hardness test is an indentation test that involves pushing a pyramid shaped indentor into the surface of material and recording the force applied as a function of tip displacement. Force and displacement are measured during the

indentation loading cycle and the unloading cycle. For water ices, the pyramid tip pushes into the surface of the material to a depth of 1.5mm, before it is pulled out.

Results:

The total solids of the concentrated mix with the addition of 50% ice from the Ziegra machine was measured to be 23.31%. The total solids of the mix with no added ice was measured to be 22.47%. Therefore both products were similar in total solids (and in agreement, within experimental error, with the value of 22.75% calculated from the solids contents of each of the ingredients).

The Instron Hardness test results were as follows:

Example 1 (Product with added ice)	3.02±0.24MPa
Comp. Example 1 (Product without added ice)	7.37±0.92MPa

The Hardness test results show that by manipulation of the ice phase, products can be made softer for the equivalent solid's level. The data show the significant reduction in hardness between the sample solely processed through the ice cream freezer and that with ice particles added and the size reduced after the freezer. The sample containing the ice particulate inclusion can be squeezed from a sachet by hand at -18°C whereas the product without the added particles cannot be squeezed out without product warming or manipulation.

This example has the added consumer advantage that it is a frozen concentrate which can be added to water or milk or other dilutant to create a drink containing ice. The softer frozen system containing the ice particulates can be stirred into the dilutant and dispersed readily to create the drink whereas the control requires considerable physical disruption to allow its break up and subsequent dilution. Once diluted the larger particulate ice remains to give a cool, flavoured and refreshing drink that can be consumed directly or sucked up through a straw. Other examples include those containing fruit concentrates and purees, flavoured ice teas and frozen milk shakes.

Example 2 - Soft Water-ices

This set of examples describes frozen water ice products according to the invention (Concentrates A to D) that are made with various proportions of Ziegra ice added into a concentrated mix frozen through a standard ice cream freezer (Crepaco W04), the combination then being subjected to ice particle size reduction as described above.

Ingredient	Control	Concentrate A	Concentrate B	Concentrate C	Concentrate D
Sucrose (%)	4.8	5.85	6.4	7.385	8.73
Low Fructose Corn Syrup (%) 78% solids	13.8	16.83	18.4	21.23	25.09
Dextrose Monohydrate (%)	7.2	8.78	9.6	11.08	13.09
Guar (%)	0.25	0.305	0.33	0.385	0.45
Citric acid (%)	0.4	0.488	0.53	0.615	0.727
Strawberry flavour (%)	0.2	0.24	0.27	0.308	0.36
Beetroot colour (%)	0.09	0.11	0.12	0.138	0.16
Total solids (%)	23.1	28.1	30.7	35.5	41.9
Water (%)	73.25	67.397	64.35	58.859	51.393
Added ice (%)	0	17	25	35	45
Total ice at –18°C (%)	64	64	64	64	64

Proportion of added ice	0	28	39	55	70
Gap size of crushing pump (mm)	N/a	0.15, 1.5, 3.0	0.15, 1.5, 3.0	0.15, 1.5, 3.0	0.15, 1.5, 3.0

Hardness testing (see method) of these samples shows a three-fold difference between the control sample with no post-added ice and those with added ice at various levels. This shows the benefit of the addition of larger ice and its subsequent size control over just freezing through the ice cream freezer alone.

Comparison of the samples containing added ice shows that the hardness is reduced still further for particulate ice added: (1) at a proportion of the total ice of from 40 to 70%; and (2) with a particle size diameter of 1.5 to 3mm (see Figure 2).

In each of the above the hardness can be halved so further optimising the benefit of a softer frozen product to the consumer. This 'softness' can be shown across a range of product formats and the following examples illustrate this:

Example 3 - Squeezable Ice Products

Ingredient (%)	Concentrate	Final Product	Control Product
Water	47.353	31.727	64.727
Dextrose monohydrate	21.538	14.43	14.43
Sucrose	12.308	8.246	8.246
Low fructose glucose syrup (78% solids)	12.308	8.246	8.246
Cranberry Juice (39.5% solids)	5.385	3.608	3.608
Citric acid	0.4	0.268	0.268
Locust bean gum	0.4	0.268	0.268
Grapefruit flavour	0.308	0.206	0.206
Total solids	44.7	30.0	30.0

Added ice (%)	------	33	0
Total ice at -18°C (%)	------	52	52
Proportion of added ice %	------	63%	0%
Gap size of crushing pump (mm)	------	1.0, 3.0	------

Example 3 shows a product that is made by addition of 33% ice to a cooled concentrate mix and subsequent size reduction of the ice using a crushing pump with gap sizes from 1 to 3mm. The product is extruded at -6°C, then blast frozen (-35°C for 2hours) and subsequently stored at -25°C. Before serving the product is tempered back to -18°C. It is found that the product at -18°C can be squeezed directly, by hand, from the pack (see photograph in Figure 3) which is of advantage to the consumer as it allows immediate consumption.

This can be compared with the control product which is frozen directly from the ice cream freezer and has no subsequently post-added ice. After equivalent hardening, storage and tempering it is found that the product at -18°C is very hard and cannot be squeezed directly from the pack without significant warming or kneading of the product surface through the pack.

Example 4 - Spoonable Sorbets

This set of examples describes spoonable sorbet ice products according to the invention that are made with by adding Ziegra ice to a concentrated mix frozen through a standard ice cream freezer (Crepaco W04), the combination then being subjected to ice particle size reduction as described above.

The addition of added particulate ice can also be used to make sorbet formulations softer without using the addition of extra sugars.

Ingredients	**Concentrate Mix 1**	**Fruit Ice 1**	**Concentrate Mix 2**	**Fruit Ice 2**
Water	30.1	18	0.0	0.0

Raspberry Puree 20Brix (31.3% solids)	20.8	12.5	30.0	19.5
Strawberry Puree (11% solids)	20.8	12.5	30.0	19.5
Low Fructose Corn Syrup (78% solids)	9.2	5.5	11.0	7.15
Dextrose monohydrate	13.3	8.0	20	13
Sucrose	5.8	3.5	9.0	5.85
Total solids	33.9	20.4	48.5	31.5
Added ice %	------	40	------	35
Overrun %	60	60	5	5
Total ice at –18°C	------	68	------	51
Proportion of added ice %	------	59	------	68
Gap size of Crushing Pump (mm)	------	1.0, 3.0	------	1.0, 3.0

These sorbets made through a standard ice cream freezer without post–added particulate ice would have a very hard texture and would not be spoonable directly at -18°C. By use of the post addition of ice particulates these sorbets have a softer and more flowable texture that allows the product to be spoonable directly from the tub at -18°C. The softer sorbet texture will also help improve the fruit flavour delivery upon consumption therefore giving the consumer an improved sensory experience.

It is also possible to combine the addition of the fruit and the ice by the addition of frozen fruit directly into the frozen concentrate which can then also be size reduced by the crushing pump. This gives the advantage of maintaining fruit flavour through the reduced heat processing of the fruit ingredients i.e. addition of frozen fruit directly eliminates the need to thaw and hot mix.

Example 5 – Frozen drinkable products

By the use of this technology products can be made that are distributed at colder than -18°C and then, by tempering back to -10°C, the products become drinkable.

Ingredient	Lemon-Lime Concentrate	Lemon-Lime Product	Smoothie Concentrate	Smoothie Product
Dextrose monohydrate	21.5	14	16.05	10.43
Low fructose corn syrup (78% solids)	21.5	14	32.85	21.35
Xanthan gum	0.2	0.13	----	----
Iota Carrageenan	----	----	0.15	0.1
Guar gum	----	----	0.08	0.05
Monoglyceride emulsifier	----	----	0.22	0.14
Citric acid	0.77	0.5	0.12	0.08
Malic acid	0.23	0.15	----	----
Lemon Lime flavour	0.15	0.1	----	----
Strawberry Puree (11% solids)	----	----	21.54	14
Strawberry flavour	----	----	0.12	0.08
Skimmed milk powder	----	----	1.83	1.19
Whey powder	----	----	1.83	1.19
Coconut oil	----	----	1.18	0.77
Yoghurt (14% solids)	----	----	12.92	8.4
Beetroot red colour	----	----	0.11	0.07
Total solids	37.5	24.5	50.0	32.5
Water	55.65	36.12	11.0	7.15
Added ice %	----	35	----	35
Overrun %	10	109	30	30

Total ice at –18°C (%)	----	60	----	50
Proportion of added ice %	----	58	----	70
Gap size of crushing pump (mm)	----	2	----	2

Without the inclusion of particulate ice these systems would be very hard and would require high levels of sugar to make them drinkable at -10°C but this would then also make them intensely sweet. These examples are suckable up a straw at -10°C and do not require high sugar levels to make them so. For the consumer this allows the delivery of a product that is directly consumable as a drink containing ice at -10°C. The larger ice particles remain in the drink to provide the consumer with a novel and refreshing ice sensation.

Example 6 - Frozen Sauces

Formulations

Tomato Sauce (Pilot plant & lab scale)

Ingredient	**Concentrate**	**Product 50/50**	**Product 25/75**
Tomato Paste (30Brix, 26% solids)	87	43.5	65.25
Olive Oil	8	4	6
Salt	5	2.5	3.75
Total solids	36	18	27
Added Ice %	0	50	25
Total ice at –18°C (%)	-----	71.9	57.9
Proportion of added ice %	-----	69.5	43.2
Gap size of crushing pump (mm)	-----	0.7 to 1.5	0.7 to 1.5

Sweet 'n' Sour (Lab Scale)

Ingredient	Concentrate	Product 50/50	Product 25/75
Vinegar (1.7% solids)	16.7	8.35	12.525
Soy Sauce (19.8% solids)	13.3	6.65	9.975
Glucose Syrup 63DE (83% solids)	36.7	18.35	27.525
Sugar	3.3	1.65	2.475
Cornflour	5	2.5	3.75
Tomato Puree (18% solids)	10	5	7.5
Chicken stock (Concentrate 1:Water 3) 23% solids	10	5	7.5
Water	5	2.5	3.75
Total solids	45.8	22.9	34.4
Added Ice %	0	50	25
Total ice at –18°C (%)	-----	63.1	44.7
Proportion of added ice %	-----	79.2	55.9
Gap size of crushing pump (mm)	-----	0.7 to 1.5	0.7 to 1.5

All ingredients were added together and mixed for Tomato Sauce. For the Sweet 'n' Sour the cornflour was pre-hydrated in hot chicken stock before addition to the rest of the mix. The concentrate(s) were then cooled to –6°C.

For lab scale tests, ice obtained from an ice machine was blast frozen then ground into finer particles using a commitrol. The ice was then sieved through sieves in the foster box at –4°C to produce ice particle sizes ranging from >0.7mm but less than < 1.5mm. For pilot plant tests, ice was obtained from a Ziegra machine as described in Example 1.

The sieved ice was added to the cooled concentrate in a weight ratio of 50:50 or 25:75 concentrate to sieved ice. For the control, water chilled to 0°C was added and the product frozen quiescently. Products were stored at -18°C.

Hardness Results

	Control		Example 6	
	Average Hardness (MPa)	Std Dev	Average Hardness (MPa)	Std Dev
Tomato (Pilot* Plant)	4.3	0.57	0.99	0.11
Tomato 50:50	4.8	0.44	0.55	0.07
Tomato 25:75	19.34	5.9	1.3	0.38
Sweet 'N' Sour 50:50	4.4	0.69	0.12	0.04
Sweet 'N' Sour 25:75	21.12	4.7	0.61	0.12

*Pilot plant sample was made using Ziegra process and estimated to have a slightly lower ratio of added ice approx. $45_{ice}:55_{concentrate}$.

It is clear from these results that the process of the invention results in a significant reduction in product hardness in the order of from about 4-fold to 15-fold. All products have a Vickers hardness of less than 1.5.

The various features and embodiments of the present invention, referred to in individual sections above apply, as appropriate, to other sections, *mutatis mutandis*. Consequently features specified in one section may be combined with features specified in other sections, as appropriate. Various modifications and variations of the described methods and products of the

invention will be apparent to those skilled in the art without departing from the scope of the invention. Although the invention has been described in connection with specific preferred embodiments, it should be understood that the invention as claimed should not be unduly limited to such specific embodiments. Indeed, various modifications of the described modes for carrying out the invention which are apparent to those skilled in the relevant fields are intended to be within the scope of the following claims.

CLAIMS

1. A method of producing an ice-containing product which method comprises in the following order:

(i) cooling a product concentrate to a temperature of below -8°C;

(ii) combining the cooled concentrate with frozen particles, a substantial proportion of which have a particle size of greater than 5 mm; and

(iii) mechanically reducing the size of the frozen particles such that substantially all of the resulting frozen particles have a size of greater than 1 mm and less than 5 mm.

2. A method according to claim 1 wherein the concentrate is an ice confection concentrate.

3. A method according to claim 2 wherein the concentrate is a frozen confectionery premix concentrate.

4. A method according to claim 1 wherein the ice-containing product is selected from ice cream and water ice.

5. A method according to claim 1 wherein the concentrate is a milk shake concentrate.

6. A method according to claim 1 wherein the ice-containing product is a frozen sauce.

7. A method according to any one of claims 1 to 6 which further comprises a step (iv) of lowering the temperature of the product obtained in step (iii) to a temperature of -18°C or lower.

8. A method according to claim 7 which further comprises a step (v) of adding an aqueous liquid to the product obtained in step (iii) or step (iv).

9. A method according to any one of claims 1 to 8 where the amount of frozen particles added in step (ii) is from 22 wt% to 70 wt% of the final product.

Fig.1A.

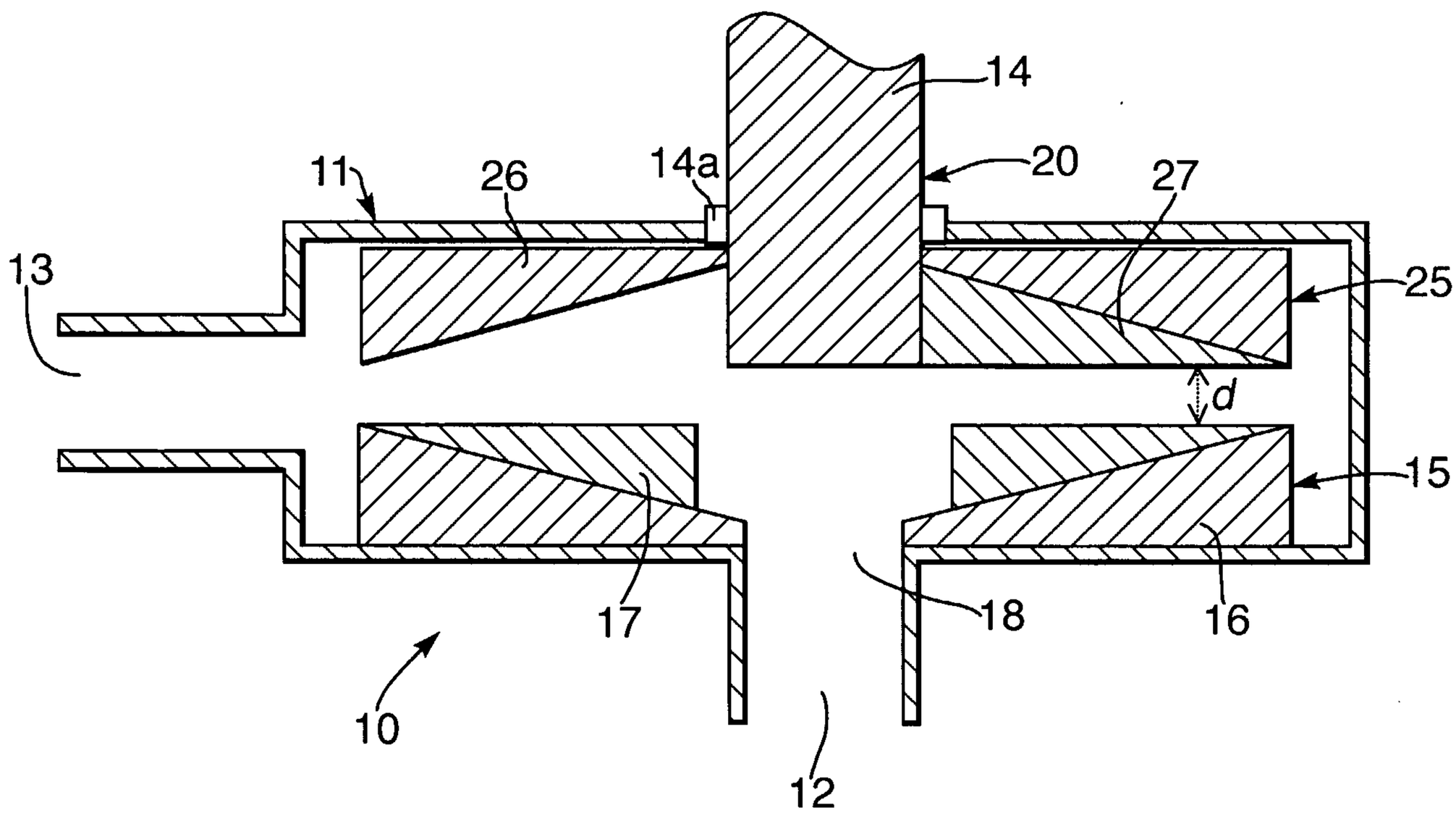

Fig.1B.

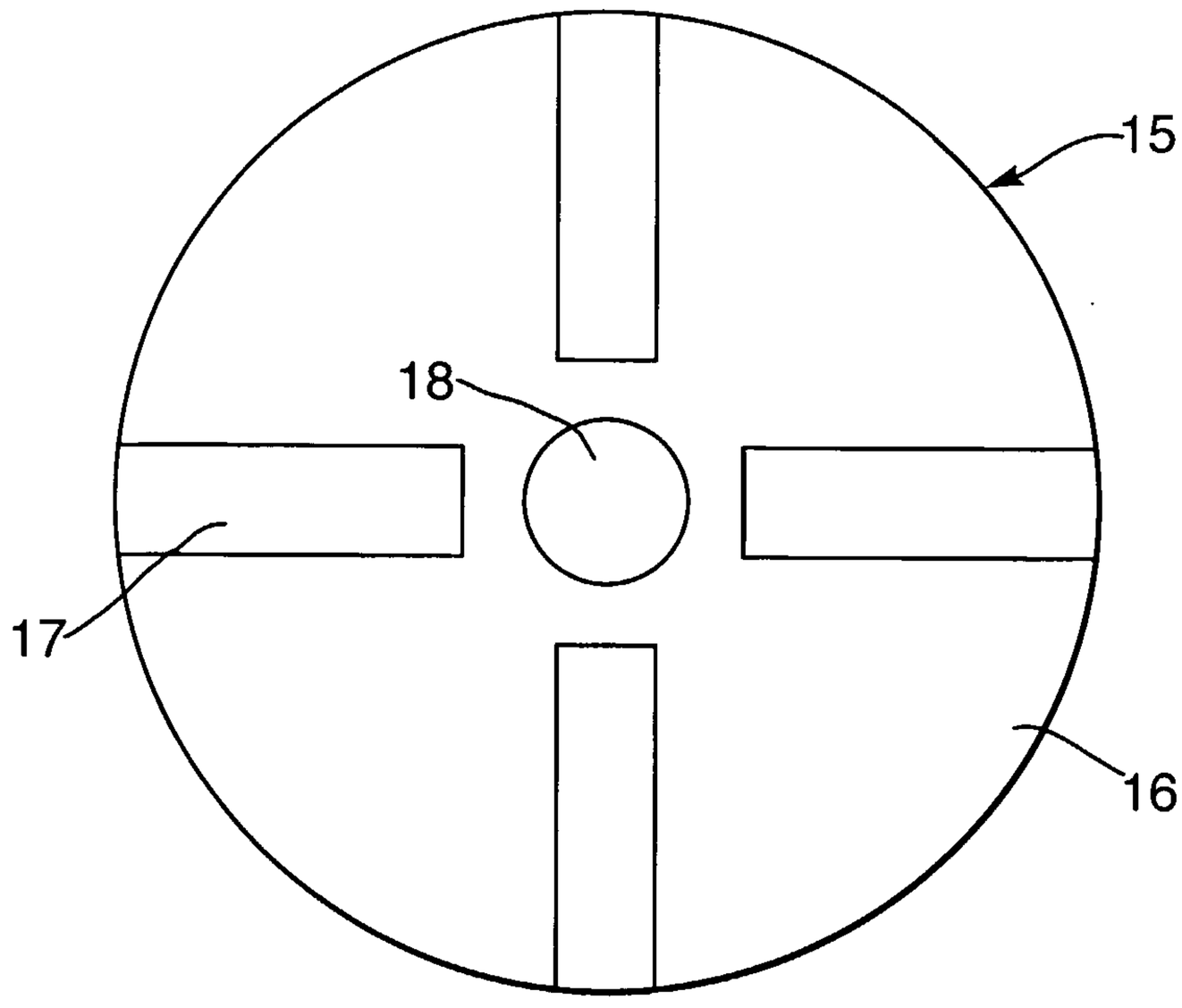

Fig.1C.

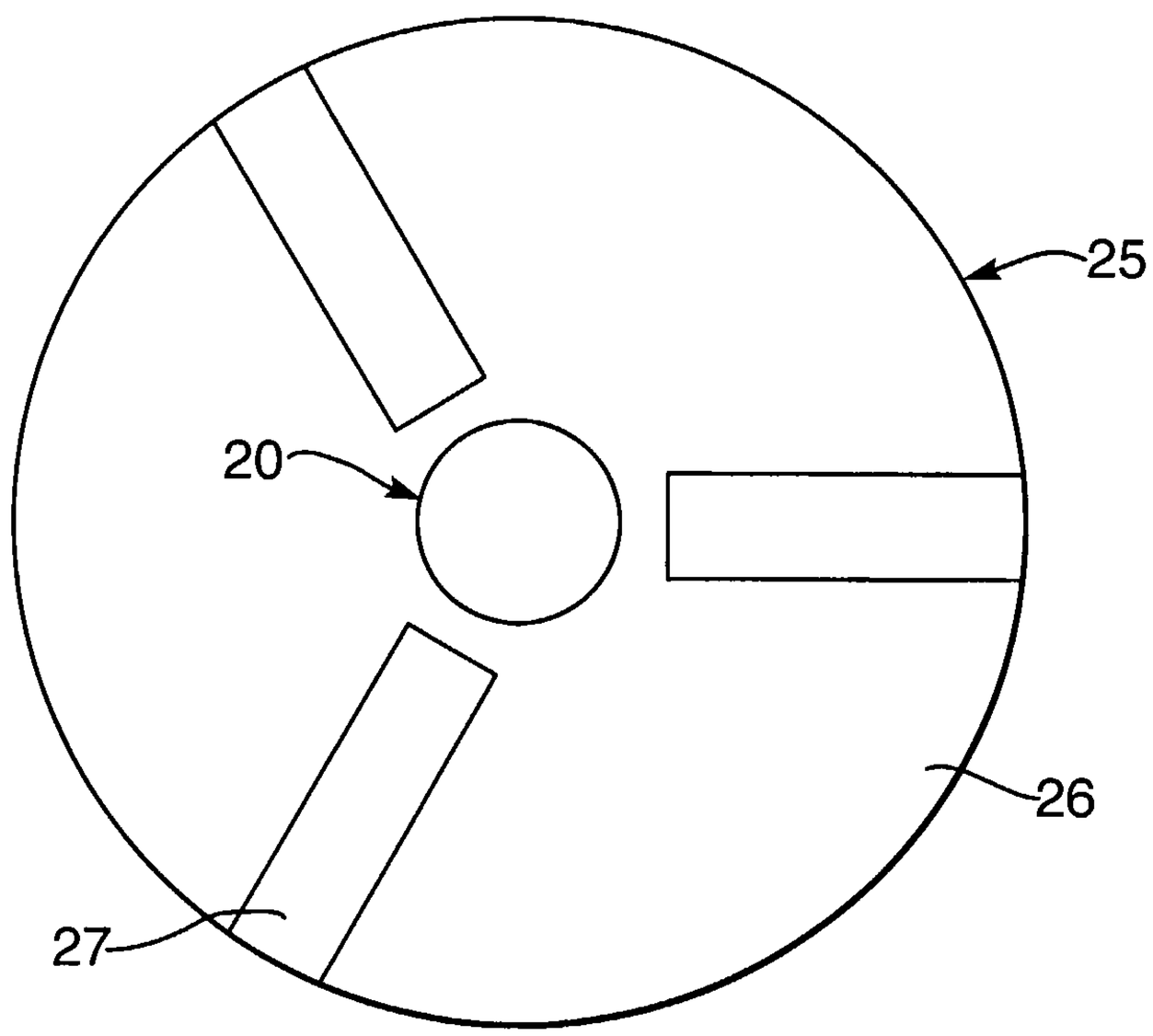

Fig.2.

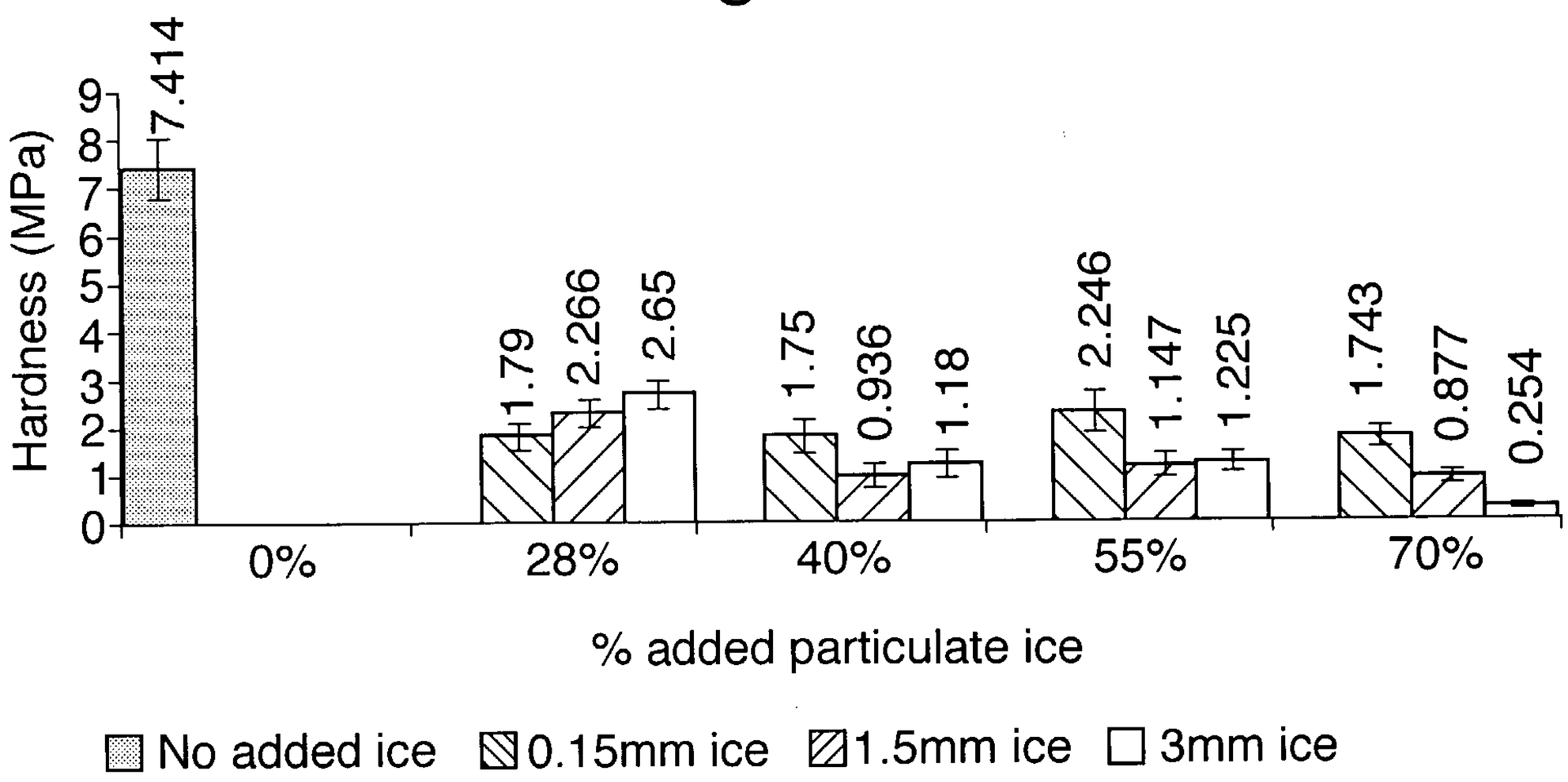
Hardness (MPa)
0
1
2
3
4
5
6
7
8
9
7.414
1.79
2.266
2.65
1.75
0.936
1.18
2.246
1.147
1.225
1.743
0.877
0.254
0%
28%
40%
55%
70%
% added particulate ice
No added ice
0.15mm ice
1.5mm ice
3mm ice
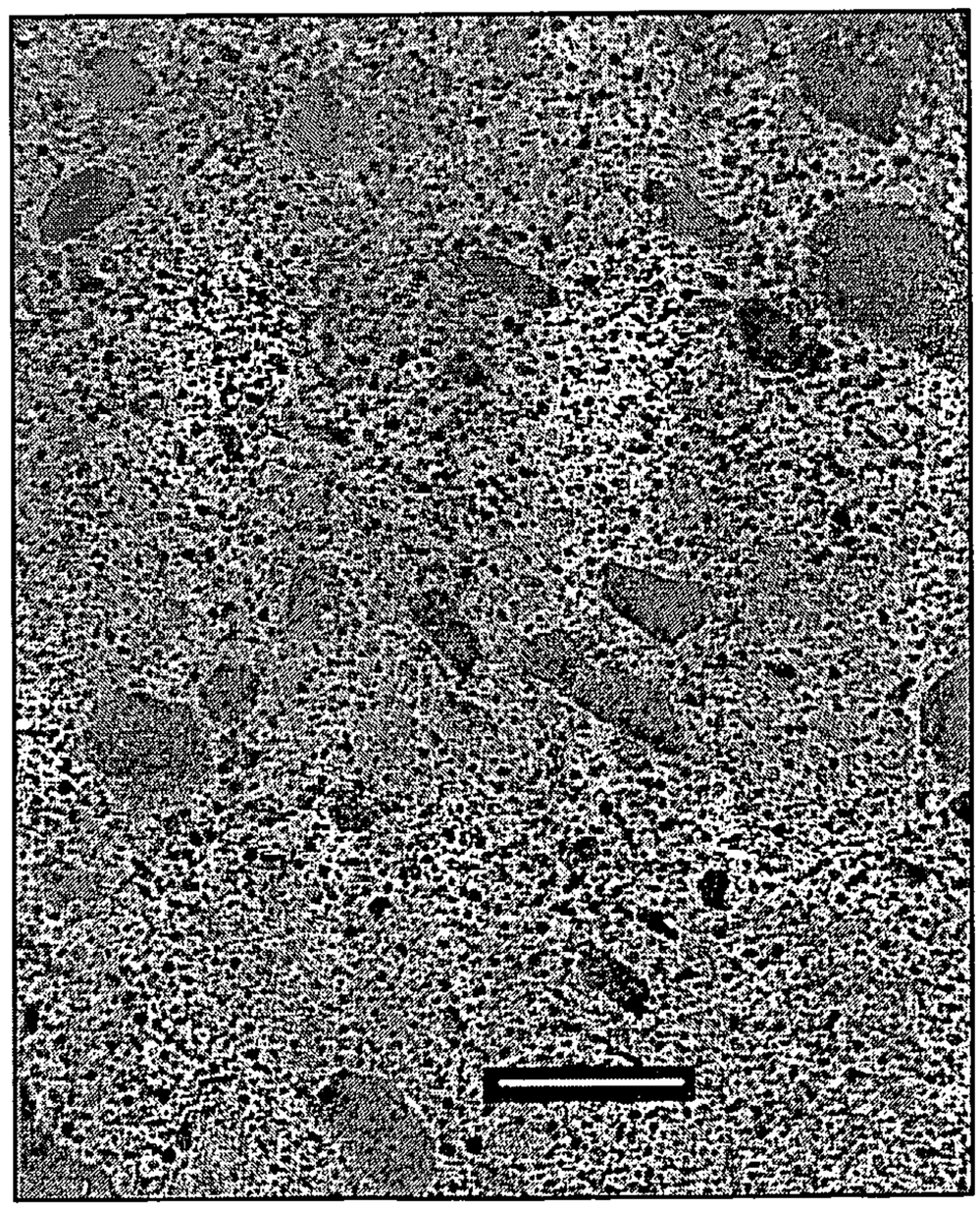
Fig.3.