May 5, 1970 A. J. WILD 3,509,691

EQUIPMENT FOR PACKING ARTICLES IN CARTONS OR THE LIKE

Filed April 18, 1967 4 Sheets-Sheet 1

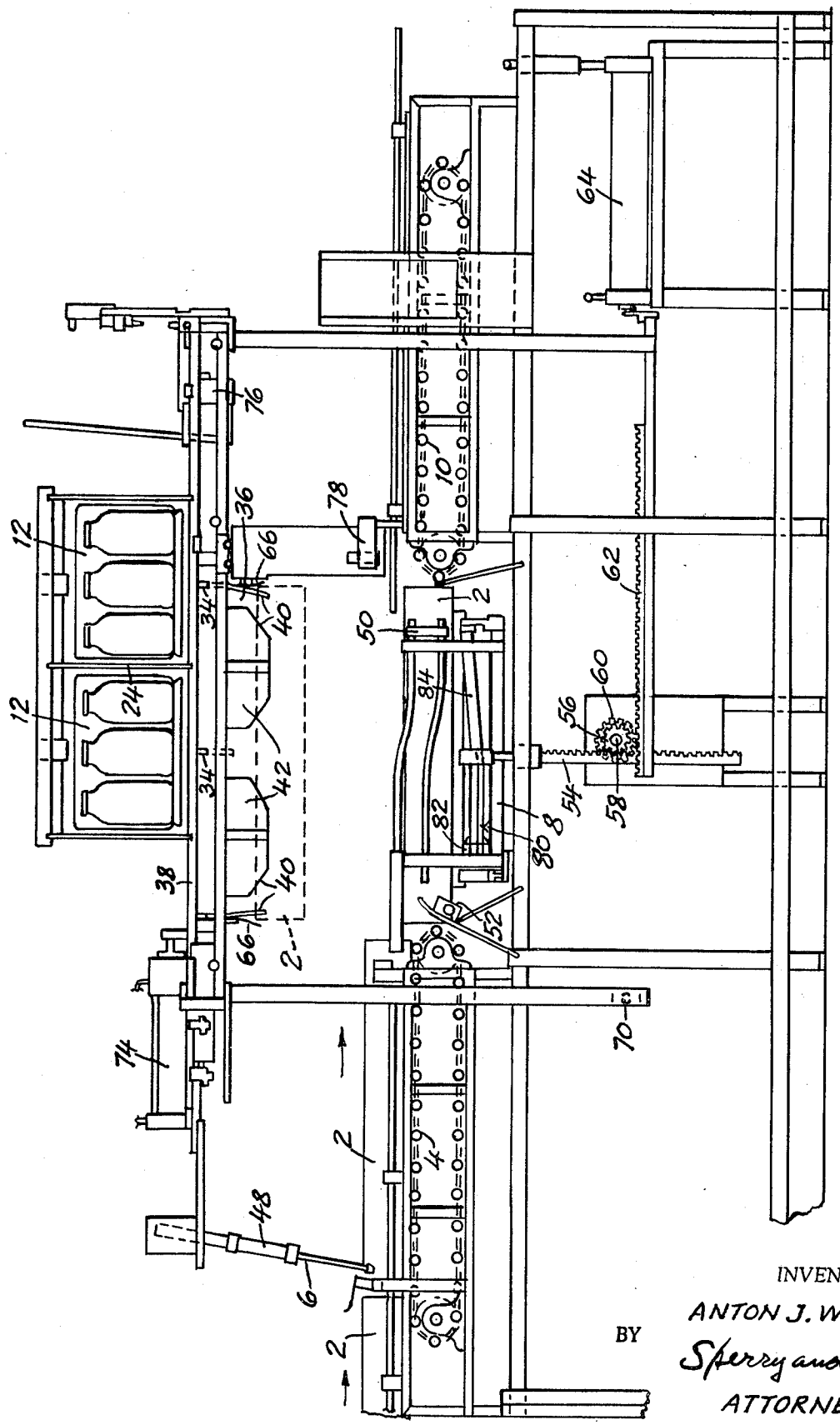

Fig. 1.

INVENTOR.
ANTON J. WILD
BY Sperry and Zoda
ATTORNEYS

May 5, 1970 A. J. WILD 3,509,691

EQUIPMENT FOR PACKING ARTICLES IN CARTONS OR THE LIKE

Filed April 18, 1967 4 Sheets-Sheet 2

Fig. 2.

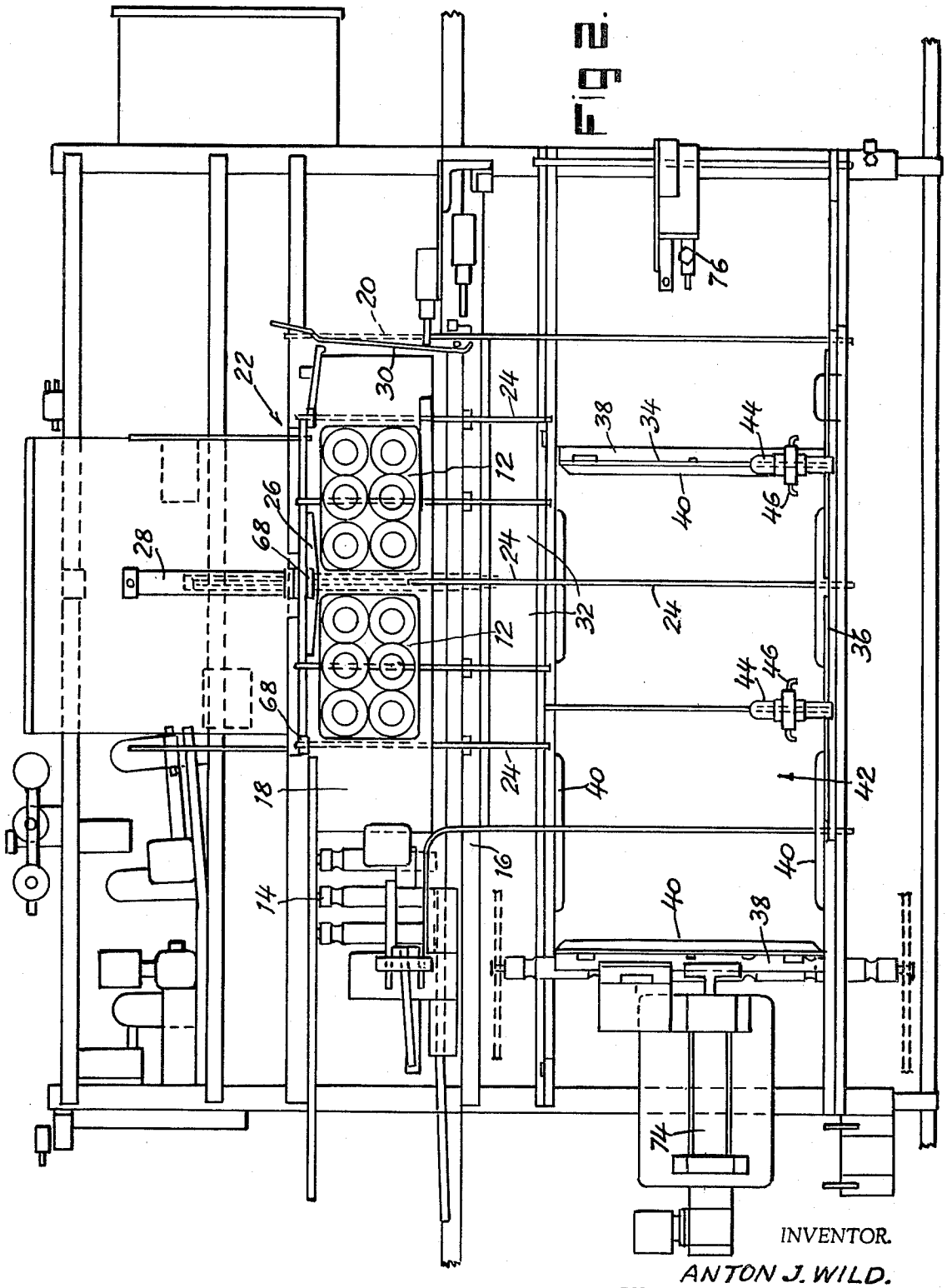

INVENTOR.
ANTON J. WILD.
BY Sperry and Zoda
ATTORNEYS

May 5, 1970 A. J. WILD 3,509,691

EQUIPMENT FOR PACKING ARTICLES IN CARTONS OR THE LIKE

Filed April 18, 1967 4 Sheets-Sheet 3

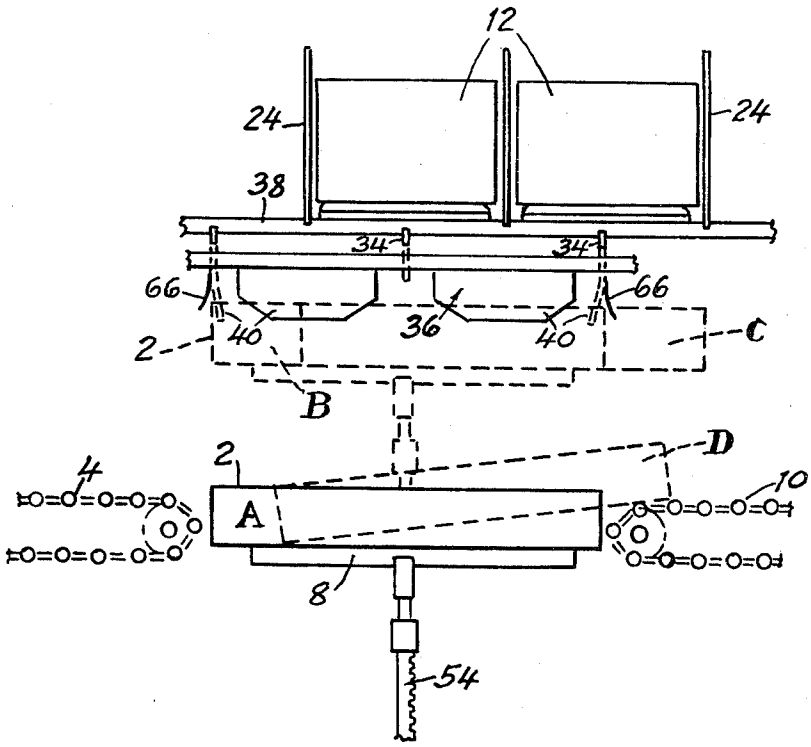

Fig. 3.

INVENTOR.
ANTON J. WILD
BY Sperry and Zodda
ATTORNEYS

May 5, 1970 A. J. WILD 3,509,691

EQUIPMENT FOR PACKING ARTICLES IN CARTONS OR THE LIKE

Filed April 18, 1967 4 Sheets-Sheet 4

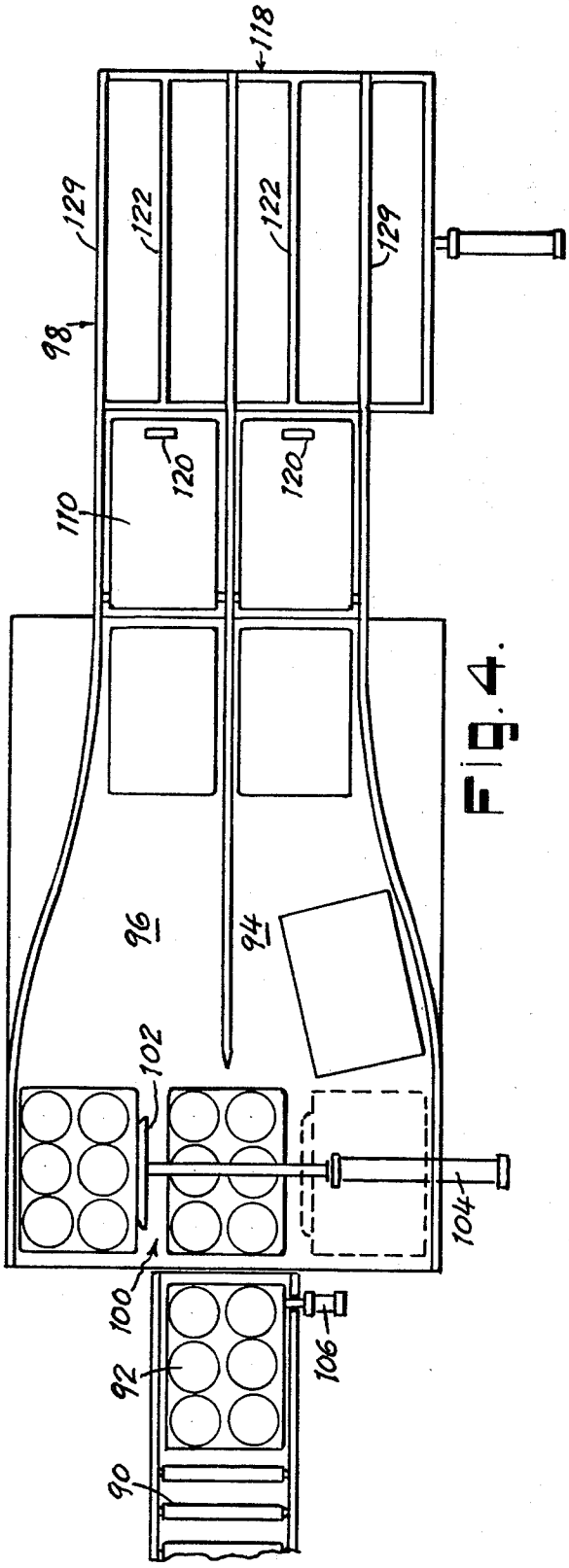

Fig. 4.

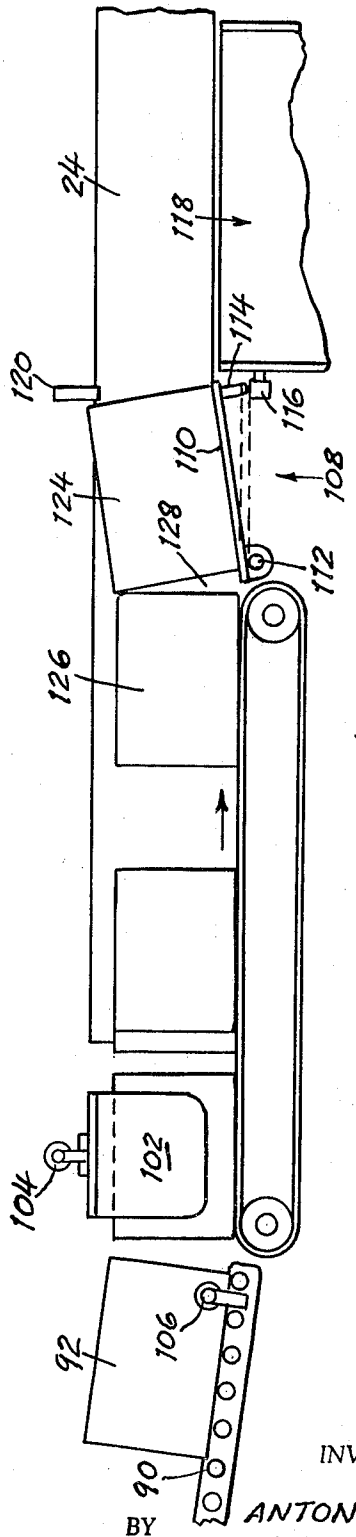

Fig. 5.

INVENTOR.
ANTON J. WILD

BY Sperry and Zoda
ATTORNEYS

United States Patent Office

3,509,691
Patented May 5, 1970

3,509,691

EQUIPMENT FOR PACKING ARTICLES IN CARTONS OR THE LIKE

Anton J. Wild, 968 Bonnell Court, Union, N.J. 07083

Filed Apr. 18, 1967, Ser. No. 631,756
Int. Cl. B65b 5/06, 39/14, 35/32
U.S. Cl. 53—247 12 Claims

ABSTRACT OF THE DISCLOSURE

Equipment for packing bottles, cans or other articles or packages in a case wherein the equipment is provided with a packing head having channels in which the articles to be packed are positioned in a predetermined arrangement. A packer grid is located beneath the packing head and is movable transversely of the packing head from a position displaced with respect to the head to an article discharging and guiding position in alignment with the head. The packer grid has article supporting means thereon which are located beneath the channels in the head when the grid is displaced with respect to the head but are movable with the grid transversely of the channels to release the articles from movement downward through the grid when the grid is moved to its article discharging and guiding position. The equipment further has means for moving a case to be filled into registration with the packer grid and the case thereafter is held in registration with the packer grid and movable therewith until after the articles have passed from the channels in the packing head through the packer grid into the case.

RELATED APPLICATION

This application is directed to equipment generally similar to that of applicant's copending application Ser. No. 438,244 filed Mar. 9, 1965, now Patent No. 3,325,967 issued June 20, 1967 and various features of said copending application may be embodied in the equipment of the present application.

BACKGROUND OF THE INVENTION

Field of invention

The invention relates to equipment for arranging and depositing articles, such as bottles, cans or packages in a predetermined arrangement in a case, carton or other receptacle. In particular, the invention relates to packing equipment wherein the articles or packages to be packed in a carton, are arranged in predetermined positions on article supporting means which are movable from beneath the arranged articles to allow the articles to move downward by gravity into a case or carton located beneath the article supporting means.

Description of the prior art

It has been usual practice heretofore to provide article packing equipment with a packing head having channel forming dividers between which articles are fed into predetermined positions corresponding to the positions in which they are to be arranged in a case or carton. Article supporting means are located beneath the packer head in position to support the articles fed into the channels between the dividers, and a packer grid is located beneath the article supporting means to receive and guide articles moving downward under the action of gravity from the packer head to the case or carton located beneath the packer grid.

In some equipment, the channel forming dividers of the packing head are moved transversely of the article supporting means to move the articles off the supporting means and into alignment with guide means of the packer

grid for movement downward into the cells of a case or carton positioned beneath the packer grid. Typical constructions of this type are disclosed in U.S. Patent Nos. 2,686,623 and 3,057,136.

In other equipment of the prior art, both the channel forming dividers in the packer head and the article guiding passages in a packer grid are held in fixed and aligned positions. A separate article supporting device is then located between the packer head and packing grid and is positioned beneath the channels for movement transversely of the channels to allow the articles in the channels to move downward into a case positioned beneath the packer grid. Typical constructions of the latter type are disclosed in U.S. Patents Nos. 2,701,085; 2,727,664; 2,753,673 and 3,052,071.

Both of the foregoing types of packing equipment embody relatively complicated constructions and involve operations wherein the articles or carton or both may be displaced, or elements of the assembly may be misaligned so that the articles tend to become jammed in the equipment, or the articles or the labels thereon may be damaged as the articles move downward from the packing head to the case.

SUMMARY OF THE INVENTION

In accordance with the present invention, a relatively simple type of packing equipment is provided wherein the packer grid and the article supporting means are combined to form a untary assembly and this assembly as a whole is moved into and out of article supporting and article releasing and guiding positions. Furthermore, the case, carton or container in which the articles are to be packed is brought into registry with the packer grid assembly and thereafter is moved with the assembly to an article receiving position. In this way, the danger of misalignment of the article supporting members, packer grid and carton is eliminated and displacement or injury to the articles, or to the labels thereon, is prevented.

BRIEF DESCRIPTION OF THE DRAWING

FIG. 1 is a side elevation of a typical form of equipment embodying the present invention;

FIG. 2 is a top plan view of that form of the invention shown in FIG. 1;

FIG. 3 is a diagrammatic view of a portion of the elements illustrated in FIGS. 1 and 2 showing various positions to which the case and packer grid assembly may be moved;

FIG. 4 is a top plan view of an alternative form of equipment embodying the present invention; and

FIG. 5 is a side elevation of the construction shown in FIG. 4.

DESCRIPTION OF THE PREFERRED EMBODIMENT

In that form of the invention chosen for purposes of illustration in FIGS. 1 to 3 of the drawings, the empty cases **2** to be filled are supported on a case supplying conveyor **4** by which they are moved to the right as seen in FIG. 1 until the rear end of the foremost case on the conveyor is engaged by a stop member **6**. The front end of the empty case will then be positioned near the right-hand end of the conveyor **4**, as seen in FIG. 1, adjacent to a vertically movable table **8**. A case discharging conveyor **10** is located on the opposite side of the table **8**. However, the table **8**, when in its lowered, case-receiving position, as shown in full lines in FIG. 1, is located below the upper runs of the conveyors **4** and **10** so that when a case is released by the stop number **6**, it will be advanced onto the table **8** by the conveyor **4** and will drop into position on the table **8** where it is held between the conveyors **4** and **10** as shown in full lines as position A of FIG. 3.

While the equipment may be designed to pack bottles, cans or the like in a case, the construction illustrated in FIGS. 1 to 3 is particularly adapted for packing "6-packs," 8-packs, or other articles or packages **12** in the cases **2**. For this purpose, the "6-packs" are supplied to the equipment by means of a package conveyor **14** mounted on a horizontal frame member **16** located above and at one side of the table **8** as shown in FIG. 2. A platform **18** is aligned with the conveyor **14** and provided with a package stop **20** so that a predetermined number of packages **12**, such as 6-packs, 8-packs, or the like may be pushed onto the platform **18** and along the same until they engage the package stop **20**. In a typical operation, and as shown in FIGS. 1 and 2, the stop member **20** is positioned to permit two 6-packs to be located on the platform **18**.

A packing head **22** is located adjacent the platform **18** and is provided with spaced, parallel, channel forming dividers **24** designed to receive and arrange the packages **12** in predetermined positions corresponding to those in which the packages or articles are to be arranged within the case **2**.

A traversely movable pusher **26** is located at one side of the platform **18** and packing head **22** and in actuated by suitable means such as an air cylinder **28** in response to sensing elements or feelers **30**. The pusher **26** thus is operable when two, or a predetermined number, of 6-packs or packages are advanced onto the platform **18** to push the packages off the platform and into the channels **32** between the channel forming dividers **24** of packing head **22**. The packages thus moved from platform **18** to the packer head **22** rest upon supporting means in the form of wearing strips **34** carried by a packer grid **36** located beneath the packer head. Thereafter, the pusher **26** is withdrawn by air cylinder **28** to clear the platform **18** and allow additional packages to be advanced by the packer conveyor **14** into positions on the platform and in front of the pusher **26**.

The packer grid **36** with its article supporting strips **34** forms a unitary assembly positioned above the table **8**. The table **8** is offset or displaced laterally with respect to the packing head **22** as shown in FIGS. 1 and 3 and the packing grid **36** is movable transversely of the channels **32** in the packer head from an article supporting position shown in full lines in FIGURES 1 and 2 and at B in FIG. 3, to an article discharging and guiding position in alignment with the packaging head and as indicated at C in FIG. 3.

The grid embodies a rectangular frame **38** of a size comparable to the size of the cases to be filled with the 6-packs or packages and the article supporting strips **34** are mounted on the frame and located at the right hand end of packer grid **36** and at the center of the grid midway between the opposite ends of the frame **38**. The article supporting strips **34** extend parallel to the channels **32** of the packer head and when the packer grid is in the position shown in full lines in FIGS. 1 and 2 the article supporting strips are located beneath the channels in position to support articles moved through the channels by the pusher **26**. Article guiding fingers **40** are secured to the frame **38** and cooperate with the article supporting members **34** to define vertical article guiding passages **42** through which the articles to be packed are movable under the action of gravity into a case located on the table **8** in the position C of FIG. 3 upon movement of the packing grid and case to the article discharging and guiding position in alignment with the packing head **22**.

Feeler elements **44** are carried by the packer grid **36** and are connected in series by air or electric lines **46** so as to be operable upon transfer of a full complement of packages or articles onto the article supporting strips **34** of the packer grid **36** to control the stop member **6** which serves to hold the foremost empty case **2** on the case supplying conveyor **4**. Therefore, when a full complement of packages, or articles to be packed, are moved into position on the article supporting strips **34** of the packer grid, the stop member **6** is retracted by an air cylinder **48** or the like and as a result, the foremost empty case is released for movement forward onto the table **8**. The case then drops in position A of FIG. 3 between the ends of the case supplying conveyor **4** and the case discharging conveyor **10** at opposite sides of the table **8** and engages a switch **50** located adjacent the table **8**. The switch **50** when closed serves to complete an electrical circuit to actuate the air cylinder **48** to cause the stop member **6** to move downward to the full line position of FIG. 1 wherein it will hold a following empty case **2** in position on the conveyor **4** and prevent it from interfering with the movement of the table **8** and the case which has been deposited thereon.

A control device **52** is located near the end of the case supplying conveyor **4** so that when the empty case drops off the end of conveyor **4** onto the table **8**, the control device is actuated to energize suitable means for raising the table **8**. For example, the table **8** may be secured to the upper end of a rack **54** engaged by a pinion **56** fixed to a rotatable shaft **58**. A second pinion **60** is secured to the shaft **58** and engages a rack **62** movable horizontally by an air cylinder or other suitable means **64**. Accordingly, when an empty case drops into position on the table **8**, the table and case will be raised from the full line position of FIG. 1 to the dotted line position thereof and to the position indicated at "B" in FIG. 3. When in this raised position, the empty case **2** is located directly below the packer grid **36** and in registry therewith and the article guiding fingers **40** of the packer grid projecting into the case and any cells or compartments provided in the case. However, the empty case supported on the table **8** in the position B of FIG. 3 is displaced or offset laterally with respect to the packing head **22** and the articles arranged in the channels **32** thereof. The outer frame **38** of the packer grid **36** preferably is provided with downwardly extending case positioning and moving members **66** engageable with the outer sides and ends of the empty case **2** on the table **8** to assure accurate location and registration of the case with respect to the offset packer grid **38** and the article guiding fingers **40** thereof when the table **8** is raised.

A contact element or other device **70** is positioned to be engaged by the horizontally movable rack **62** when the table **8** has been raised into place beneath the packer grid. The device **70** serves to actuate an air cylinder **74** or the like to move the packer grid **36** with its article supporting strips **34** to the right as seen in FIGS. 1 and 2. In so moving, the case positioning members **66** on the frame **38** of the packer grid **36** serve to move the empty case **2** to the right with the packer grid, and with respect to the raised table **8**. The case will thus be shifted horizontally with the packer grid to the dotted line position "C" of FIG. 3 wherein one end of the case **2** projects beyond the end of table **8** while the case itself is, of course, maintained accurately in position beneath the packer grid **38** and with respect to the article guiding fingers **40** which define the vertical passages **42**. When thus moved and positioned the empty case is brought into vertical alignment with the packing head **22**.

As pointed out above, and as shown in FIG. 3, the packer grid **36**, when in its initial full line position is located so that the supporting strips **34** of the grid are substantially centered with respect to the packages when the packages or articles are transferred from the platform **18** onto the supporting strips of the packer grid. However, when the grid **36** and empty case **2** are moved to the right to their article discharging and guiding position, as shown at "C" in FIG. 3, the article supporting strips **34** will be moved transversely of the channels **32** and from beneath the packages or articles in the channels so as to be located in vertical alignment with the channel forming dividers **24**. The packages will then no longer be supported but move downwardly under the action of gravity, through the vertical passages **42** into the case **2**.

The packer grid **36** preferably also is provided with upwardly projecting stop fingers **68** which are movable with the grid transversely of the channels **32** into positions which prevent additional articles or 6-packs from being moved toward the packer grid until the packer grid has been returned to its article supporting position. Such stop fingers may be similar in construction and operation to those illustrated and described in applicant's copending application, Ser. No. 438,244.

The grid **36**, on moving to the right to its package releasing position C, engages a switch **76** for actuating the air cylinder or means **64** to lower the table **8** and the now filled case to the position "D" of FIG. 3. However, since the filled case when lowered to the position "D" is displaced to the right with respect to the table **8**, the projecting end of the case will be caused to extend over and engage the adjacent end of the case discharging conveyor **10**. The case is thus moved successively from the position A to positions B, C and D in what may be termed an inverted U-shaped path. A contact element **78** is located so as to be engaged by the projecting end of the filled case as table **8** moved downward to the position D. This element serves to actuate a case advancing device **80** which, as shown includes a lug **82** positioned to engage the opposite or left-hand end of the filled case and an air cylinder **84** which moves the lug **82** and the filled case to the right. In this way, the filled case is positively discharged from the table **8** and boosted up onto the case discharging conveyor **10** for removal from the equipment or delivery to any desired point.

The switch **76** or other means engaged by the packer grid **36** near the end of its movement to the right-hand package discharging and guiding position also serves to actuate air cylinder **74** to return the packer grid and package supporting strips to the full line position at the left in FIG. 1 whereby the equipment is restored to its initial condition for performing a succeeding cycle of operations. In this way, the operation is rendered completely automatic and the movement of all of the elements is coordinated and timed to permit packages to be loaded into cases rapidly and with the accuracy required to prevent jamming, breakage or damage to either the articles being packed in cases or to the equipment itself.

It will also be apparent that the entire operation is caused to respond to the presence of both a full complement of packages and the presence of a case for receiving the packages. Therefore, the packages cannot be discharged until a case is properly positioned to receive the packages and no case will be loaded with an incomplete group or complement of packages.

The type of actuating and control means employed may, of course, be varied but it has been found in practice that the use of air cylinders for moving the various elements or members is of advantage in that the danger of injury to the equipment and to the cases and packages or articles being handled is thereby reduced. The use of rack and pinion means for raising and lowering the table and case are also of advantage particularly when displacing the case with respect to the table since the rack can be more accurately and firmly supported against lateral movement which might render the packing of hydraulic or pneumatic actuating means inoperable.

The alternative construction shown in plan view in FIG. 4 embodies a feed conveyor **90** which feeds packages or articles **92** in single file toward the two parallel channels **94** and **96** leading to a package head **98**. A shifting device **100** is located adjacent the entrance to the channels **94** and **96** and includes a plate **102** movable back and forth transversely of the feed conveyor **90** by an air cylinder or the like **104**. The air cylinder is actuated by a feeder device **106** engageable by the foremost article or package on the feed conveyor **90** so that the articles will be alternately moved off the feed conveyor **90** first into alignment with the channel **94** and then into alignment with the channel **96** to supply articles to each channel.

Further as shown in FIG. 5 the channels **94** and **96** are each provided with holding means **108** which prevent crowding or jamming of the articles in the channels. The holding means illustrated include a plate **110** pivoted at **112** for movement to an inclined position under the action of a cam **114** engageable with a roller **116** mounted on the frame of the packer grid **118** upon transverse movement of the packer grid with respect to the channels **94** and **96**. A stop member **120** is located above the articles moving through the channels **94** and **96** in position to be engaged by an article which has been titlted upward by the plate **110** whereby the articles in the channels are held against forward movement when the packer grid is in its article discharging and guiding position. However, when the packer grid moves back into its article supporting position the roller **116** will move out from beneath the cam **114** so as to allow the plate **110** and the article engaging the stop number **120** to move downward to release the article for forward movement onto the article supporting strips **122** of the packer grid.

When the articles being packed in cases are 6-packs or the like the tiltable plate **110** serves a further function in that lower corner of the pack **124** supported on the plate **110** and inclined thereby is separated a short distance from the adjacent pack **126** as shown at **128** in FIG. 5. Thereafter when the plate **110** is lowered by movement of the packer grid into a package receiving position, the previously tilted package **124** will be spaced a short distance from the following package **126** so as to be freely movable on between the dividers **129** of the packing head **98** which extend over the packer grid **118**. In this way the 6-packs are suitably spaced and freed from jamming to assure proper positioning thereof on the article supporting strips **122** of the packer grid **118**.

The operation of the packer grid and other parts of the equipment may be effected as described in connection with FIGS. 1, 2 and 3, but the feed is arranged for "in-line" movement of the articles or packages to the packing head.

While the forms of the equipment shown in FIGS. 1 to 5 are discribed with particular reference to the packing of 6-packs or the like in cases, it will be apparent that the equipment is equally adapted for the packing of bottles, cans or other articles in cases. Thus the number of channels in the packing head to which articles are fed and in which they are arranged for packing can be increased as desired and when the two dozen bottles are to be packed in case, four channels of suitable length to receive six bottles in each channel above the packer grid, may be provided. The packer grid will then have four article supporting strips movable with the grid into and out of article supporting and article discharging and guiding positions. In the alternative, and as illustrated in applicant's copending application Ser. No. 438,244, the packing head may be provided with six channels and the packer grid may be formed with twenty-four article discharging and guiding passages with flexible strips for guiding and spacing the articles as they move downward from the packing head, through the packer grid, into a case positioned below and registering with the packer grid.

It will thus be apparent that equipment embodying the present invention may be varied considerably in form, construction, and the arrangement of the elements thereof to handle packages, bottles, cans or other articles and to deposit any desired number thereof in a predetermined arrangement in a case or container. In view thereof it should be understood that the particular embodiments of the invention shown in the drawings and described above are intended to be illustrative only and are not intended to limit the scope of the invention.

What is claimed is:

1. In packing equipment for depositing articles in a predetermined arrangement in a case, wherein there is a stationary packing head having a plurality of channel forming dividers therein defining channels in which articles may be positioned in said predetermined arrangement, the improvement comprising:

(1) a packer grid located below the packing head and provided with

(a) a frame for said packer grid having,

(b) article supporting members mounted on said frame in positions extending substantially parallel to said channels and presenting upper edges upon which articles in said channels may be supported,

(c) article guiding means carried by the packer grid and cooperating with the article supporting members to define vertically extending article guiding passages, and

(2) means connected to said packer grid for moving said packer grid with its article supporting members and article guiding means transversely of the channels in the packing head into and out of article supporting and article releasing positions.

2. Packing equipment as defined in claim 1 wherein:

(1) the frame of the packer grid and the article supporting members mounted thereon have article guiding fingers carried thereby and defining vertically extending article guiding passages through which articles are movable when said packer grid and article suppotring members are in said article releasing position.

3. Article packing equipment comprising a packing head having parallel article guiding channels therein for locating articles in a predetermined arrangement in said packing head, a frame located beneath said packing head and having article supporting means mounted in fixed positions thereon, article guiding means defining vertically extending article guiding passages and mounted on said frame and article supporting means, and means for moving said frame together with said article supporting means and article guiding means horizontally transversely of said channels from an article supporting position wherein said article supporting means are located in positions to be engaged by and to support articles arranged in said packing head and said vertically extending passages are offset laterally with respect to such articles, to an article discharging position wherein said article supporting means are removed from beneath articles arranged in the packing head and said vertically extending passages are located in vertical alignment with such articles.

4. Packaging equipment as defined in claim 1 wherein:

(1) a table is located beneath the packer grid for receiving an empty case in which the articles arranged in the packer head are to be deposited,

(2) means are connected to said table to move said table to raised and lowered positions with a case thereon, and

(3) means are provided for moving a case with the packer grid and with respect to said table to maintain the case in registry with the packer grid upon transverse movement of the packer grid with respect to the channels in the packing head to said article releasing position.

5. Packing equipment as defined in claim 4 wherein:

(a) the table is offset laterally with respect to the packing head and is vertically aligned with the packer grid when the packer grid and the article supporting means thereon are in said article supporting position.

6. Packaging equipment as defined in claim 4 having:

(a) means on the packer grid engagable with an empty case on said table to position and move said case with said packer grid and with respect to said table upon transverse movement of the packer grid with respect to the channels in the packing head to said article releasing position.

7. Packaging equipment as defined in claim 4 wherein:

(a) means are carried by the frame for the packer grid and extend downward from the frame into positions on the exterior of an empty case on the table to maintain said case in registry with the packer grid upon movement of the packer grid transversely with respect to the channels in the packing head.

8. Packing equipment as defined in claim 4 having:

(a) article guiding fingers project below the packer grid into position to enter a case on said table,

(b) said fingers being movable with the packer grid and case transversely of the channels in the packing head to guide articles from said channels into said case when said packer grid is moved to said article releasing position.

9. Packaging equipment as defined in claim 4 wherein:

(a) means are provided to successively move a case supported on said table upwardly with said table then horizontally with respect to said table and then downwardly with said table.

10. Packing equipment as defined in claim 4 wherein there are:

(a) means for feeding empty cases to said table when said table is in said lowered position, and

(b) means for removing filled cases from said table when said table and a filled case thereon are moved from a raised to a lowered position.

11. Packing equipment as defined in claim 4 wherein:

(a) one end of the case projects beyond an adjacent end of said table when said case is moved with respect to the table while the table is raised, and

(b) means for removing a filled case from the table are located below said projecting end of the case to receive and engage the filled case when said case is lowered with said table.

12. Article packing equipment as defined in claim 3 wherein a table for receiving a receptacle for articles arranged in the packing head is located below said frame and article guiding means, means are provided for raising said table and a receptacle thereon into position to bring such receptacle into registration with the article guiding means while said frame and article guiding means are in said article supporting position, means are provided for moving such receptacle horizontally with said article guiding means and with respect to said table when said frame and article guiding means are moved horizontally to said article discharging position, and means are provided for causing said table with the receptacle thereon to be moved downward away from said frame and article guiding means after said receptacle and frame have been moved horizontally to said article discharging position.

References Cited

UNITED STATES PATENTS

2,753,673	7/1956	Olive	53—247
2,890,553	6/1959	Day	53—166 X
2,921,425	1/1960	Seval	53—247
2,956,384	10/1960	Underwood	53—248 X
2,966,017	12/1960	Gallagher	53—166 X
3,046,712	7/1962	Carter	53—245 X
3,142,947	8/1964	Walter	53—166 X
3,142,948	8/1964	Arnett	53—246 X
3,218,780	11/1965	Kerr	53—245 X
3,271,928	9/1966	Wild	53—248
3,385,027	5/1968	Copping	53—248
3,425,186	2/1969	Hageline	53—247

WAYNE A. MORSE, JR., Primary Examiner

U.S. Cl. X.R.

53—166, 245, 248