(No Model.) 2 Sheets—Sheet 1.

W. VON SIEMENS.

APPARATUS FOR ELECTROLYTICALLY SEPARATING METALS FROM ORES.

No. 460,354. Patented Sept. 29, 1891.

Fig. 1.

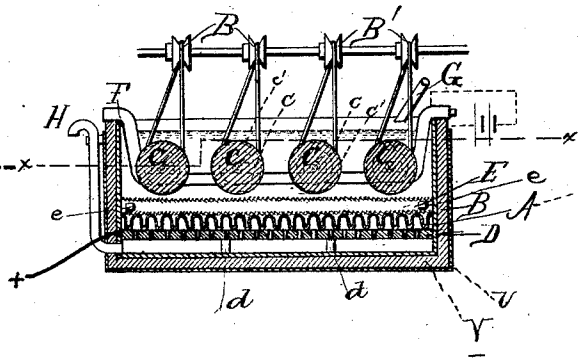

Fig. 2.

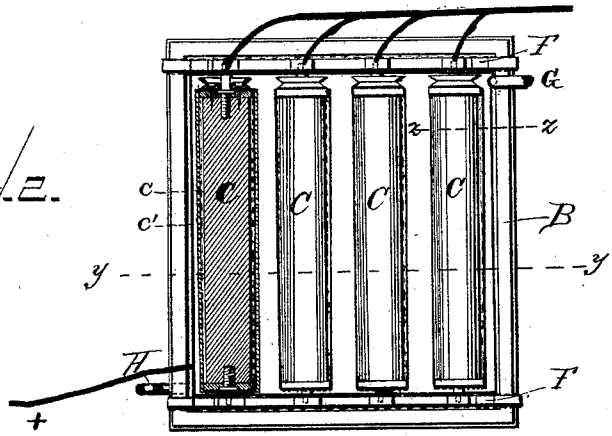

Fig. 9.

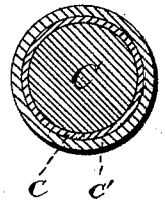

Fig 8

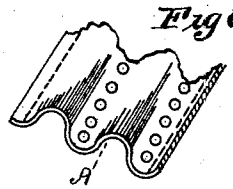

Fig. 3.

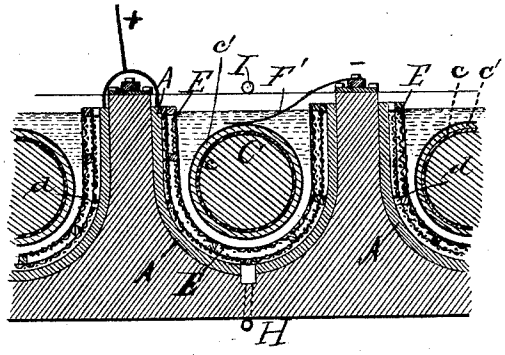

Fig. 10.

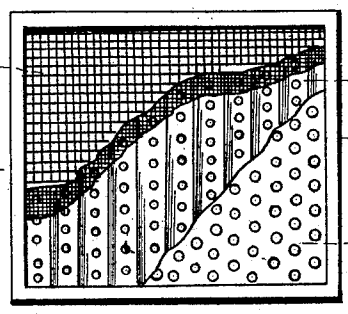

WITNESSES:
F. L. Ourand
W. A. Smith

INVENTOR
Werner von Siemens
BY Charles S. Whitman
his ATTORNEY

THE NORRIS PETERS CO., PHOTO-LITHO., WASHINGTON, D. C.

(No Model.) 2 Sheets—Sheet 2.

W. VON SIEMENS.

APPARATUS FOR ELECTROLYTICALLY SEPARATING METALS FROM ORES.

No. 460,354. Patented Sept. 29, 1891.

Fig. 4.

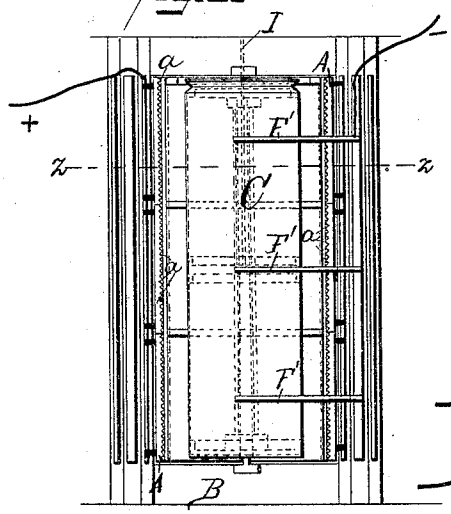

Fig. 5.

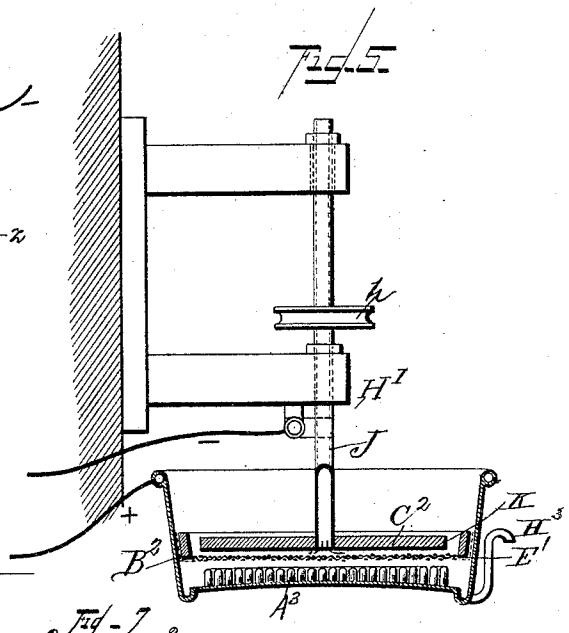

Fig. 6

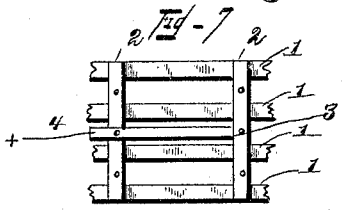

Fig. 7

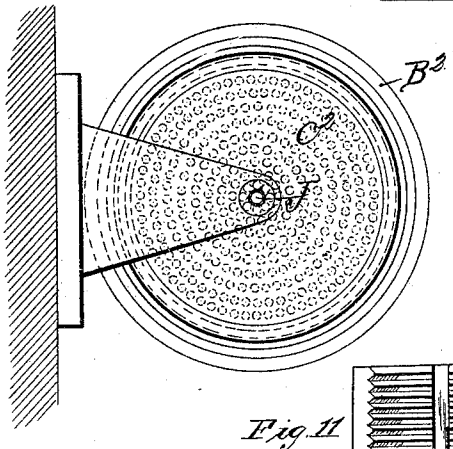

Fig. 11

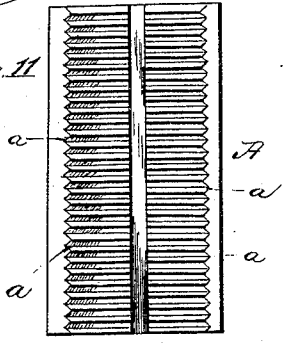

WITNESSES:
F. L. Ourand.
H. A. Smith

INVENTOR
Werner von Siemens
BY Charles S. Whitman,
HIS ATTORNEY.

THE NORRIS PETERS CO., PHOTO-LITHO., WASHINGTON, D. C.

UNITED STATES PATENT OFFICE.

WERNER VON SIEMENS, OF BERLIN, GERMANY, ASSIGNOR TO SIEMENS & HALSKE, OF SAME PLACE.

APPARATUS FOR ELECTROLYTICALLY SEPARATING METALS FROM ORES.

SPECIFICATION forming part of Letters Patent No. 460,354, dated September 29, 1891.

Application filed June 13, 1890. Serial No. 355,293. (No model.) Patented in Germany January 2, 1889, No. 48,959; in Spain April 10, 1889, No. 9,318; in Italy May 30, 1889, No. 25,017, and in Austria-Hungary October 11, 1890, No. 2,784 and No. 2,772.

To all whom it may concern:

Be it known that I, WERNER VON SIEMENS, a subject of the King of Prussia, German Emperor, residing at Berlin, in the Kingdom of Prussia, Germany, have invented new and useful Improvements in Apparatus for Electrolytically Separating Metals from Ores, (for which I have obtained a patent in Germany, No. 48,959, bearing date January 2, 1889; in Spain, No. 9,318, bearing date April 10, 1889; in Italy, No. 25,017, bearing date May 30, 1889; and in Austria-Hungary, Nos. 2,784 and 2,772, bearing date October 11, 1890,) of which the following is a specification.

My present invention relates to apparatus for carrying out the electrolytical process described and claimed in the Letters Patent of the United States No. 416,576, issued to me October 31, 1889, and especially to that part thereof in which the electrolytical deposition of a metal contained in the electrolyte is accomplished and the resulting solution rendered suitable for dissolving the salts of the same metal. In that patent a solution of a salt of the metal which it was desired to obtain and of a corresponding ferrous salt were submitted to the action of a vertical cathode-plate, whereby the desired metal was deposited and the resulting solution was then submitted to the action of an anode-plate of suitable material, whereby the ferrous salt was converted into a ferric salt, which possessed the above-named property of dissolving certain salts of the desired metal, and it is upon this process that this invention is also based; but in the said patent, as in other devices heretofore used for analogous purposes, the anode and cathode plates have been vertical and have been separated by diaphragms of sufficient density to prevent the passage of the solution surrounding the different plates, but which permit the passage of the electric current, and these diaphragms have possessed the well-known faults which are connected with all separating-diaphragms in electrolytic operations—viz., either the resistance thereof to the electric current has been too great, or if it has a suitable value the diaphragms are of no durability, and soon allow the mixing of the liquids which they should keep separated sometimes by diffusion and sometimes through direct leaks.

This invention therefore has for its object to obviate the use of such diaphragms, and for that purpose I use a suitable cathode-plate, around which the entering electrolyte containing a salt of the metal and a ferrous salt circulates, depositing its metal, and from which it passes through a screen to the anode-plate situated below the said cathode-plate, where its ferrous salts are converted in ferric ones, and where it escapes, the relative position of the plates enabling me to accomplish the above-mentioned object; and my invention also consists in certain improved constructions of the anode-plate, as will be hereinafter more fully described and claimed.

Referring to the accompanying drawings, in which corresponding parts are designated by similar letters and numerals, Figure 1 is a vertical cross-section of an electrolytical cell, made by the plane *y y*, Fig. 2, constructed according to my invention. Fig. 2 is a top view of the cell illustrated in Fig. 1, the left cathode-roll being shown in section made along line *x x*, Fig. 1. Fig. 3 is a cross-section of a modified form of the cell shown in Figs. 1 and 2, made by the line *z z*, Fig. 4, being also constructed according to my invention. Fig. 4 is a top view of the cell shown in Fig. 3. Fig. 5 is a vertical central section of another form of cell. Fig. 6 is a top view of the cell shown in Fig. 5. Fig. 7 represents one form of anode. Fig. 8 represents a perspective view of a portion of the corrugated lead plate shown in cross-section in Fig. 1, the circles indicating the perforations. Fig. 9 represents a cross-section of a cathode-roll on the line *y y*, Fig. 2. Fig. 10 is a plan view of the screen broken away to show the anode A and support D. Fig. 11 is a plan view of one form of my anode.

The cell proper B in Figs. 1 and 2 consists of a rather flat wooden vessel V, covered externally and internally with lead *v*, or is constructed of any other suitable material, and is provided with a perforated false bottom D, over which the anode A is placed. The

latter may consist of lead plates (shown in Fig. 8) with rather high corrugations, also perforated, to allow the passage of the electrolyte, as shown, or may consist of pieces or plates of retort-carbon corrugated and perforated as above, or otherwise conveniently shaped, and in contact with or otherwise in electric connection with each other. Over this horizontal anode a filter layer or screen E is spread, consisting of two fine-wire screens on a frame *e e*, this forming the only separation between the lower or anode portion of the cell and the upper or cathode portion and preventing the liquid surrounding the anode from being agitated by the motion of the liquid surrounding the cathode.

The cathode consists of a number of cylindrical or prismatic bodies C C C, which are located in the upper part of the cell, resting on the bearings F F, and being completely submerged in the electrolyte. By means of a suitable mechanical connection B′ these cylinders can be kept in a slow and continual rotation. These cylinders can be made of wood, having a coat of wax *c* or of similar material, with a conducting metallic coating *c′* over it, the current being carried thereto through the gudgeons of the cylinders, or more directly by means of sliding pieces or contact-brushes, as shown at F′ in Figs. 3 and 4. The opposite pole of the battery is connected to the anode A through the side of the cell in any convenient way. The solution to be subjected to electrolysis containing a salt of the metal to be extracted, a ferrous salt, and free acid enters the upper or cathode stratum in a continuous stream through the pipe G, and after having been freed of the greater part of its metal, which is precipitated on the rotating cathodes C C C, passes slowly but continuously through the screen E into the anode portion of the cell. Here under the action of the anode the ferrous salts are oxidized and converted into ferric salts, and becoming heavier sink more and more, passing through the false bottom D into the bottom of the cell, whence they are drawn off by means of the siphon H, the height of which regulates the height of the electrolyte within the cathode portion of the cell. If the quantity of inflowing solution, the electric current, and the discharge of the oxidized solution are properly adjusted, the result of this process is that the solution to be subjected to electrolysis loses about two-thirds of its contents of the desired metal in the cathode portion of the cell, while in the anode portion of the cell its ferrous salts are converted into ferric ones, as is desired.

In Figs. 3 and 4 the anode A, consisting of carbon or of another suitable substance, forms a trough or channel, either of a semicircular section, as shown, or of the shape of a V. This anode is provided on its inner surfaces—the surfaces facing the cathode — with small wedge-shaped furrows or chamfers *a*. The cathode C is constructed in the manner described above, and is located inside of the anode, and is separated therefrom by means of the curved filtering-screen E, otherwise constructed as in Figs. 1 and 2, the latter being fixed to a suitable frame to retain it in position. It will be seen that by this arrangement a very large surface is provided, which is subjected to the action of the electric current. The solution, rich in the metal to be extracted, enters the cell in a divided stream by means of the pipe I, which runs above the cathode C, and in circulating around the latter, which is kept in continual rotation, as above described, loses the larger part of its metallic contents and passes through the filter E into the anode portion, where the oxidation of the ferrous salts sets in, and this is assisted by the above-mentioned furrows or chambers, as at their edges the oxidation commences, and the liquid growing heavier thereby sinks gradually deeper into their valleys between the edges, where the complete oxidation takes place, and from the deepest points of the valleys the liquid moves slowly to the lowest part of the cell, from which it is drawn off by means of the pipe H′. In this way the particles of the liquid move on simply by gravity in a manner most advantageous to the galvanic action, because as soon as the particles of the liquid are sufficiently oxidized at the edges of the furrows they leave these edges and make room for particles not yet oxidized. As a consequence, the resistance of the cell is kept very low, and even with an unusually strong electric current no polarization takes place.

In Figs. 5 and 6, B^2 is a circular vessel or tray, preferably made of hard lead, at the bottom of which the horizontal anode A^3 is placed, which may consist, as shown in the drawings, of a great number of short carbon rods or points, which, resting on the lead lining of the bottom of the cell, are in good electrical connection with the bottom of the lead vessel, or it may be formed of a grate composed of a number of horizontal carbon rods 1 1, with metallic bands 2 2 lying on either side of and in contact with the said carbon rods and secured to each other by bolts between the said rods holding them together, and said bands connected to each other and to the positive pole of the battery by strips 3 and wires 4, or through the metal composing the interior of the cell, or, as the above-described constructions of anode are equivalent to a furrowed or chambered anode, as shown in Figs. 3 and 4, the anode may consist of plates of carbon more or less grooved on their upper surfaces, presenting a cross-section, as at A in Fig. 1, and electrically connected.

Above the anode is a horizontally-stretched screen or filter of network E′, attached to the sides of the tray B^2.

Above the filter is the disk-shaped horizontal cathode C^2, which is secured to the vertical axle J, which rests in suitable bearings, is made of metal, and is in electrical connection

on the one hand with the source of electricity by means of sliding contacts H′ and on the other hand with the lower surface of the cathode K. By means of the pulley *h*, mounted on the axle J, the cathode can be kept in continual and slow motion. The solution to be subjected to electrolysis continuously flows through the axle J, which is hollow, down to the lower surface of the cathode C^2, where, by the rotatory motion thereof, it is thrown outward, where the electrolytical deposition takes place, while the solution, becoming poorer in metallic contents and being pushed gradually forward by the entrance of the fresh liquid, passes everywhere through the filter or screen E′ into the anode portion of the cell. Here the solution becoming oxidized and becoming heavier sinks more and more, and is finally withdrawn from the lowest portion by means of the pipe H^3.

All cells shown in Figs. 1 to 6 have, as we have seen, revolving cathodes, whereby a slight current or vibration of the electrolyte near the cathode is produced. This current or motion of the electrolyte near the cathode is absolutely necessary if we want to obtain a good quality of copper and to employ a great density of electric current per square foot of cathode-surface. It is clear that by this motion every moment new particles of the electrolyte must come in contact with the cathode, and as these new particles will always contain sufficient copper for electric precipitation no electric current is lost by evolving hydrogen instead of precipitating copper at the cathode, which otherwise—if the electrolyte near the cathode is kept without motion—would certainly take place. As this beneficial and necessary vibration or motion of the electrolyte is the only purpose of the rotating movement of the cathode, we can do without the latter if we effectuate the former by some other means.

It may be here stated that the filter or screen E in any of the forms shown herein is not so much used for the purpose of separating the liquid surrounding the cathode from the liquid surrounding the anode, but for the purpose of stopping the rotatory and shaking motion of the solution surrounding the cathode when it passes therethrough on its way to the anode and for protecting the already more or less oxidized solution near the anode from injurious currents, which would effect a mixing of the already-oxidized solution with the solution not yet oxidized and still rich in metallic contents, thus destroying the working of the apparatus, because the solution leaving the apparatus would neither be poor in metallic contents nor be sufficiently oxidized. On the other hand, as we have seen, a certain movement of the solution around the cathode has the valuable property of bringing new particles thereof continuously in contact with the latter, thereby promoting a quick and complete deposition of the metal and permitting at the same time the use of an unusual strong electric current per square foot of cathode-surface. It may be also added that in all forms of my invention shown herein the corresponding poles of a suitable source of electricity should be connected to the anode and cathode plates.

Having thus described my invention, what I claim, and desire to secure by Letters Patent, is—

1. In an electrolytical cell, the combination of a revolving cathode, a trough-shaped anode situated below the said cathode, in the trough of which the cathode revolves, a screen permitting the passage of the electrolyte and of electricity and capable of preventing the passage of vibrations of the electrolyte situated between the said cathode and anode, and means for supplying the electrolyte above the screen and for withdrawing the oxidized liquid from the bottom of the trough of the anode, as described.

2. In an electrolytical cell, the combination of a cathode, an anode beneath the said cathode formed of suitable material and having its faces furrowed or chamfered, and means for introducing the electrolyte to the cathode and for withdrawing the oxidized liquid from the base of the said furrows or chambers, as described.

3. In an electrolytical cell, the combination of a trough-shaped anode formed of suitable material, having its internal faces furrowed or chamfered, a revolving cathode above the anode and in the trough thereof, a screen permitting the passage of the electrolyte and of electricity, and capable of preventing the passage of vibrations of the electrolyte situated between the said cathode and anode, and means for supplying the electrolyte above the screen and for withdrawing the oxidized liquid from the bottom of the trough of the anode, as described.

In testimony whereof I have hereunto set my hand in presence of two witnesses.

WERNER VON SIEMENS.

Witnesses:
W. H. EDWARDS,
W. HAUPT.