(19) DANMARK

(10) DK/EP 2914978 T3

(12) Oversættelse af europæisk patentskrift

Patent- og Varemærkestyrelsen

(51) Int.Cl.: *F 28 G 15/00 (2006.01)* *G 21 C 17/00 (2006.01)*

(45) Oversættelsen bekendtgjort den: **2017-07-24**

(80) Dato for Den Europæiske Patentmyndigheds bekendtgørelse om meddelelse af patentet: **2017-04-12**

(86) Europæisk ansøgning nr.: **13798370.6**

(86) Europæisk indleveringsdag: **2013-11-01**

(87) Den europæiske ansøgnings publiceringsdag: **2015-09-09**

(86) International ansøgning nr.: **GB2013052857**

(87) Internationalt publikationsnr.: **WO2014068325**

(30) Prioritet: **2012-11-02 GB 201219764**

(84) Designerede stater: **AL AT BE BG CH CY CZ DE DK EE ES FI FR GB GR HR HU IE IS IT LI LT LU LV MC MK MT NL NO PL PT RO RS SE SI SK SM TR**

(73) Patenthaver: **Epsco Limited, Arran Road, Perth PH1 3DZ, Storbritannien**

(72) Opfinder: **SMITH, Stuart Oliver, The Old School House, Kinclaven, Perthshire PH1 4QJ, Storbritannien**

(74) Fuldmægtig i Danmark: **Plougmann Vingtoft A/S, Rued Langgaards Vej 8, 2300 København S, Danmark**

(54) Benævnelse: **FREMGANGSMÅDE OG APPARAT TIL INSPEKTION AF KØLETÅRN**

(56) Fremdragne publikationer:
US-A1- 2010 229 953
REBECCA M WILLIAMS ET AL: "An autonomous robotic platform for ground penetrating radar surveys", GEOSCIENCE AND REMOTE SENSING SYMPOSIUM (IGARSS), 2012 IEEE INTERNATIONAL, IEEE, 22 July 2012 (2012-07-22), pages 3174-3177, XP032468678, DOI: 10.1109/IGARSS.2012.6350750 ISBN: 978-1-4673-1160-1
ATINDRA K MITRA: "Ground-UAV platform geometries for radar imaging", AEROSPACE AND ELECTRONICS CONFERENCE (NAECON), PROCEEDINGS OF THE IEEE 2010 NATIONAL, IEEE, 14 July 2010 (2010-07-14), pages 76-83, XP031913796, DOI: 10.1109/NAECON.2010.5712928 ISBN: 978-1-4244-6576-7
WALLHUER E ET AL: "Detection methods of fouling in heat exchangers in the food industry", FOOD CONTROL, BUTTERWORTH, LONDON, GB, vol. 27, no. 1, 28 February 2012 (2012-02-28), pages 1-10, XP028482102, ISSN: 0956-7135, DOI: 10.1016/J.FOODCONT.2012.02.033 [retrieved on 2012-03-06]

DESCRIPTION

Field of the Invention

[0001] This invention relates to a method for the inspection of cooling towers to detect and map areas of fouling, and to a method of cleaning cooling towers.

Background of the Invention

[0002] The following description will refer particularly to large, natural draft cooling towers of hyperbolic shape, such as are commonly used in power stations. However, the invention is also applicable to other types of cooling tower, such as forced or induced draft cooling towers.

[0003] In a cooling tower, process water is passed downwardly against a counterflow of cooling air. The water is typically distributed by pipes across the top surface of a packing or fill pack. The fill pack is present to break up the water into droplets so as to produce a large surface area of water for contact with the cooling air, and the fill pack typically consists of plastic tubes and flutes.

[0004] Over time, fouling builds up in the fill pack. The fouling consists of scale from minerals and organic matter precipitated from the process water, and biological fouling consisting for example of algae and bacteria. The fouling reduces the available flow area and thus efficiency, and is also a potential health hazard. Periodic cleaning of the fill pack is therefore necessary.

[0005] Traditionally, due to difficulties in accessing, removing and cleaning the fill pack, towers have often become exponentially fouled. Techniques for combatting this have focused on on-going water treatment/dosing and/or filtration; these can act to slow down fouling but essentially only limit the rate of build-up. Traditional methods of cleaning have involved pack removal and high pressure jetting; this has problems such as damage to the fill pack during removal, erection of containment areas to limit bacterial spread, and issues of time and cost.

[0006] The document "Detection methods of fouling in heat exchangers in the food industry" by WALLHUER E ET AL (XP028482102) gives an overview of different methods known to detect fouling: methods based on pressure drop, temperature and heat transfer parameters, electrical parameters and acoustic methods.

[0007] Experience has shown that cooling tower users desire an ability to gauge the level of fouling over time. This information can allow better interim management and decision making as to maintenance options. Hitherto this has been attempted by removal of pack sections for visual inspection, and removal and in-situ pack weighing. More recently, endoscopic techniques have been used to visually check pack flutes for deposition. These all have some

utility but each has drawbacks, notably that they all check isolated sections to act as representative for the entire tower. The present invention seeks to overcome or mitigate these problems.

Summary of the Invention

[0008] The present invention provides a method of inspecting cooling tower fill pack to detect the presence of fouling, the method comprising the use of ground penetrating radar (GPR).

[0009] The invention is based on the unexpected discovery that ground penetrating radar can provide useful, accurate data in a structure which consists largely of void. This is in contrast to the usual applications of GPR such as inspection of concrete structures and archaeology, where the volume under inspection is entirely or largely solid.

[0010] The present invention provides a method of inspecting cooling tower fill pack to detect the presence of fouling in accordance with claim 1, and a method of cleaning fouling from a cooling tower in accordance with claim 13.

[0011] In one embodiment, the GPR apparatus is moved across the top surface of the fill pack in a series of parallel scan lines.

[0012] The GPR apparatus may be substantially in contact with the surface of the fill pack. Alternatively, the GPR apparatus may be spaced from the surface of the fill pack. In this arrangement the GPR apparatus is not in contact with the fill pack.

[0013] The GPR apparatus may be mounted on a remotely operable vehicle (ROV), suitably a tracked vehicle. The GPR apparatus may be a hand-operated apparatus. In this arrangement the GPR apparatus may be carried by hand by the operating personnel, and the operating personnel may move across the surface of the fill pack.

[0014] The GPR apparatus may be mounted on a remotely operable vehicle (ROV). The ROV may be radio-controlled and/or controlled-by-wire.

[0015] The ROV may be a wheeled vehicle. The ROV may be a tracked vehicle. The ROV may be a vehicle capable of flying. The ROV may be a floating vehicle. The ROV may be a helicopter. The ROV may be an aeroplane.

[0016] The ROV may also mount a data logger arranged to store GPR data for subsequent downloading and analysis and may be provided with a video camera.

[0017] The ROV may also mount a data logger arranged to store GPR data for subsequent downloading and analysis.

[0018] The ROV may also be provided with a video camera.

[0019] The step of processing the received GPR data to form a three-dimensional plot of the location and degree of fouling within the fill pack may include the step of distinguishing the fill pack from the fouling thereon. The step may include filtering, ignoring or deleting received data relating to the fill pack. The GPR apparatus may be configurable to identify/recognise and ignore the fill pack structure itself via the programming of appropriate relative densities or dielectric constants for the particular materials of construction of the fill pack. In this arrangement the GPR apparatus may be configurable to recognise a fill pack that is made of plastic, polyvinyl chloride (PVC), metal, asbestos, wood, or the like.

[0020] The ROV may be configured such that it is capable of moving relative to the surface of the fill pack without damaging the fill pack.

[0021] The ROV may be radio-controlled and/or controlled-by-wire.

[0022] The ROV may be a wheeled vehicle. The ROV may be a tracked vehicle. The ROV may be a vehicle capable of flying. The ROV may be a floating vehicle. The ROV may be a helicopter. The ROV may be an aeroplane.

[0023] The GPR apparatus may be mounted on a remotely controlled vehicle (ROV).

[0024] The ROV may also mount a data logger arranged to store GPR data for subsequent downloading and analysis.

[0025] The ROV may be provided with a video camera.

Brief Description of the Drawings

[0026] An embodiment of the invention will now be described, by way of example only, with reference to the drawings, in which:

Fig. 1 is a diagrammatic cross-section of one form of cooling tower;

Fig. 2 is a partial cross-section, to an enlarged scale, of the cooling tower of Fig. 1;

Fig. 3 is a perspective view of a remotely operated vehicle used in this embodiment;

Fig. 4 is a side view illustrating operation of the remotely operated vehicle; and

Fig. 5 is a plan view of one-quarter of the fill pack showing the path of the remotely operated vehicle.

Detailed Description

[0027] Referring to Fig. 1, one form of cooling tower comprises a parabolic concrete shell 10 supported clear of the ground on pillars 12. Process water to be cooled is distributed via pipes 14 and sprayed onto and through a volume of fill pack 16, finally collecting in a pond or sump 18 for re-use or discharge.

[0028] Fig. 2 shows part of the cooling tower in more detail. It will be seen that distribution pipe 14 is provided with spray nozzles 20. Drift eliminators 22 are positioned above the pipes 14.

[0029] The method of the invention is preferably carried out by a remotely operated vehicle (ROV) 24. Any suitable ROV may be used; one suitable example is the HD2 Robot by Superdroid Robots Inc. of Fuquay Varina, North Carolina. This is illustrated schematically in Fig. 3, and comprises a chassis 26 carried by rubber tracks 28 driven by motors 30. A video camera 32 is mounted at the front of the ROV 24 and can be tilted by a tilt motor (not shown). The motors 30 are provided with encoders which give a measure of distance moved. The ROV 24 is controlled by a remote radio control unit with one joystick to control forward/reverse and steering and another joystick to control camera tilt.

[0030] The ROV 24 carries a GPR apparatus 34 and a data logger 36. One example of a suitable GPR apparatus is the GSSI TerraSIRch SIR System 3000 (commonly referred to as SIR-3000) by Geophysical Survey Systems, Inc. of Salem, New Hampshire. The same company provides a suitable data logger. However, any suitable form of GPR apparatus may be used.

[0031] A preferred frequency for this use is an antenna frequency of 400MHz, although other frequencies may be suitable. The preferred mode of GPR operation is distance based collection. This associates the scans with a linear distance, and is required to produce a 3D model. The motor encoders provide data on horizontal distance travelled for production of the 3D model; however alternative distance inputs are possible, for example a manually pushed GPR apparatus could be provided with a trundle wheel or the like. The GPR apparatus 34 could be used in time mode for ad hoc scanning, which could be useful in terms of information on a manually input distance.

[0032] Referring now to Figs. 4 and 5, in use the operating personnel access the top surface 38 of the fill pack 16. The ROV 24 is positioned on the top surface 38 and is driven across it in a series of straight-line scans 40. It will typically be convenient to direct the ROV 24 from the centre to the periphery, reverse it back to the centre, move it sideways, and repeat the procedure. In doing this, it may be convenient to set up a series of aiming marks at the periphery. However, other scanning patterns are possible. For example, the ROV on reaching the periphery could be steered a short distance around the periphery and driven back to the

centre along a parallel line; or a spiral scan could be used.

[0033] On each scan GPR data is stored in the data logger 36. As in normal GPR use, the radar echo varies at surfaces or discontinuities between media of different density, and the time of receipt defines the depth. The data is subsequently downloaded to a computer which generates a 3D map indicating the degree of fouling at each location. The GPR apparatus is configured to recognise and ignore the fill pack structure itself via the programming of appropriate relative densities or dielectric constants for the particular materials of construction. The generation and interpretation of the 3D map is similar to those used in underground or structural surveys and will be apparent to one of ordinary skill in using GPR.

[0034] Once this information is available, a determination can be made as to the cleanliness of different parts of the fill pack 16 require to be cleaned. It may be useful also to inspect selected areas of the fill pack with an endoscope in order to correlate the GPR signals visually with the degree of fouling. The procedure allows for a more targeted and efficient cleaning process; for example there could be three repeated treatments in one area and only a single treatment in another.

[0035] The present invention thus provides an improved method of inspection of cooling towers. The invention enables a more complete survey of the fill pack, not simply parts of it, and this can be done without disassembly and re-assembly of the fill pack.

[0036] While this invention has been described with reference to the sample embodiments thereof, it will be appreciated by those of ordinary skill in the art that modifications can be made to the structure and elements of the invention without departing from the spirit and scope of the invention as a whole.

[0037] Furthermore, although in the method of inspecting cooling tower fill pack illustrated and described above the ROV 24 has been described as being a tracked vehicle that rides on the top surface of the fill pack 16, it should be appreciated that the ROV may not necessarily have to be a tracked vehicle that rides on the top surface of the fill pack 16. For example, the ROV does not have to operate on the top surface of the fill pack 16. The ROV may be moved relative to any surface of the fill pack 16, e.g. the top surface, bottom surface or a side surface. Furthermore, the ROV does not have to be in contact with the surface itself. The ROV may, for example, be spaced from the surface of the fill pack 16. That is, there may be a gap between the ROV and the surface of the fill pack 16.

[0038] Also, although the ROV 24 has been illustrated and described above as being a tracked vehicle, it should be appreciated that the ROV may be a wheeled vehicle, a vehicle capable of flying or a vehicle capable of floating. In the instance where the ROV is a vehicle capable of flying, the vehicle may be an aeroplane or a helicopter, or the like. In the instance where the ROV is a vehicle capable of floating, the ROV may be a powered boat, or powered vessel, which may be located in the pond or sump 18. In this instance the ROV would scan, or be operative with, the lower (bottom) surface of the fill pack 16.

[0039] Again, the motor encoders of the ROV provide data on horizontal distance travelled for production of the 3D model; however alternative distance inputs are possible, for example a manually pushed apparatus could be provided with a trundle wheel or the like. The apparatus could be used in time mode for ad hoc scanning, which could be useful in terms of information on a manually input distance.

[0040] In use the operating personnel access the top surface 38 of the fill pack 16. The ROV 24 is positioned on the top surface 38 and is driven across it in a series of straight-line scans 40. It will typically be convenient to direct the ROV 24 from the centre to the periphery, reverse it back to the centre, move it sideways, and repeat the procedure. In doing this, it may be convenient to set up a series of aiming marks at the periphery. However, other scanning patterns are possible. For example, the ROV on reaching the periphery could be steered a short distance around the periphery and driven back to the centre along a parallel line; or a spiral scan could be used.

Patentkrav

1. Fremgangsmåde til at inspicere køletårnsfyldpakning (16) for at detektere tilstedeværelsen af tilsmudsning, hvilken fremgangsmåde omfatter:

at tilvejebringe et jordpenetrerende radar (GPR) -apparat (34);

at bevæge GPR-apparatet (34) i forhold til den øverste flade (38), bundfladen eller sidefladen af fyldpakningen (16); og

at behandle modtaget GPR-data for at danne en tredimensionel kortlægning af positionen og graden af tilsmudsning i fyldpakningen (16).

2. Fremgangsmåden ifølge krav 1, hvor driftsformen af GPR'et er afstandsbaseret dataindsamling.

3. Fremgangsmåden ifølge krav 1 eller krav 2, hvor GPR-apparatet (34) er tværgående over toppen af fyldpakningen (16) i en serie af parallelle skanderingslinjer (40).

4. Fremgangsmåden ifølge et hvilket som helst af de foregående krav, hvor GPR-apparatet (34) monteres på et fjerndrevet køretøj (ROV) (24).

5. Fremgangsmåden ifølge krav 4, hvor ROV'et (24) er et bæltekøretøj, et hjulkøretøj, et køretøj i stand til at flyve, eller et køretøj i stand til at flyde.

6. Fremgangsmåden ifølge krav 4 eller krav 5, hvor ROV'et (24) også fører en datalogger (36) indrettet til at lagre GPR-data til efterfølgende download og analyse.

7. Fremgangsmåden ifølge et hvilket som helst af kravene 4 til 6, hvor ROV'et (24) forsynes med et videokamera.

8. Fremgangsmåden ifølge et hvilket som helst af de foregående krav, hvor trinnet at behandle det modtagne GPR-data for at danne en tredimensionel kortlægning af positionen og graden af tilsmudsning i fyldpakningen (16) inkluderer trinnet at skelne fyldpakningen (16) fra tilsmudsningen derpå.

9. Fremgangsmåden ifølge krav 8, hvor fremgangsmåden inkluderer at filtrere, ignorere og/eller slette modtaget data, der relaterer til fyldpakningen (16).

10. Fremgangsmåden ifølge krav 8 eller krav 9, hvor GPR-apparatet (34) er konfigurerbart til at identificere eller genkende og ignorere selve fyldpaknings (16) –strukturen via programmeringen af egnede relative densiteter eller dielektriske konstanter for de bestemte konstruktionsmaterialer af fyldpakningen (16).

11. Fremgangsmåden ifølge et hvilket som helst af kravene 8 til 10, hvor trinnet at behandle det modtagne GPR-data for at danne en tredimensionel kortlægning af positionen og graden af tilsmudsning i fyldpakningen (16) inkluderer at analysere det modtagne GPR-data for at hjælpe med bestemmelse af aflejringstype og opbygning af tilsmudsningen.

12. Fremgangsmåden ifølge et hvilket som helst af kravene 1 til 3, hvor GPR-apparatet (34) er et håndholdt apparat.

13. Fremgangsmåde til rengøring af tilsmudsning fra et køletårn, omfattende trinnene:

at tilvejebringe et jordpenetrerende radar (GPR) -apparat (34);

at inspicere køletårnsfyldpakningen (16) af køletårnet med GPR ved at bevæge GPR-apparatet (34) i forhold til den øverste flade (38), bundfladen eller sidefladen af fyldpakningen (16);

at behandle modtaget GPR-data for at danne en tredimensionel kortlægning af positionen og graden af tilsmudsning i fyldpakningen (16);

at identificere de dele af fyldpakningen (16), hvor uacceptable niveauer af tilsmudsning er til stede; og

at rengøre delene derved identificeret.

DRAWINGS

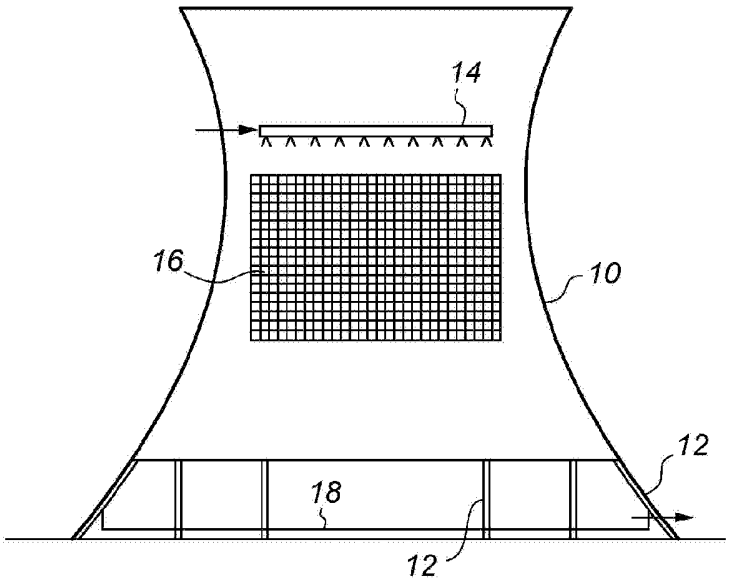

Fig. 1

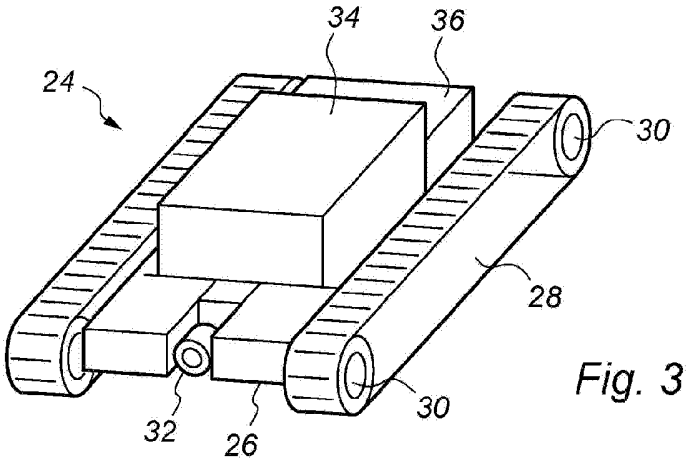

Fig. 3

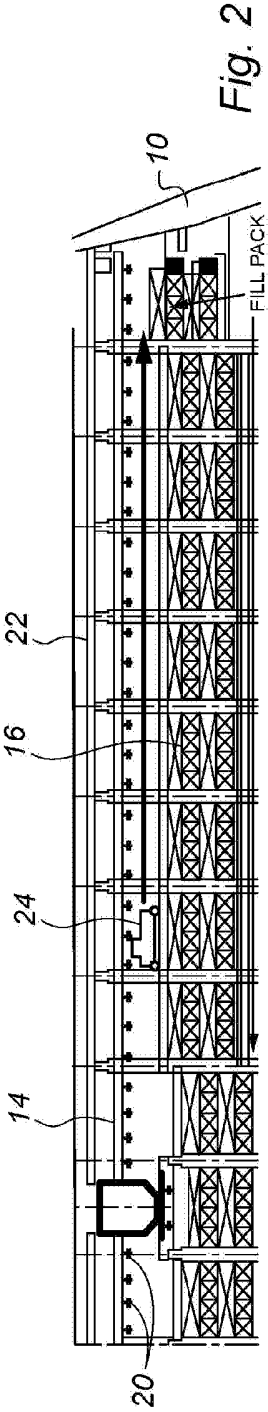

Fig. 2

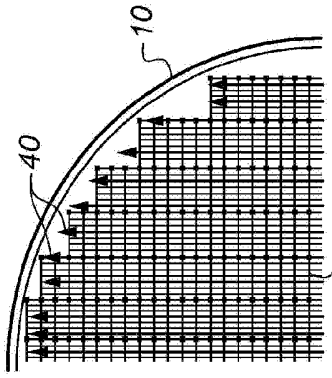

Fig. 5

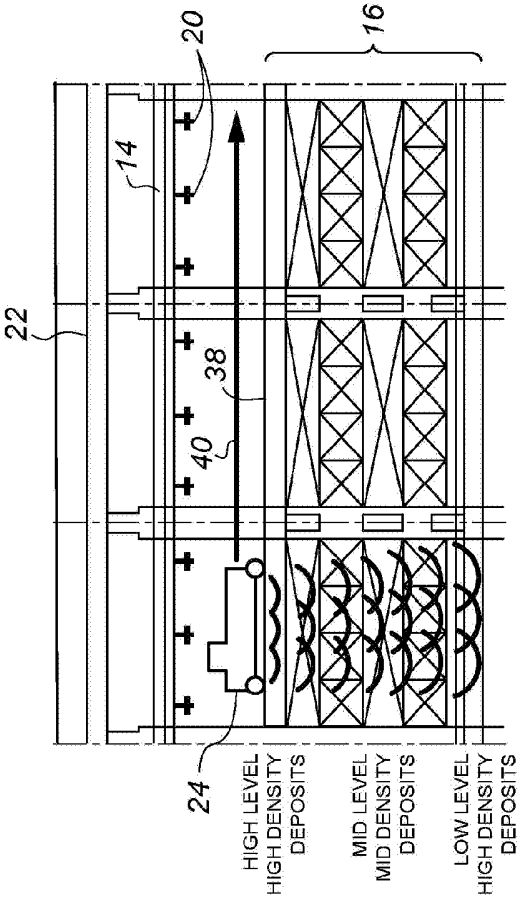

Fig. 4