Feb. 28, 1967 N. F. BROWN 3,306,317

HIGH AND LOW PRESSURE-RESPONSIVE ACTUATING MECHANISM FOR PLUG-TYPE VALVES

Filed Oct. 29, 1962 6 Sheets-Sheet 1

FIG. 1

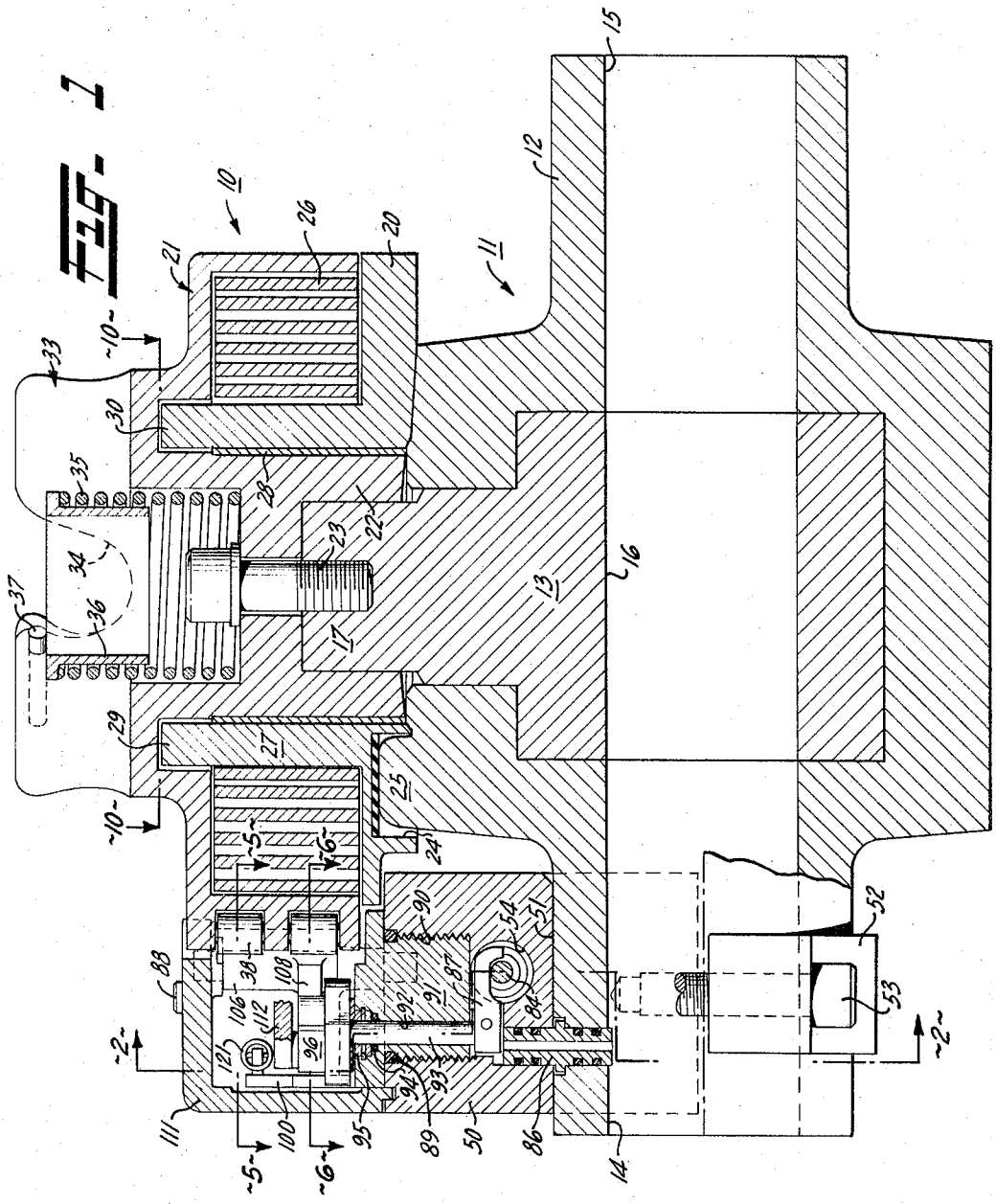

INVENTOR:
NORMAN F. BROWN

BY
Mellin and Hanscom
ATTORNEYS

Feb. 28, 1967 N. F. BROWN 3,306,317

HIGH AND LOW PRESSURE-RESPONSIVE ACTUATING MECHANISM FOR PLUG-TYPE VALVES

Filed Oct. 29, 1962 6 Sheets-Sheet 2

FIG. 2

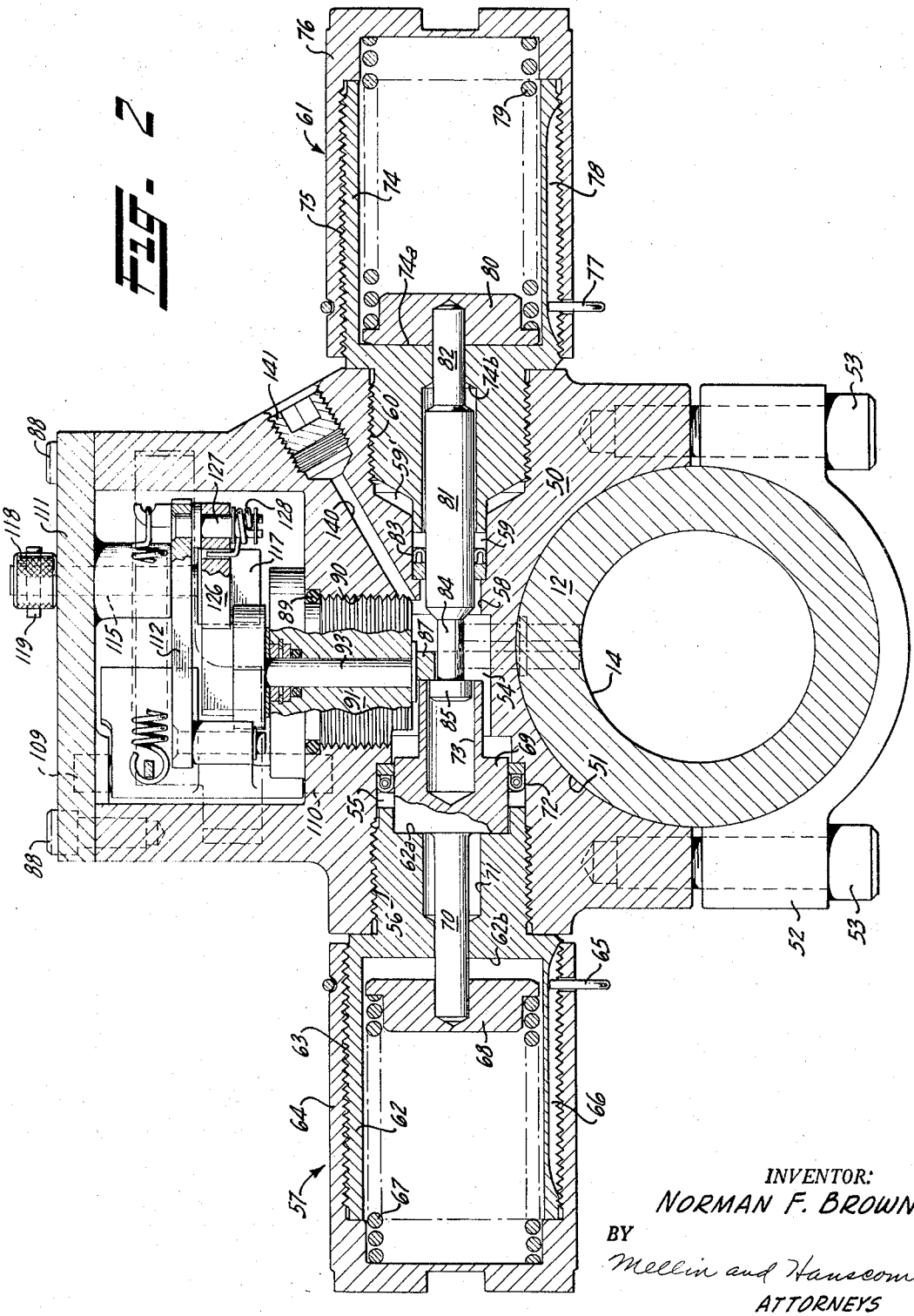

INVENTOR:
NORMAN F. BROWN

BY
Mellin and Hanscom
ATTORNEYS

Feb. 28, 1967 N. F. BROWN 3,306,317

HIGH AND LOW PRESSURE-RESPONSIVE ACTUATING MECHANISM FOR PLUG-TYPE VALVES

Filed Oct. 29, 1962 6 Sheets-Sheet 3

Fig. 3

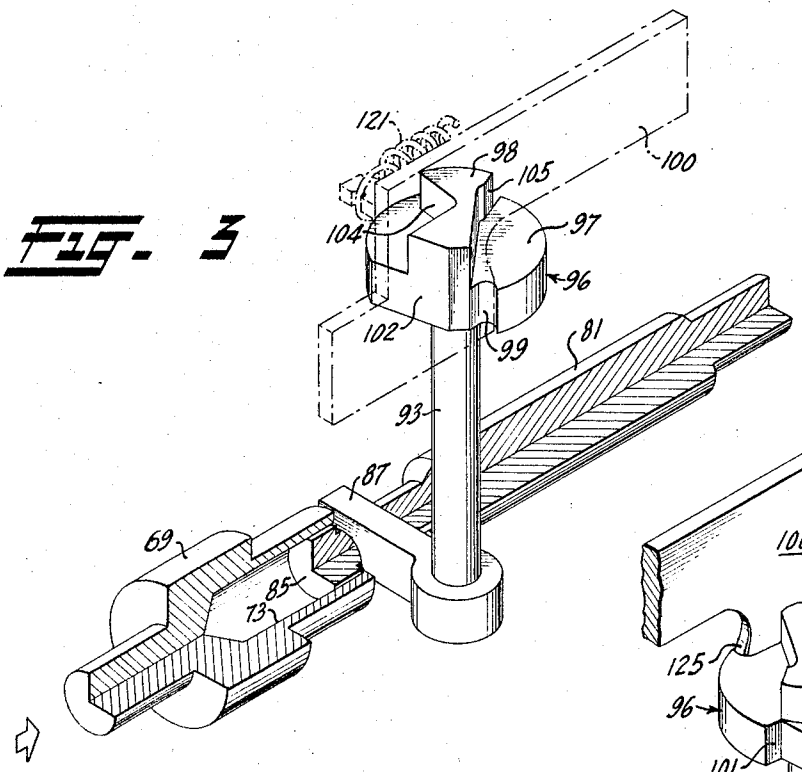

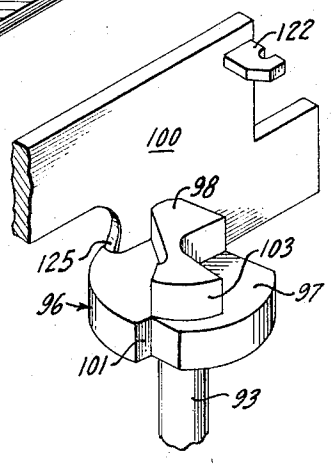

Fig. 3a

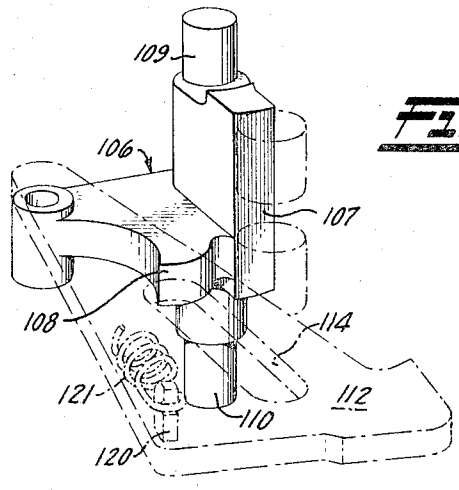

Fig. 4

INVENTOR:
NORMAN F. BROWN

BY
Mellin and Hanscom
ATTORNEYS

Feb. 28, 1967 N. F. BROWN 3,306,317

HIGH AND LOW PRESSURE-RESPONSIVE ACTUATING MECHANISM FOR PLUG-TYPE VALVES

Filed Oct. 29, 1962 6 Sheets-Sheet 4

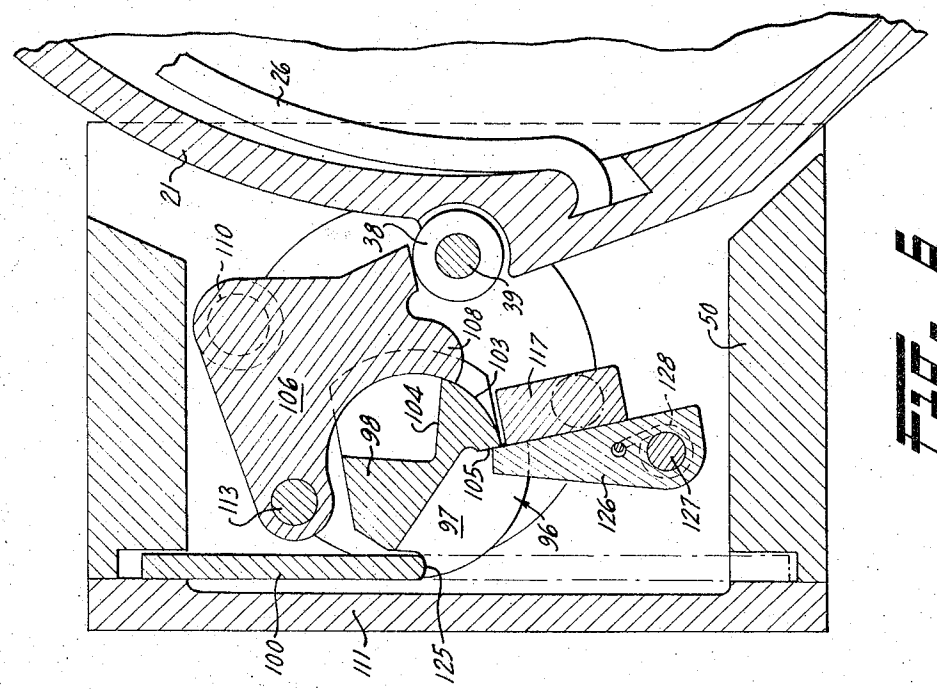

FIG. 6

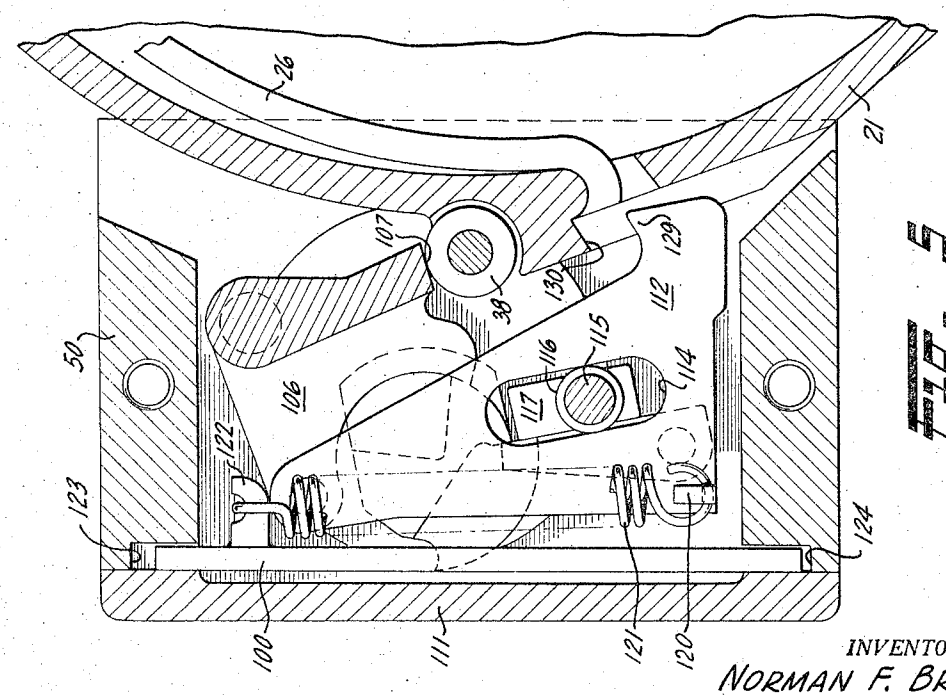

FIG. 5

INVENTOR:
NORMAN F. BROWN

BY
Mellin and Hanscom
ATTORNEYS

Feb. 28, 1967 N. F. BROWN 3,306,317

HIGH AND LOW PRESSURE-RESPONSIVE ACTUATING MECHANISM FOR PLUG-TYPE VALVES

Filed Oct. 29, 1962 6 Sheets-Sheet 5

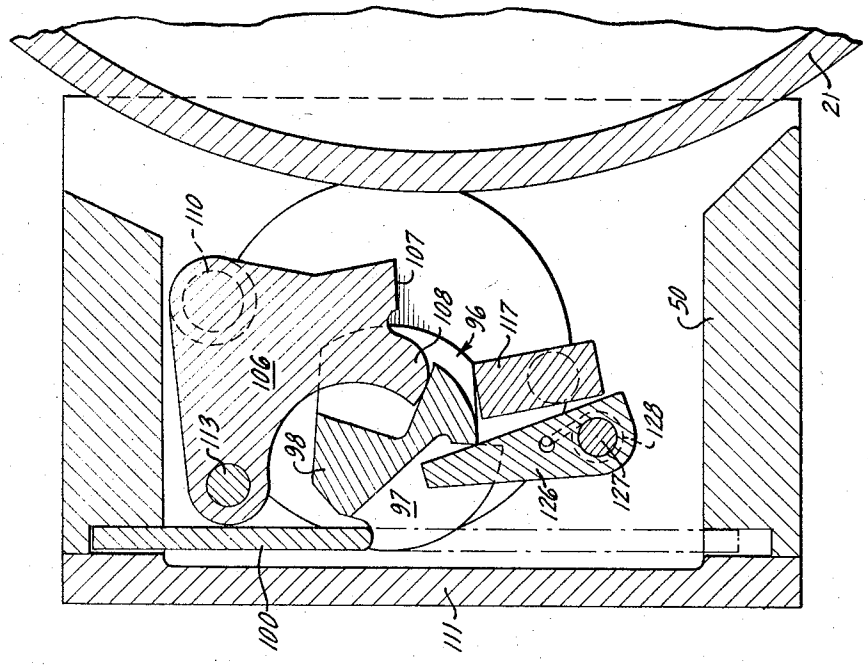

FIG. 8

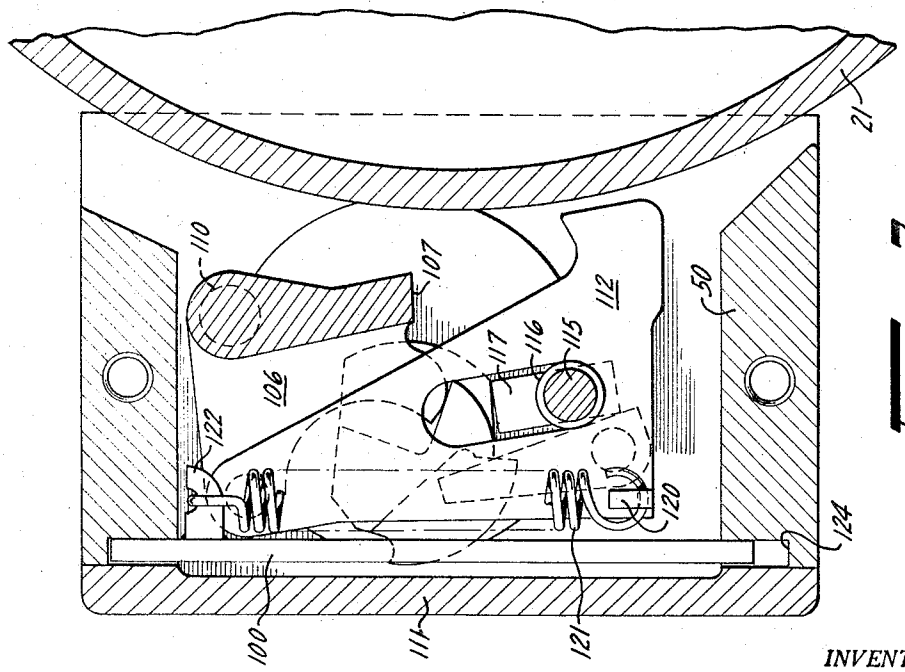

FIG. 7

INVENTOR:
NORMAN F. BROWN

BY
Mellin and Hanscom
ATTORNEYS

Feb. 28, 1967 N. F. BROWN 3,306,317

HIGH AND LOW PRESSURE-RESPONSIVE ACTUATING MECHANISM FOR PLUG-TYPE VALVES

Filed Oct. 29, 1962 6 Sheets-Sheet 6

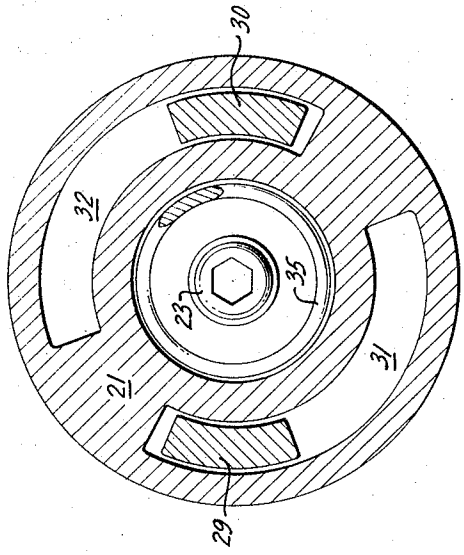

FIG. 10

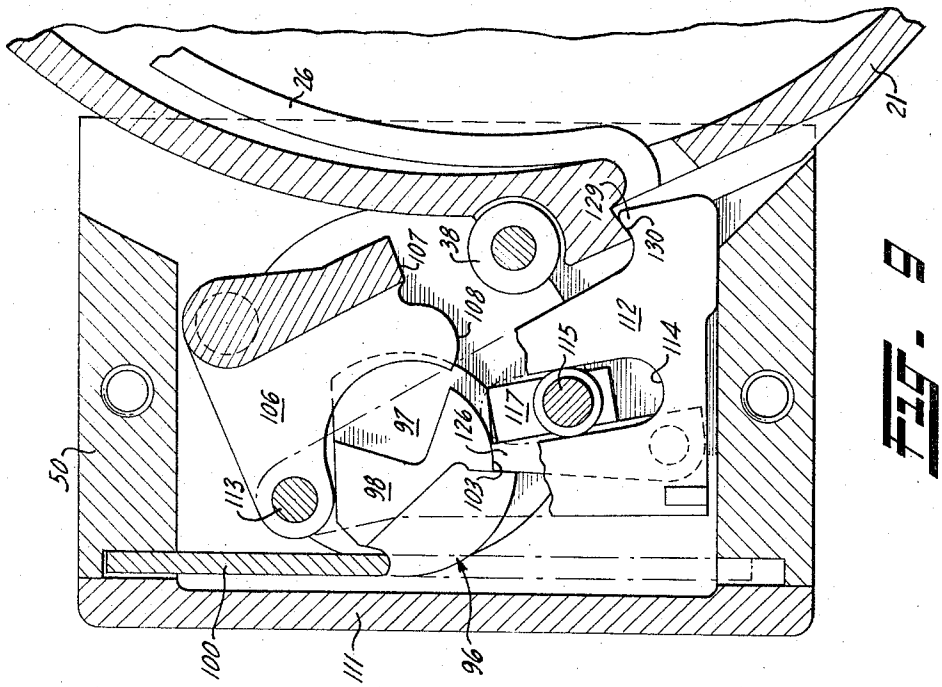

FIG. 9

INVENTOR:
NORMAN F. BROWN
BY
Mellin and Hanscom
ATTORNEYS

United States Patent Office 3,306,317
Patented Feb. 28, 1967

3,306,317

HIGH AND LOW PRESSURE-RESPONSIVE ACTUATING MECHANISM FOR PLUG-TYPE VALVES

Norman F. Brown, Dallas, Tex., assignor to Otis Engineering Corporation, Dallas, Tex., a corporation of Delaware

Filed Oct. 29, 1962, Ser. No. 233,755
9 Claims. (Cl. 137—458)

This invention relates to an actuating mechanism for a plug-type valve and more particularly to a valve operating mechanism responsive to high and low pressure conditions, that is spring-powered, and may be attached to a conventional plug valve. Such a mechanism is of particular value in the oil well industry to protect well-production apparatus, since it provides what is known as a safety-type valve.

A safety valve is commonly used in well safety control systems in which an instrument air line network is normally maintained at a low or high pressure by air or gas from a bottle or other source. Various sensing devices are then connected between the instrument air network and the various portions of the well production apparatus to be protected. When any portion of the production apparatus gets out of its predetermined safe pressure range, the sensing device associated with that apparatus automatically vents or exhausts the instrument air network, causing any safety valves controlled by it to be closed, thereby providing the necessary safety and protection for the equipment.

In some instances, a safety valve may be connected in a flow line having a predetermined range of pressures for normal operation. The safety valve is equipped with pilots that respond to abnormal pressures within the flow line for shutting the valve and preventing fluid flow under adverse operating conditions. Such valves have been made which respond to high or low pressures and also to various combinations of high and low pressures.

It is also to be realized that some safety valves are required to open in an emergency while other are required to close. In most instances, a safety valve is adapted to do one or the other of these features, but not both.

From the above general discussion it will be evident that safety valves controlled by pressure-sensitive pilots, including pilots responsive to adversely high or low pressures, are quite common in the oil well industry. But many of these devices have several shortcomings. For example, the more commonly known safety valves are quite costly, and their structures have been such that accumulations of paraffin, sand or debris have jammed the mechanisms, rendering them inoperable.

The present invention is embodied in an actuating mechanism that may be attached to a conventional rotary-type plug valve for either opening or closing said valve in an emergency. The actuating mechanism provided requires that the valve must be manually reset for either type of operation to which it may be applied, thereby avoiding inadvertency of operation. While the valve-actuating method described in connection with the drawings is adapted for closing a valve under abnormal pressure conditions, it should be understood that the actuating mechanism could as well be used for opening the valve.

One object of this invention is to provide a safety valve including an actuating mechanism for use with a basic plug-type valve and having a pivoted valve element.

Another object of the invention is to provide a spring-powered mechanism including high and low pressure-responsive pilots that may be attached to a well-known plug valve for either opening or closing the valve in an emergency.

It is another important object of the invention to provide a safety valve having high and low pressure pilots and which is manually resettable with a minimum of effort.

Another object is to provide a safety valve having high and low pressure pilots which can be returned to service although the pressures within the pilots may be temporarily out of range. It will become evident that once the valve has been reset it requires no further attention, since the triggering mechanism for closing the valve (or opening the valve) will be automatically reset when the pressure within the control mechanism comes into a predetermined normal range of pressures.

A still further object of the invention is to provide a safety valve including a spring-powered mechanism which will be automatically triggered for either opening or closing the valve when the pressure in its flow passage falls below or rises above the respective settings of its low or high pilots.

Another object is to provide a safety valve of the kind described in which the high and low pressure limits at which the valve is to close or open may be independently adjusted.

Another object of the invention is to provide a pressure-responsive actuating mechanism including high and low pilots which do not depend upon the elimination or the bleeding of fluids, and it is therefore more suitable for operation in adverse climatic conditions than mechanisms which are so dependent.

A further object is to provide a unitized pressure pilot and actuating mechanism for a plug valve which is shaped to fit snugly against the body of the valve through which comparatively warm fluid is flowing. Accordingly, although ambient air temperatures may be as low as 40° below zero, warm fluid passing through the valve will maintain the actuating mechanism in an operative condition by preventing a freezing of control liquids.

Another object of the invention is to provide a safety valve actuating mechanism including high and low pressure-responsive pilots and which can be readily tested at periodic intervals to ensure that it will function properly if and when abnormal pressure conditions exist.

Other object of this invention will become apparent in view of the following detailed description and the accompanying drawings.

In the drawings forming a part of this application, and in which like parts are identified by like reference numerals throughout the same,

FIG. 1 is a substantially longitudinal center section of a safety-type valve such as contemplated by this invention;

FIG. 2 is a substantial section and partial elevation taken on the broken lines 2—2 of FIG. 1;

FIGS. 3 and 3*a* are perspective views of a portion of the triggering mechanism which controls the operation of the valve;

FIG. 4 is a perspective view of another portion of the triggering mechanism that controls the valve;

FIG. 5 is a section taken on lines 5—5 of FIG. 1;

FIG. 6 is a section taken on lines 6—6 of FIG. 1;

FIGS. 7 and 8 are sections corresponding to FIGS. 5 and 6, respectively, but showing the triggering mechanism in a second position of movement;

FIG. 9 is another section of the latching and triggering mechanism, portions being broken away but corresponding largely with FIG. 5 to show another position of operation; and

FIG. 10 is a section taken on lines 10—10 of FIG. 1.

Referring to the drawings, there is shown a preferred embodiment of this invention in a pressure-responsive actuating mechanism **10** for a plug-type valve **11** which is of conventional design, comprising a body **12** and having a rotatable or pivoted valve element **13**. For the purpose

of this disclosure, valve 11 may be like that of the Haliburton low-torque plug valve illustrated and described on page 2308 of the Composite Catalog of Oil Field Equipment and Services, 1960–61 edition. Body 12 is provided with inlet and outlet fluid passages 14 and 15, respectively, and the plug 13 is formed with a passage 16 which can be either aligned or misaligned with passages 14 and 15 by rotating the plug as desired. Plug 13 is rotated by applying a torque to the plug stem 17 which extends or protrudes from the body 12.

The actuating mechanism 10 provides means for applying a torque to the plug stem 17 and includes a latching mechanism for retaining the plug 13 in a position opposing the torque-applying means. Additionally, actuating mechanism 10 includes a triggering device responsive to the pressure of the fluid flow through the valve (or to the pressure of some control line) for moving the latching mechanism into a position of release, allowing the torque-applying means to pivot plug stem 17.

Referring to FIG. 1, actuating mechanism 10 includes a mounting plate 20, which is nonrotatable relative to the valve body 12, and a spring-operated drum 21 having an internal sleeve portion 22 rigidly secured to the end of stem 17 by means of a screw 23. Plate 20 is formed with three angularly spaced recesses 24 for receiving a conventional locating projection 25 formed on valve body 12. With such an arrangement, screw 23 need be the only means for attaching plate 20 to the valve.

A coiled clock spring 26 is disposed within the housing 21, the outermost coil of spring 26 being secured to drum 21 and the inner coil of the spring being connected to a cylindrical hub sleeve portion 27 forming a part of the mounting plate 20 and projecting coaxially of valve stem 17. Hub sleeve 27 accepts the sleeve portion 22 of drum 21 and a bushing 28 is disposed therebetween, permitting a smooth operation of the drum as it rotates relative to mounting plate 20. Sleeve portion 22 is formed with a hexagonal recess complementally shaped to the hexagonal cross section of the conventional valve stem 17. Thus, any rotation of the drum 21 will correspondingly rotate valve stem 17 and the valve element 13. Although clock spring 26 may be secured to the drum 21 and sleeve portion 27 by any suitable means, the ends of the spring may be hooked into recesses of the drum and sleeve portion in a manner such as shown.

A pair of lugs 29 and 30 extend from the end of sleeve portion 27 and are received in arcuate grooves 31 and 32, respectively, of drum housing 21, as best shown in FIG. 10. This structure limits the rotational movement of the drum relative to the moutning plate and such movement is restricted to slightly more than 90°. A rotational movement of the drum to close valve 11 is arrested by the engagement of the lugs with the ends of the grooves. Similarly, a rotational movement of the drum to open the valve is again limited by the engagement of the lugs but with the opposite ends of the grooves.

Drum housing 21 is formed with an external sleeve portion 33 formed with a pair of symmetrical notches 34 extending from an outer end and adapted to be engaged by an operating bar extending diametrically of the pivoted valve element. Although an operating bar has not been shown, it will be evident that such means may be employed for the purpose of turning the drum against the force of the clock spring, thereby opening the valve. Means is provided within the external sleeve portion 33 for exerting a bias force tending to dislodge any operating bar that is but loosely engaged with the notches. For this purpose, a helical spring 35 and a plug 36 are axially disposed within sleeve portion 33 and a pair of pins 37 are employed for retaining the plug within the sleeve. Plug 36 is, of course, biased into a position tending to dislodge an operating bar which may have been inadvertently left in engagement with the notches 34. The notches themselves, it will be seen, are formed in such a manner that an operating bar may be easily dislodged by the force of the plug and spring. Accordingly, the construction of the spring-actuating mechanism is such that it will ensure that no operating handle can be left in engagement with the operating drum 21 when the device is left unattended.

A latching device is provided for retaining the spring drum 21 in a valve-open position. For this purpose, a pair of rollers 38 are mounted to drum 21 upon mounting pin 39.

The latching means and a triggering mechanism therefor are mounted to a pilot body 50 which is in the form of a saddle and held in place upon a prepared external surface 51 of the valve body 12 by a clamp plate 52 attached thereto by cap screws 53. Pilot body 50 is provided with a bore 54 that is substantially perpendicular to the axis of inlet passage 14 of valve body 12. Referring to FIG. 2, bore 54 is enlarged at its left end to form a cavity 55 having an internal thread 56 for receiving the threaded end of a low pressure pilot generally indicated by reference number 57. The right end of bore 54 is formed of a reduced-diameter by a neck 58 and then enlarges to form cylindrical cavities 59 and 59′. A threaded portion 60 of cavity 59′ is adapted for receiving a high pressure pilot generally indicated by reference number 61.

Low pressure pilot 57 comprises a spring housing 62 having a reduced threaded portion or nipple threadedly engaged with the threads 56 of pilot body 50. The exterior surface of housing 62 is provided with threads 63 for receiving an adjuster sleeve 64 as shown. While sleeve 64 may normally be rotated and axially adjusted along thread 63, a lock ring 65 is provided to prevent inadvertent movement thereof. Lock ring 65 is disposed in a suitable external groove on the sleeve with one end projecting through an opening therein to engage a longitudinal groove 66 formed in the housing 62. A coiled compression spring 67 is disposed within housing 62, having one end bearing against the inside of adjuster sleeve 64 and the innermost end bearing against a spring seat 68. A pilot member which is substantially disposed within the bore hole 54 and cavity 55 comprises a piston 69 and a stem 70 which projects through a bore hole formed in housing 62, said stem being engaged in a cavity of spring seat 68. A seal ring 72 is lodged between piston 69 and the inner wall of cavity 55, thereby effecting a fluid seal and preventing a loss of pressure from the bore 54. Piston 69 is formed with a reduced tubular portion extending to the right as shown in FIG. 2, and having a blind bore 73 for a purpose which is to be described.

High pressure pilot 61 is similar in many respects to low pressure pilot 67, but having one essential difference in construction of its pilot member. A housing 74, similar to housing 62, is formed with a threaded or nipple end for engaging threads 60 of cavity 59′ and an external threaded surface 75 of the housing 74 receives the internally threaded adjuster sleeve 76. A locking ring 77 is disposed within an external groove of sleeve 76 having one end extending through an opening therein and engaged with a groove 78 in the housing 74. Also similar to the low pressure pilot, a coiled compression spring 79 is disposed within body 74 having one end seated against the end of sleeve 76 and the other end bearing against a shoulder of a spring seat 80. A pilot member is slidably received within bore 54 and cavities 59 and 59′, and comprises a piston member 81 having a stem 82 projecting through a bore hole of housing 74. Stem 82 engages a cavity formed in the spring seat 80 and seal ring 83 is provided within cavity 59 to prevent a fluid leakage and loss of pressure from bore 54. The pilot member of high pressure pilot 61 further comprises a reduced-diameter portion 84 extending to the left of piston 81 and terminating with an enlargement 85 having an abrupt shoulder facing to the right as shown in FIG. 2. Enlargement 85, it will be noted, is disposed within the bore 73 of the low pressure pilot and piston 69, and the abrupt

shoulder of enlargement 85 is coplanar with the end face of piston 69.

Bore 54 of pilot body 50 fluidly communicates with the interior of valve 12 through a tubular connection 86, as shown by FIG. 1. For this purpose, the conventional valve body 12 may be suitably drilled for receiving the connection. Similarly, pilot body 50 is provided with a bore for receiving tubular connection 86. Accordingly, the fluid pressure in inlet passage 14 of valve 11 is transmitted through the tubular connection 86 and then into bore 54.

Referring to FIG. 2, it will be evident that the pressure in chamber 54 acts across the area of low pressure piston 69, biasing the pilot to the left, while spring 67 biases the piston to the right. Sleeve 64 is screwed to the left or right to provide the desired compression in the spring. Thus, the load of spring 67 can be adjusted to offset a range of pressures in chamber 54, and when the pressure in chamber 54 falls below that for which the low pressure pilot 57 has been adjusted, spring 67 will move piston 69 to the right, contacting and pivoting a control finger 87, the purpose and operation of which will be further described.

The pressure in chamber 54 normally maintains the piston 69 against surface 62*a* of housing 62. Under abnormally low pressure conditions, piston 59 moves to the right but its movement is arrested when spring seat 68 engages the inner end wall 62*b* of housing 62.

It will be evident that the high pressure pilot 61 is operated in a substantially similar manner, piston 81 normally being held in its leftmost position as shown by the bias of spring 79 which acts in opposition to the pressure within bore 54, said pressure acting across the area of the pilot which is sealed by ring 83. In the normal position, spring seat 80 is placed into contact with the inner end 74*a* of housing 74 and under abnormally high pressure conditions piston 81 will engage surface 74*b*.

Assuming normal flow and pressure conditions within valve 11, the pressure within bore 54 is to be regarded as normal and within a range maintaining both pistons 69 and 81 in their positions as shown in FIG. 2. Should the pressure within valve 11 and bore 54 become either too high or too low, control finger 87 will be pivoted by that pilot which responds to the abnormal pressure condition.

Thus, it has been shown that valve 11 is provided with high and low pressure pilots 57 and 61, respectively, having pilot members which communicate with a pressure chamber defined by bore 54; that bore 54 in turn communicates with the interior of valve 11 by means of a fluid passageway including connector member 86; and that when the pressure within the bore 54 rises above or falls below the predetermined range of pressures permitted by the pilots 57 and 61, one of said pilots will pivot the control finger 87.

Referring to FIGS. 1 and 2, pilot body 50 is further provided with a threaded bore 90 that communicates with chamber 54, but is filled with a mounting plug 91 and a seal 89, said plug having an off-center passageway 92 for receiving a trigger spindle 93. The upper end of bore 92 is enlarged for receiving a seal 94 and a bearing 95.

Referring to FIGS. 3 and 3*a*, the upper end of trigger spindle 93 is provided with a control head 96, while trigger finger 87 is mounted to its lower end, being telescoped over the spindle and secured thereto by a set screw.

Referring to FIG. 2, it will be noted that either of the pistons 69 or 81 can move toward the right without disturbing the other, for although the enlarged end 85 is telescoped within the blind recess 73, the pilots are independent each from the other. When either of the pistons moves to the right, control finger 87 will be pivoted and the trigger spindle 93 rotated in a clockwise direction. Corresponding rotation of control head 96 will effect a release of the latch mechanism that retains spring drum 21 in a wound condition.

Control head 96 comprises axially adjacent portions 97 and 98. Portion 97 is formed with a notched recess 99 that is engaged by a sliding plate 100. Portion 97 is also formed with a shoulder 101 and a planar surface 102. Portion 98 is shaped with a cylindrical control surface 103, an angular recess 104 and a cam surface 105.

With the shape of head 96 in mind, the manner of its operation will now be explained in connection with a latching mechanism. Referring to FIGS. 3–9, the latching means for securing spring drum 21 in a wound condition comprises a latch finger 106 having an elongated roller contact surface 107 and a lip 108 engageable with surface 103 and recess 104. Latch finger 106 is supported on axially aligned pivot studs 109 and 110, respectively received within recesses of a cover plate 111 and pilot body 50, said cover plate being secured to body 50 by means of screws 88.

The latching means further comprises a latch plate 112 provided with an integral pivot stud 113 and mounted from latch finger 106. Plate 112 is formed with a slotted opening 114 through which projects a shaft 115 having a guide surface 116 engageable with the surfaces of slot 114 for controlling movements of plate 112. A rectangular finger 117 is secured to the lower end of shaft 115 and is pivotally movable therewith. Shaft 115 is supported from the cover plate 111 and possesses a knurled gripping member 118 secured at its upper end by a pin 119.

Latch plate 112 is provided with a foot 120 engaged by one end of a coiled tension spring 121, the other end of said spring being engaged with a foot 122 provided on plate 100, said plate being slidably received within slots 123 and 124 which are formed by the confining surfaces of pilot body 50 and cover plate 111. An edge 125 of plate 100, it will be noted, engages the notch 99 formed on portion 97 of control head 96.

Referring to FIGS. 6 and 8, a spring biased detent 126 is pivotally mounted on plate 112 by a pin 127. A coil spring 128 having one end secured in an opening of detent 126 and the other end engaged by a slot of pin 127 resiliently biases the detent into abutting engagement with the surface of member 117 when the control mechanism occupies a position as shown in FIGS. 5 and 6. However, when the control head 96 is rotated, triggering a release of latch finger 106, cam surface 105 pivots the detent into the positions shown in FIGS. 7 and 8.

Refering to FIG. 5, it will be noted that plate 112 has a lip 129 disposed in the pathway of a shoulder 130 of spring drum 21. Moreover, it will be seen that a rotation of drum 21 against the bias of spring 26 will eventually bring the shoulder 130 into engagement with the lip 129, and at a time that the roller members 38 have been moved past the latching surfaces 107 of latch finger 106.

The operation of the above described valve operating mechanism will now be explained:

We may assume that valve 11 has been opened as shown in FIG. 1 and that normal pressures are existent within the flow line and pasages 14, 15 and 16. Under such conditions, latch finger 106 will engage the rollers 38, retaining the spring drum 21 and valve element 13 in the positions shown. The control mechanism, including trigger head 96, will be positioned as shown in FIGS. 5 and 6 with the surface 103 moved beneath the lip 108 of latch finger 106. Control head 96 is at this time biased into position by the spring 121, the force thereof being transmitted through sliding plate 100. Control head 96 is rotated by spring 121 until the end of control finger 87 contacts coplanar surfaces of the pilot members 69 and 81, member 69 being bottomed against surface 62*a* of housing 62 and spring seat 80 contacting surface 74*a* of housing 74. Although spring 121 tends to move plate 112, such movement is inhibited by the pivotal connection of that plate with latch finger 106 which is being held in a latching position.

In the event that either a high or low pressure condition should develop within the flow line, and within the flow passages of valve **11**, such a condition would move one of the pilots **69** or **81**, causing the control head **96** to be rotated. A sufficient rotative movement of control head **96** such as to pass surface **103** from behind lip **108** of latch finger **106** permits the force of spring **121** acting upon plate **112** to pivot the latch finger into the position shown in FIGS. 7 and 8. It will be noted that detent **126** is at this time pivoted against the bias imposed by spring **127** and is moved away from member **117**.

From the above, it will be evident that a rotation of control head **96** triggers a pivotal movement of latch finger **106**, causing the surface **107** to be moved from engagement with the rollers **38** of spring drum **21**. Spring drum **21**, together with valve element **13**, is immediately rotated by the power of coil spring **26** and the rotative movement is arrested by the engagement between the lugs **29** and **30** and the ends of grooves **31** and **32**.

After the difficulty which produced the low or high pressure condition has been remedied, valve **11** is manually reopened by winding the spring drum **21** in opposition to the force of spring **26**.

Referring to FIGS. 5, 6 and 9, it will be noted that the latch mechanism may be reset although the pressure wthin the flow line is not yet within the normal control limits imposed by the high and low pressure pilots. Upon rotating spring drum **21** against the force of spring **26** to reopen valve **11**, shoulder **130** comes into engagement with lip **129** of plate **112**, and a small amount of additional rotative movement will reset latch plate **112** and latch finger **106** while simultaneously withdrawing detent **126** from engagement with shoulder **105** of control head **96**. Spring **127** will now snap detent **126** into abutment with member **117**. If the control head **96** has not yet been returned to the position it occupies during normal pressure conditions, a release of spring drum **21** and a disengagement between lip **129** with shoulder **130** permits spring **121** to move latch plate **112** until contact is made between the end of detent **126** and the surface **103** of control head **96**. Such an engagement is made while the surface **107** of latch finger **106** occupies a position well in back of rollers **38** as shown in FIG. 9. Now, upon the re-establishment of a normal pressure in the flow line and consequently a return movement of pilot **57** or **61** to a normal pressure condition as shown in FIG. 2, trigger spindle **93** and control head **96** are returned to their starting position by the biasing force of spring **121**, said control head then occupying the positions as shown in FIGS. 5 and 6. It will be evident that the end surface of detent **126** moves out from engagement with the surface **103** only after the surface **103** comes under the lip **108** of latch finger **106**. When this occurs, detent **126** moves slightly forward together with plate **112** under the force of spring **121** until a binding engagement is made between the lip **108** and the surface **103**. At this time, the control and latching mechanism has been fully reset to the positions of FIGS. 5 and 6.

In the event that it is desirable that valve **11** should be closed, as for example for testing purposes or for working on the flow line which it controls, such an effect may be produced by pivoting the member **117** through manual rotation of the knurled knob **118**. Importantly, the manual control permitted by pivotal movement of member **117** will effect a release of the latching mechanism, irrespective of the condition and position of control head **96**.

Referring to FIGS. 5 and 6, and assuming normal pressure conditions within the flow line and valve **11**, control head **96** may be pivoted as though acted upon by one of its pilots and against the force of spring **121** by

pivoting member **117** in a counterclockwise direction, bringing said member against surface **101** of control head portion **97** and moving the control head **96** until surface **103** clears the lip **108** of latch finger **106**. After such movement, of course, spring **121** will move latch plate **112** and latch finger **106** into the roller-releasing positions shown in FIGS. 7 and 8. Detent **126** is simultaneously pivoted against its spring bias by contact with surface **105** of the control head.

In the event that the latch mechanism has been reset with pressure conditions in the valves still abnormal, a pivotal movement of member **117** will nevertheless effect a release of the latching mechanism. A pivotal movement of member **117** will move the end of detent **126** across the surface **103** of control head **96** until said detent clears the end of said surface and permits spring **121** to move latch plate **112** and latch finger **106** into releasing positions.

If desirable, the valve operating mechanism described can be used and operated by a pressure control line forming a part of an instrument air line network. If this is desirable, the fluid connector **86** extending between chamber **54** and the interior of valve **11** may be eliminated, and the passageway formed thereby may be plugged. Pressure would then be applied to chamber **54** through the passageway **140** after first removing a plug **141** and making suitable connections with the desired instrument air system. Of course, the operation of the valve mechanism would be unchanged.

In view of the above description, it should be apparent that various changes may be made in the size, shape and arrangement of certain parts without departing from the spirit of this invention or the scope of the attached claims, and each of such changes is contemplated.

Having thus described my invention, what I claim and desire to secure by Letters Patent is:

1. Apparatus comprising in combination: a valve having a valve element movable between open and closed positions of operation, means for biasing said valve element into one of said positions of operation, means for latching said valve element in opposition to said biasing means and while said valve element is in the other of said positions of operation, means for urging said latching means toward a releasing position, means defining a fluid-pressure chamber, a pressure-responsive pilot disposed partly within said chamber and movably operated by the fluid pressure therewithin, and control means actuated by said pressure-responsive pilot for retaining said latching means in a latching position under normal pressure conditions but allowing movement of said latching means into a releasing position when abnormal pressures are applied to said fluid-pressure chamber; said latching means comprising a pivotally mounted latch finger movable between latching and releasing positions, and a latch finger control member pivoted to said latch finger; said control means comprising a pivotally mounted control finger in contact with said pressure responsive pilot, and a control head pivotally operated by said control finger and having surface engagements for contacting said latch finger; said means for urging said latching means toward a releasing position comprising a tension spring connected intermediate said latch finger control member and said control means, said tension spring resiliently urging said control finger in opposition to said pilot.

2. The apparatus of claim **1** and further comprising a spring-biased detent pivoted upon said latch finger control member and engageable with said control means for retaining said latch finger in a latching position although said control means occupies a position permitting movement of said latching means into a releasing position.

3. The apparatus of claim **2** and further comprising a manually operated member engageable with said detent for pivotally moving it out of engagement with said control means to permit a release of said latching means.

4. The apparatus of claim 2 and further comprising a manually operated member engageable with said detent and said control means to permit a release of said latching means.

5. The apparatus of claim 1 and further comprising a manually operated member engageable with said control means for pivoting said control head in aid of said pressure-responsive pilot to permit a release of said latching means.

6. The apparatus of claim 1 and further comprising a second pressure-responsive pilot disposed partly within said fluid-pressure chamber and movably operated by the fluid pressure therewithin, said pressure-responsive pilots having contact members movable in opposite directions under abnormal high and low fluid pressures within said fluid-pressure chamber, the contact member of one pilot being engageable with said control finger under low pressure conditions and the contact member of the other pilot being engageable with said control finger under high pressure conditions.

7. The apparatus of claim 6 wherein the contact members of said pressure-responsive pilots engage said control finger from a common side for pivoting the control finger in the same direction under abnormal high and low pressure conditions.

8. The apparatus of claim 7 wherein the contact members of said pressure-responsive pilots are separately biased in opposite directions by a pair of compression springs, the contact member of the high pressure pilot being urged away from said control finger by one spring and the contact member of the low pressure pilot being urged toward said control finger by the other spring.

9. The apparatus of claim 8 and further including means for independently adjusting the compression forces stored by said pair of springs under normal pressures within said fluid-pressure chamber.

References Cited by the Examiner

UNITED STATES PATENTS

1,922,705	8/1933	McAllister	137—458 X
2,327,055	8/1943	McMahon	137—458

FOREIGN PATENTS

738,582	10/1955	Great Britain.

WILLIAM F. O'DEA, *Primary Examiner.*

I. WEIL, D. A. ROWE, H. W. WEAKLEY,
Assistant Examiners.