May 10, 1949. F. J. SKROB 2,469,525

DENTAL CEMENT APPARATUS

Filed July 15, 1946 2 Sheets-Sheet 1

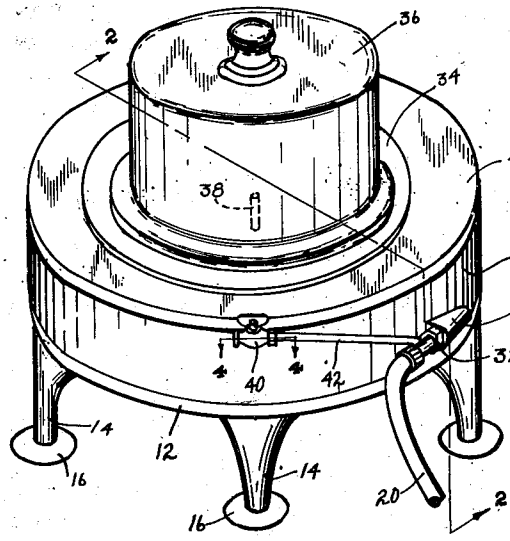

Fig. 1

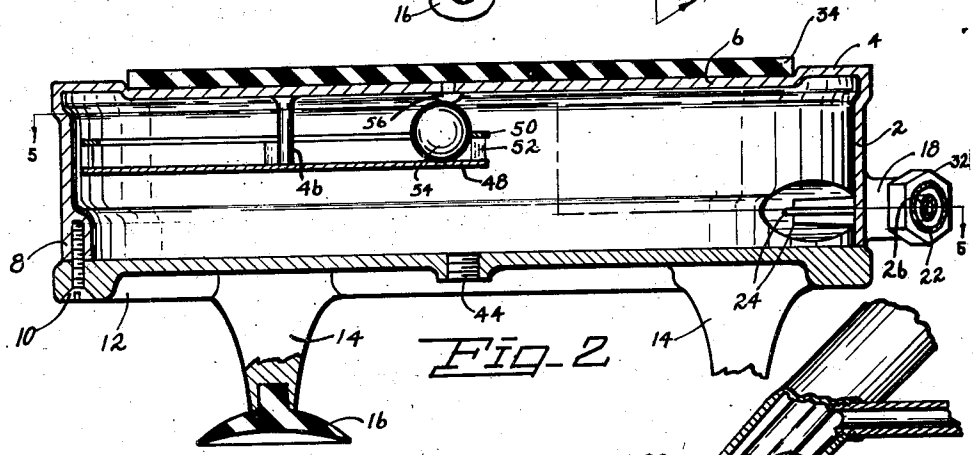

Fig. 2

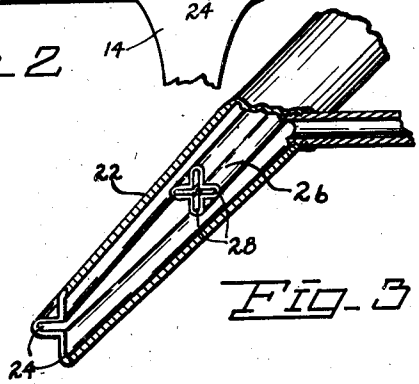

Fig. 3

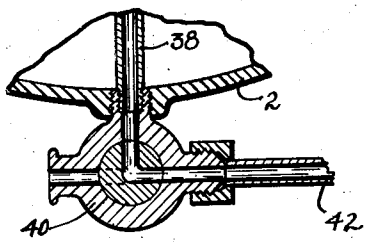

Fig. 4

INVENTOR.
Frank J. Skrob
BY
Glenn L. Gish
ATTORNEY

May 10, 1949. F. J. SKROB 2,469,525

DENTAL CEMENT APPARATUS

Filed July 15, 1946 2 Sheets-Sheet 2

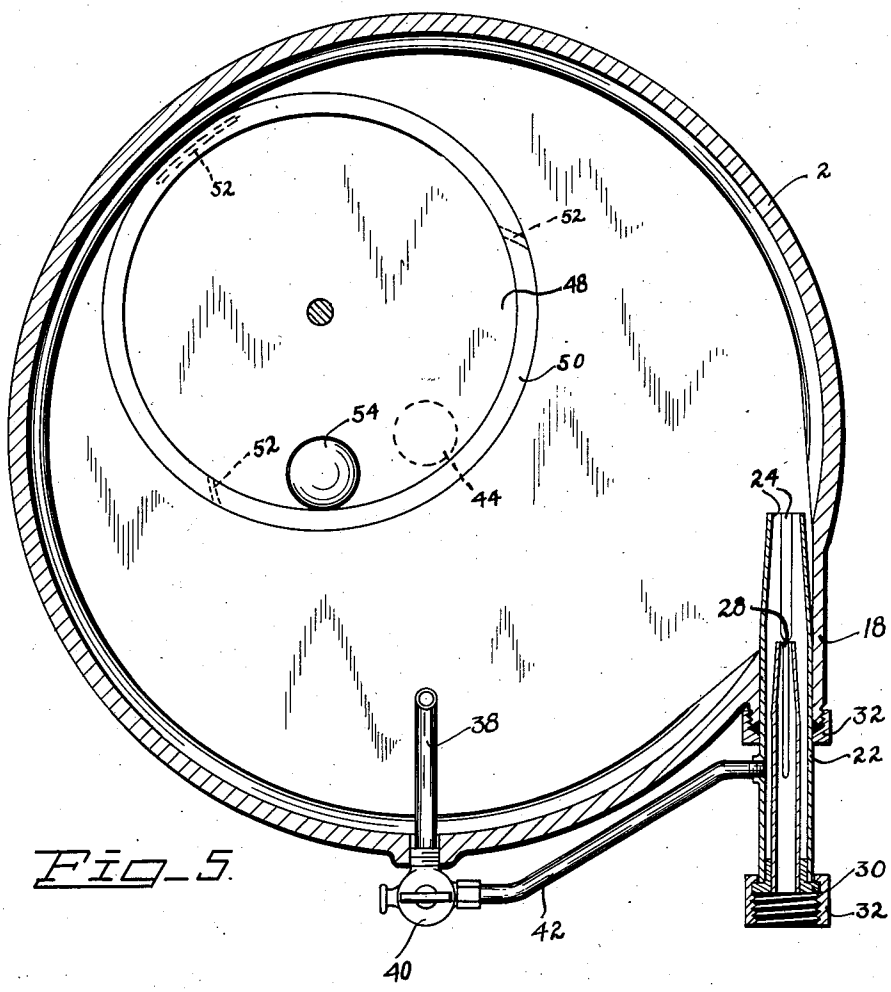

Fig. 5.

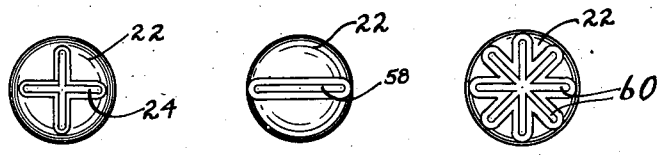

Fig. 6 = Fig. 7 = Fig. 8

INVENTOR.
Frank J. Skrob
BY
Glenn L. Fisk
ATTORNEY

Patented May 10, 1949 2,469,525

UNITED STATES PATENT OFFICE

2,469,525

DENTAL CEMENT APPARATUS

Frank J. Skrob, Okanogan, Wash.

Application July 15, 1946, Serial No. 683,689

6 Claims. (Cl. 259—72)

1

My present invention relates to an improved dental cement apparatus and more particularly to the novel and unique arrangements of parts wherein the mixed cement used for casting crowns and inlays in dental work may be subjected to a vacuum to remove all air from the mixture and in addition the mixture will be subjected to vibration. Specifically, water under pressure is utilized to effect a reduction in air pressure in a chamber, and the water pressure also effects the vibrations.

In the accompanying drawings I have illustrated one complete example of the physical embodiment of my invention according to the best made I have thus far devised, but it will be understood that various changes and alterations may be made in the exemplified structure within the scope of the appended claims.

In the drawings—

Figure 1 is a perspective view of the complete unit of my invention.

Figure 2 is a vertical sectional view of line 2—2 of Figure 1.

Figure 3 is a fragmentary view in perspective of the water jet.

Figure 4 is a horizontal sectional view of the valve at line 4—4 of Figure 1.

Figure 5 is a horizontal sectional view at line 5—5 of Figure 2; and

Figures 6, 7 and 8 are end elevational views of various jet forms.

Referring now to the drawings wherein like characters indicate like parts, I have illustrated the present embodiment of my invention as comprising a drum casing 2, closed at 4; the closure wall having an offset or depressed portion 6. The edge of the drum casing is thickened at 8 to receive bolts 10 securing the casing to the base 12 mounted upon legs 14 fashioned with rubber suction cup feet 16.

Tangentially of the drum casing 2, I provide an inlet coupling 18 for connection with a source of water under pressure as 20, and within this coupling is a jet tube 22 constructed at its outlet end into cruciform passages 24. A smaller tube 26 is spaced within the tube 22 constructed at its end into cruciform passages 28. A flanged collar 30 secures the tube in position, with relation to each other and the ring 32 suitably packed secures the tube 22 in the coupling 18.

In the depressed closure wall 4 of the casing 2 I place a resilient pad 34 preferably of soft rubber and upon this pad I mount a bell cover 36 which confines therein the cement mixture to be subjected to vacuum and vibration.

2

A pipe 38 extends into the casing through the side wall thereof with its inner end portion directed upwardly through the top or cover wall 4 and the pad 34 this pipe serving as an exhaust port for removing air from the bell. This pipe is connected with the shut off valve 40 on the drum wall 2, and the pipe 42 connects the valve with the tube 22 and communicates with the space about the inner tube 26.

As water under pressure is injected through tube 26 and tube 22 the water is forced into a pattern similar to the cruciform end passages 28 and 24, and creates a suction through the pipes 38 and 42 for removing the air from the bell 36 and thus from the cement mixture. The water entering the drum tangentially swirls around the periphery thereof and the water surface will be concave similar to a whirlpool due to centrifugal force. A drain 44 permits excess water to be removed.

As the injected water is swirling about the interior of the drum and suction through pipes 42 and 38 is creating the vacuum in the bell, the water is also effecting a vibration of the drum closure wall 4 and the pad 34 by mechanism now to be described.

A support 46 depending from the wall 4 carries a circular raceway 48 having a ring 50 supported by tangential posts 52 and a ball 54 is moved circumferentially of the ring, under pressure of the swirling water. As the ball revolves about the center of the raceway it will abut the lug 56 secured through the cover in the path of the ball and each abutment thereof will vibrate the cover 4, the pad 34, and the container of cement mixture on the pad and in the bell 36.

Thus the cement will be simultaneously subjected to vacuum pressure and to vibration, and the crown or inlay will, when set, be free of air pockets and will be fully vibrated and jostled into a homogeneous body.

In Figures 7 and 8, I have shown other forms of jet tubes 22 wherein in Figure 7 the outlet comprises one flattened passage 58, and in Figure 8 a multiplicity of radial passages 60.

Having thus fully described my invention, what I claim as new and desire to secure by Letters Patent is:

1. The combination with a closed drum, of water injections means located tangentially of the drum for creating a whirling mass of water in the drum and including spaced jet tubes one within the other, a bell jar on the top of the drum, means forming a communicating passage between the jar and the outer tube whereby the

force of water passing through the tubes will exhaust air from the bell, and means responsive to the movement of water swirling within the drum for vibrating the top of the drum.

2. The combination with a closed drum, of water injection means located tangentially of the drum for creating a mass of swirling water in the drum and including spaced jet tubes having cruciform outlet passages one within the other, a bell jar resting on the top of the drum, means forming a communicating passage between the jar and the outer tube whereby the force of water passing through the tubes will exhaust air from the bell, and means responsive to the movement of water swirling within the drum for vibrating the top of the drum.

3. The combination with a closed drum, of water injection means located tangentially of the drum for creating a mass of swirling water in the drum and including spaced jet tubes having radial outlet passages onewithin the other, a bell jar on the drum, means forming a communication passage between the jar and the outer tube whereby the force of water passing through the tubes will exhaust air from the bell, and means responsive to the action of swirling water within the drum for vibrating the drum.

4. The combination with a closed drum, of water injection means located tangentially of the drum for creating a mass of swirling water in the drum and including spaced jet tubes located one within the other, a bell jar on the drum, valved means forming a communicating passage between the jar and the outer tube whereby the force of water flowing through the tubes will exhaust air from the bell, and means responsive to water swirling within the drum for vibrating the drum.

5. The combination with a closed drum, of water injection means located tangentially of the drum for creating a mass of swirling water in the drum, a jar mounted on the top of the drum, a ball and circular race therefor mounted horizontally in the drum in the path of swirling injected water, and a lug carried by the top of the drum in the path of the moving ball on the drum effecting a vibration of the top of the drum and the jar upon contact of the ball with the lug.

6. The combination with a closed drum having a centrally depressed upper wall, and a resilient pad in the depression of said upper wall, and a resilient pad in the depression of said upper wall; of water injection means located tangentially of the drum for creating a mass of swirling water in the drum; a bell jar on the resting on the resilient pad, a ball, a circular race for the ball mounted horizontally in the drum in the path of injected swirling water, and a lug projecting downwardly from said upper wall in the path of the revolving ball effecting a vibration of the top of the drum and the jar upon contact of the said ball with the lug.

FRANK J. SKROB.

REFERENCES CITED

The following references are of record in the file of this patent:

UNITED STATES PATENTS

Number	Name	Date
1,747,314	Mumford	Feb. 18, 1930
2,142,237	Canady	Jan. 3, 1939
2,183,763	Brown	Dec. 19, 1939
2,344,754	Vang	Mar. 21, 1944