(No Model.)

# E. DIETZ.

## CORNER STRUCTURE FOR TRUCKS.

No. 480,716. Patented Aug. 16, 1892.

Fig. 1.

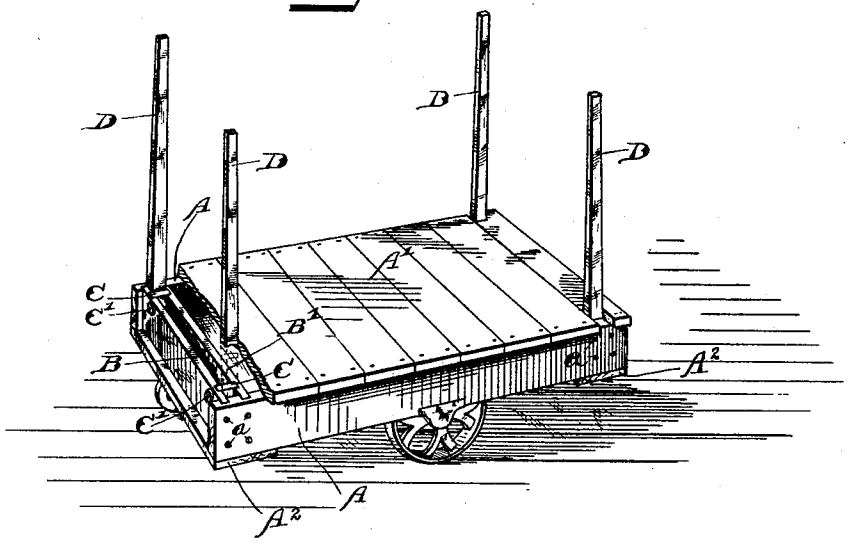


Fig. 2.

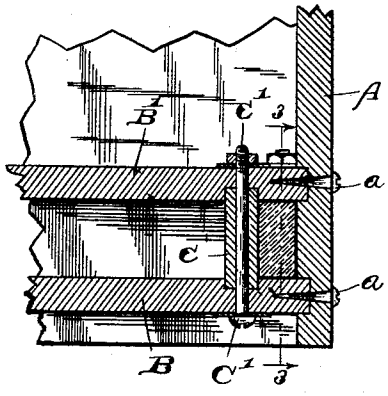


Fig. 3.

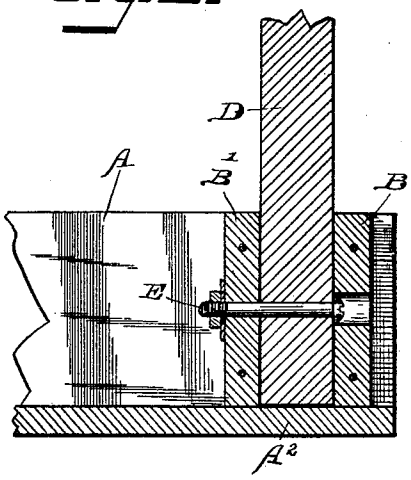


WITNESSES:

F. W. Warner

J. A. Walsh

INVENTOR

Emil Dietz.

per

C. & E. W. Bradford,

ATTORNEYS.

THE NORRIS PETERS CO., PHOTO-LITHO., WASHINGTON, D. C.

# UNITED STATES PATENT OFFICE.

EMIL DIETZ, OF INDIANAPOLIS, INDIANA.

## CORNER STRUCTURE FOR TRUCKS.

SPECIFICATION forming part of Letters Patent No. 480,716, dated August 16, 1892.

Application filed April 9, 1892. Serial No. 428,438. (No model.)

*To all whom it may concern:*

Be it known that I, EMIL DIETZ, a citizen of the United States, residing at Indianapolis, in the county of Marion and State of Indiana, have invented certain new and useful Improvements in Corner Structures for Trucks, of which the following is a specification.

My said invention relates to that class of trucks which are used in factories, stores, warehouses, &c., to wheel goods from one place to another; and it consists in a construction whereby the corners of such trucks are formed to receive the stakes or posts and hold them in a very secure manner without the use of corner-irons where such have usually been employed, as will be hereinafter more particularly described and claimed.

Referring to the accompanying drawings, which are made a part hereof, and on which similar letters of reference indicate similar parts, Figure 1 is a perspective view of a truck embodying my said invention with a portion of the flooring broken away to show the end construction and a portion of one of the posts also broken away; Fig. 2, a horizontal sectional view through one of the corners; and Fig. 3 a vertical sectional view looking toward the right from the dotted line 3 3 in Fig. 2, illustrating the method of securing the posts by means of supplemental bolts.

In said drawings the portions marked A represent the sides of the truck-frame; B B′, the two parts, respectively, of the ends of said frame; C, cross-pieces secured in grooves or gains in said two parts; D, the stakes or posts, and E supplemental bolts occasionally used to secure the stakes in place.

The truck-frame is mounted on wheels or casters, as usual. The sides A are plain straight sides having a pair of vertical grooves or gains near each end to receive the ends of the parts B and B′. The flooring A′ is generally securely nailed onto these sides, as are also the bottom cross-bars $A^2$. The ends are composed of two parts B and B′, the ends of which enter the grooves or gains in the side pieces A. Screws *a* are usually driven through the side pieces into the ends of these end parts.

The cross-pieces C are set into vertical grooves or gains in the opposing faces of the parts B and B′ near the sides A, and, together with said sides and parts, form mortise-like recesses, into which the lower ends of the stakes or posts are to be inserted. Bolts C′ are inserted through these pieces C and the parts B and B′, as shown most plainly in Fig. 2, and hold them all firmly together. Through the medium of these bolts the strain of the posts or stakes is mainly upon the inner part B′, which, being farthest from the edge or outer portion of the truck-frame, is thus securely and strongly held in place.

The posts or stakes D are ordinary stakes or posts and are inserted in the mortise-like openings in the corners of the truck-frame formed by the sides, ends, and cross-pieces, as has already been described. They are commonly removable and replaceable at pleasure.

In trucks where the stakes are to be removed and replaced in using the truck the bolts E are not employed. When, however, it is desired that said stakes or posts shall be permanently or usually held firmly in place, these bolts are inserted. As will be observed by reference to Fig. 3, an opening large enough to receive the head of said bolt E is formed through the outer end part B, so that the head comes directly against the side of the post or stake D. The inner end of the bolt passes through the end part B′, and the washer and nut are applied on the interior side. This is so that whatever strain comes upon said bolt shall pull principally upon the part B′ instead of upon the part B.

By my invention a strong, substantial, and durable truck-frame is produced without the use of the special irons for the corners which have commonly been employed. This reduces the expense largely and the truck is not impaired. The endwise strain upon the posts or stakes comes upon the inner parts B′ through the medium of the bolts C′, while the sidewise strain is effectually met by the side pieces A, strengthened as they are by having the flooring A′ nailed strongly to them.

Having thus fully described my said invention, what I claim as new, and desire to secure by Letters Patent, is—

1. A truck-frame consisting of sides having gains or grooves therein, ends constructed of two parts entering said gains or grooves, and cross-pieces extending between the two parts of the ends, the whole forming mortise-like

recesses for the lower ends of the stakes or posts, substantially as shown and described.

2. The combination, in a truck-frame, of sides having gains or grooves therein, double end pieces entering said grooves or gains and themselves provided with corresponding grooves or gains, and the end pieces and bolts C′ passing through them and by which they are secured together, substantially as shown and described.

3. The combination, in a truck-frame having the ends each constructed of two parts, whereby a space is provided to receive the lower ends of the stakes or posts, of an opening through the outer part large enough to receive the head of the bolt, and bolts E, passing through the lower ends of the stakes and the inner parts of the ends, and thus holding said stakes to said parts, substantially as shown and described.

In witness whereof I have hereunto set my hand and seal, at Indianapolis, Indiana, this 5th day of April, A. D. 1892.

EMIL DIETZ. [L. S.]

Witnesses:
CHESTER BRADFORD,
J. A. WALSH.