Sept. 4, 1928. 1,683,093

C. B. MIRICK ET AL

PIEZO ELECTRIC CRYSTAL APPARATUS

Filed Nov. 7, 1927

FIG. 1

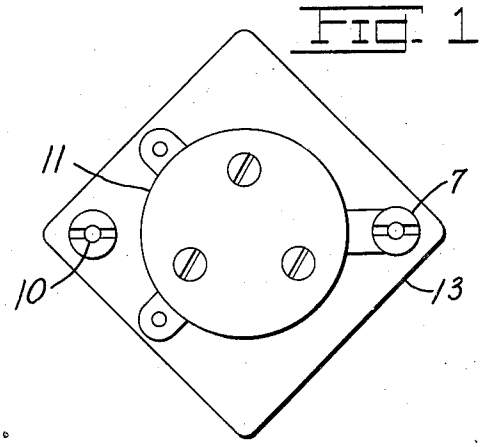

FIG. 2

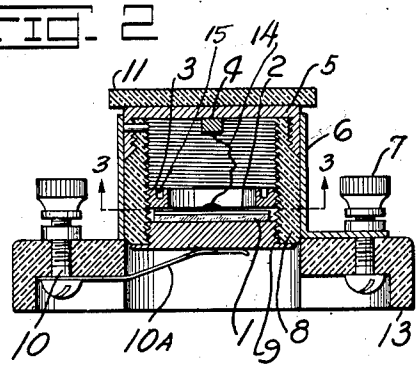

FIG. 4

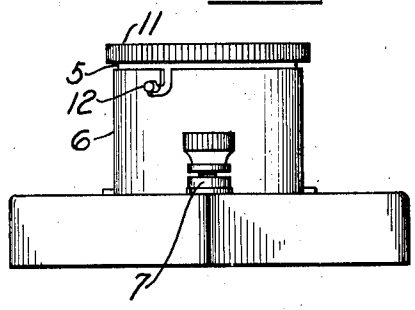

FIG. 3

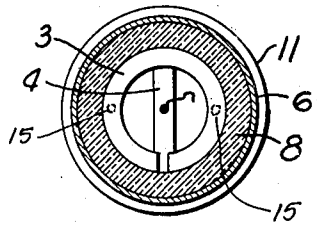

Inventor

Carlos B. Mirick
and
Alfred Crossley

By Harold Todd.

Attorney

Patented Sept. 4, 1928. 1,683,093

UNITED STATES PATENT OFFICE.

CARLOS B. MIRICK AND ALFRED CROSSLEY, OF WASHINGTON, DISTRICT OF COLUMBIA, ASSIGNORS TO WIRED RADIO, INC., OF NEW YORK, N. Y., A CORPORATION OF DELAWARE.

PIEZO-ELECTRIC CRYSTAL APPARATUS.

Application filed November 7, 1927. Serial No. 231,589.

Our invention relates broadly to piezo electric crystal apparatus and more particularly to an improved construction of piezo electric crystal holder.

One of the objects of our invention is to provide a construction of piezo electric crystal holder for mounting a piezo electric crystal element in such manner that oscillations over a broad range of frequencies may be sustained with a high degree of efficiency.

Another object of our invention is to provide a construction of piezo electric crystal holder which may be readily mounted within a socket or removed from the socket for permitting the substitution of a large number of different piezo electric crystal elements each graded for a different range of frequencies.

Still another object of our invention is to provide a simplified construction of piezo electric crystal holder having a minimum number of parts for securing maximum efficiency in operation of the piezo electric crystal apparatus.

A further object of our invention is to provide a crystal holder which is well suited to use with crystals which will oscillate at any frequency from 100 to 10,000 kilocycles and which can be made suitable for use with lower frequency crystals by enlarging the dimensions of the holder.

A still further object of our invention is to provide a construction of piezo electric crystal holder which is rugged in its construction and capable of rough usage and at the same time may be used with either power circuits or weak oscillating circuits.

Other and further objects of our invention reside in the construction of the piezo electric crystal holder as described more fully in the specification hereinafter following by reference to the accompanying drawings, in which:

Figure 1 is a plan view of the piezo electric crystal holder of our invention; Fig. 2 is a longitudinal cross-sectional view of the piezo electric crystal holder shown in Fig. 1; Fig. 3 is a lateral cross-sectional view taken through the piezo electric crystal holder on line 3—3 of Fig. 2; and Fig. 4 is a side elevation of the piezo electric crystal holder of our invention.

The crystal holder of our invention has been found to be well suited for use with crystals which oscillate at any frequency from 100 to 10,000 kilocycles and can by enlarging dimensions of holder be made suitable for use with lower frequency crystals. It is essentially a portable type of holder which is capable of rough usage, and at the same time the ability of the crystal within the holder to oscillate is assured. The crystal holder is so constructed that it can be used with either power circuits or in weak oscillating circuits.

The holder of our invention employs an insulated cylindrical housing 8 screw threaded on the interior. A metal retaining ring 3 is screw threaded into the casing 8 and limits the movement of the crystal 1 and its upper contact plate 2 and at the same time maintains the contact plate in intimate contact with the crystal. We have illustrated one form of holder and socket, but this method of mounting crystals with respect to the contact surfaces of upper and lower contact plates can be applied to any other means for housing the crystal. It could be readily applied to the holder shown in the Crossley Patent #1,572,773 of February 9, 1924.

The piezo electric crystal 1 rests in contact with the plate member 9. The upper contact plate 2 rests upon the upper surface of crystal 1. The retaining ring 3 screws down inside the insulated wall 8 to that position which permits minimum up and down motion of the upper contact plate 2 and the crystal 1. Electric connection is made to the crystal 1 through the metal cross bar 4 which has a flexible lead 14 connecting it to the upper contact plate 2 as shown, and from this bar 4 connection is made to the binding post 7 through the metal cap 5, and the metal shell or sleeve 6. Another electrical connection to the crystal is made through the metal base plate 9, the spring contractor 10_A and the binding post 10.

In this particular holder a bayonet method of retaining the holder in the socket 6 is employed. It consists essentially of the pin 12 which is made fast in the metal cap 5 and which can be pushed down and turned in the slot made in 6 as shown in Fig. 4. As a means for turning the holder in the socket 6 a knurled bakelite top piece 11 is employed.

The retaining ring 3 is shown more clearly

in Fig. 3 as a split ring. This split ring feature permits spreading of the ring 3 to provide a binding action on the wall 8 to prevent any turning motion after the ring is adjusted. The adjustment is made by use of a spanner wrench which fits into the two socket apertures 15 shown in the ring.

The piezo electric crystal holder of our invention has been found to be extremely practical in its construction, for it will be observed that the several parts of the holder are all capable of molding or turning processes and is a substantially screw machine product. The piezo electric crystal holder is of extremely small size and the capacity effects are accordingly reduced to a minimum, permitting the energy derived from the piezo electric crystal element to be the controlling factor in sustaining oscillations of the frequency of the piezo electric crystal elements.

The piezo electric crystal element may be hermetically sealed within the piezo electric crystal holder and suitable wax or metal seals may extend through both the upper and lower end caps to serve as indicators to show whether or not the holder has been opened.

While we have described our invention in a preferred embodiment, we desire that it be understood that modifications may be made and that no limitations are intended other than are imposed by the scope of the appended claims.

What we claim as new and desire to secure by Letters Patent of the United States is as follows:

1. A piezo electric crystal holder comprising a cylindrical casing screw threaded on the interior thereof, a metallic plug screw threaded into one end of said casing, a metallic cap screw threaded onto the opposite end of said casing, a piezo electric crystal element carried by the interior surface of the plug in said casing, a contact plate resting on the upper surface of said piezo electric crystal element, and a ring member screw threaded into said casing and controlling the position of said plate with respect to said piezo electric crystal element.

2. A piezo electric crystal holder comprising an insulated housing screw threaded on the interior thereof, a metallic plug engaging one end of said insulated housing, a metallic cap engaging the opposite end of said screw threaded housing, a piezo electric crystal element having its lower surface resting in contact with the said metallic plug, a conductive plate member touching the surface of said piezo electric crystal element, and a split ring member screw threaded into the interior of said insulated housing for limiting the movement of said conductive plate member with respect to said piezo electric crystal element.

3. A piezo electric crystal apparatus comprising a cylindrical structure arranged to be mounted into a socket receptacle, said apparatus comprising a cylindrical insulated housing screw threaded on the interior thereof, a metallic cap member screw threaded over one end of said housing, a metallic plug member screw threaded into the interior of said housing, a piezo electric crystal element having its lower surface resting in contact with the surface of said metallic plug member, a conductive plate member resting in contact with the upper surface of said piezo electric crystal element, and a split ring member engaging the screw threads on the interior of said housing, for limiting the movement of said conductive plate member with respect to said piezo electric crystal element.

4. A piezo electric crystal apparatus comprising an insulated cylindrical casing screw threaded on the interior thereof, a metallic plug in one end of said casing, a metallic cap screw threaded over the opposite end of said casing, a piezo electric crystal having its lower surface arranged in contact with said metallic plug, a conductive plate member resting in contact with the upper surface of said piezo electric crystal element, a split ring member engaging the interior screw threads in said casing, for locating said conductive plate member with respect to said piezo electric crystal element, and a metallic bar extending diametrically across said casing and in contact with the cap at the upper end thereof and electrically connected with the conductive plate member resting in contact with the upper surface of said piezo electric crystal element.

In testimony whereof we affix our signatures.

CARLOS B. MIRICK.
ALFRED CROSSLEY.