(12) INTERNATIONAL APPLICATION PUBLISHED UNDER THE PATENT COOPERATION TREATY (PCT)

(19) World Intellectual Property Organization
International Bureau

(43) International Publication Date
15 February 2024 (15.02.2024)

WIPO | PCT

(10) International Publication Number
WO 2024/035262 A1

(51) International Patent Classification:
E21B 34/06 (2006.01) *F16K 31/02* (2006.01)
E21B 43/12 (2006.01) *F16K 31/08* (2006.01)

(21) International Application Number:
PCT/NO2023/060025

(22) International Filing Date:
26 July 2023 (26.07.2023)

(25) Filing Language: English

(26) Publication Language: English

(30) Priority Data:
2211846.7 12 August 2022 (12.08.2022) GB

(71) Applicant: **EQUINOR ENERGY AS** [NO/NO]; Forusbeen 50, 4035 Stavanger (NO).

(72) Inventors: **KJØSNES, Ivar**; Oskar Braathens vei 25, 7024 Trondheim (NO). **BUGTEN, Bjarne**; Tor Sakseratters vei 2, 7562 Saksvik (NO).

(74) Agent: **BRANDERHORST, Matthijs**; Marks & Clerk LLP, 2nd Floor, Wytham Court, 11 West Way, Oxford OX2 0JB (GB).

(81) Designated States *(unless otherwise indicated, for every kind of national protection available)*: AE, AG, AL, AM, AO, AT, AU, AZ, BA, BB, BG, BH, BN, BR, BW, BY, BZ, CA, CH, CL, CN, CO, CR, CU, CV, CZ, DE, DJ, DK, DM, DO, DZ, EC, EE, EG, ES, FI, GB, GD, GE, GH, GM, GT, HN, HR, HU, ID, IL, IN, IQ, IR, IS, IT, JM, JO, JP, KE, KG, KH, KN, KP, KR, KW, KZ, LA, LC, LK, LR, LS, LU, LY, MA, MD, MG, MK, MN, MU, MW, MX, MY, MZ, NA, NG, NI, NO, NZ, OM, PA, PE, PG, PH, PL, PT, QA, RO, RS, RU, RW, SA, SC, SD, SE, SG, SK, SL, ST, SV, SY, TH, TJ, TM, TN, TR, TT, TZ, UA, UG, US, UZ, VC, VN, WS, ZA, ZM, ZW.

(84) Designated States *(unless otherwise indicated, for every kind of regional protection available)*: ARIPO (BW, CV, GH, GM, KE, LR, LS, MW, MZ, NA, RW, SC, SD, SL, ST, SZ, TZ, UG, ZM, ZW), Eurasian (AM, AZ, BY, KG, KZ, RU, TJ, TM), European (AL, AT, BE, BG, CH, CY, CZ, DE, DK, EE, ES, FI, FR, GB, GR, HR, HU, IE, IS, IT, LT, LU, LV, MC, ME, MK, MT, NL, NO, PL, PT, RO, RS, SE, SI, SK, SM, TR), OAPI (BF, BJ, CF, CG, CI, CM, GA, GN, GQ, GW, KM, ML, MR, NE, SN, TD, TG).

Published:
— *with international search report (Art. 21(3))*
— *in black and white; the international application as filed contained color or greyscale and is available for download from PATENTSCOPE*

(54) Title: IMPROVED INFLOW CONTROL DEVICE

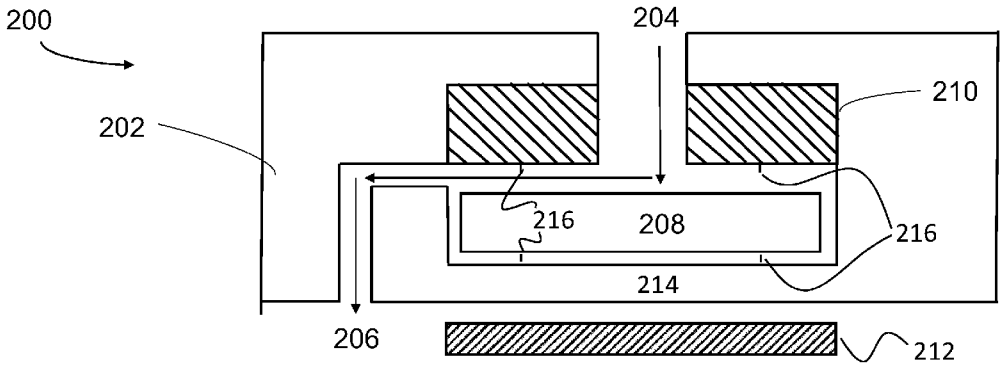

FIG. 2A

(57) **Abstract:** A wireline mobile controller, arranged to open or close an inflow control device installed in a well, the mobile controller comprising: a first connector for electrically connecting the mobile controller to a wireline, and a second connector for mechanically connecting the mobile controller to the wireline; an electrical component, arranged to couple electromagnetically to the inflow control device when the electrical component is electrically energised, and to open or close the inflow control device remotely.

WO 2024/035262 A1

Improved Inflow Control Device

The present invention relates to hydrocarbon production systems, and more specifically to an inflow control device, method and assembly used in a well system, a smart well system, or an advanced well system.

Background

In an effort to improve the production and recovery of oil and gas reservoirs, well completion methods and systems have become increasingly complex over recent years. Conventional vertical wells are being replaced with horizontal and/or multilateral wells with greater well reservoir contact. Whilst such structures can enjoy an improvement in production efficiency, they are also more costly and complicated to drill and install. After installation, variations in reservoir pressure and/or the well-known “heel-toe” effect can cause non-uniform inflow along the well, which can result in early gas and/or water breakthrough. As such, these complicated well structures cannot be efficiently controlled via a surface wellhead choke. Instead, inflow is controlled downhole.

A number of different inflow-restriction systems have been proposed in the background art. These can be categorised broadly into three categories: passive, active and reactive.

In a passive system, inflow control devices (ICD) are used to restrict inflow to differing degrees along a producing interval in a well. ICDs comprise nozzles or channels, which restrict the flow of fluid. The degree of restriction is sometimes known as the ICD “strength”. There are various different types of ICD, including nozzle, orifice, helical and labyrinth. The basic working principle is to vary the strength of each ICD along the base string in such a way as to produce a more uniform inflow. The strength of the ICD is set by the geometry and dimension of the fluid channel and is therefore fixed after installation. The resulting system is passive and unable to adapt to dynamic changes. These fluid channels, and therefore the ICDs, cannot be closed.

In a reactive system, autonomous inflow control devices (AICD) or autonomous inflow control valves (AICV) are used, which are able to self-adjust to restrict unwanted fluid flows, depending on the viscosity and density of the reservoir fluid. AICD/AICV-based

systems can be designed to reduce/prevent the flow of water and/or gas and increase/allow the flow of oil.

US9376892 discloses an actuation device comprising a housing comprising one or more ports, a magnetic valve component, and a central flowbore. The central flowbore is configured to receive a disposable member configured to emit a magnetic field, and the magnetic valve component is configured to radially shift from a first position to a second position in response to interacting with the magnetic field.

In an active system, the well completion structure is divided into zones using packers and the inflow of each zone is controlled using an inflow control valve (ICV).

Summary

According to a first aspect of the invention, there is provided a wireline mobile controller, arranged to open or close an inflow control device installed in a well, the mobile controller comprising: a first connector for electrically connecting the mobile controller to a wireline, and a second connector for mechanically connecting the mobile controller to the wireline; an electrical component, arranged to couple electromagnetically to the inflow control device when the electrical component is electrically energised, and to open or close the inflow control device remotely.

The electrical component may comprise two electromagnets, arranged substantially co-axially around a core, and, in use, arranged to generate two corresponding magnetic fields with opposite polarities. The two electromagnets may be arranged along a longitudinal axis, and the longitudinal axis substantially may coincide with the main axis of a bore of the well in use.

Centralisers can be provided for centralising the mobile controller within the well.

Instead, or in addition to, the pair of electromagnets, the electrical component may comprise an electromagnetic transmitter, arranged to emit an electromagnetic pulse, and an electronic circuit to send an electronic signal to the transmitter for emitting the electromagnetic pulse. The electromagnetic transmitter and the electronic circuit may be arranged to generate at least two electromagnetic pulses, wherein a first

electromagnetic pulse has a different frequency than a second electromagnetic pulse. One of the pulses can be used to open the inflow control device, while the other one of the pulses can be used to close the inflow control device.

According to a second aspect of the invention, there is provided an inflow control device, suitable for use with the mobile controller of the first aspect, wherein the electronic inflow control device is configured to switch between an open and a closed state, the inflow control device comprising: an inlet for fluid entry; an outlet for fluid exit; a housing; a first body and second body arranged within the housing, wherein the second body is moveable relative to the first body, wherein in an electrically energised state, the first body is operative to magnetically attract or repel the second body; wherein, in the open state, the first and second body are located at respective open positions and define a continuous fluid path within the housing, through which fluid can flow from the inlet to the outlet; wherein, in the closed state, the first and second body are located at respective closed positions, thereby blocking said continuous fluid path.

The first body may comprise an electromagnet, and the second body may comprise a permanent magnet, the permanent magnet being controllable with the mobile controller, and the housing may comprise one or more portions of a magnetic material, arranged adjacent the permanent magnet in the open or closed state.

Spacers may be provided for avoiding a direct contact between the permanent magnet and the one or more portions of a magnetic material. A technical effect of the spacers is that the fluid pressure can act on the surface facing the valve seat, such that a pressure balance is achieved and the opening or closing requires less energy.

At least one resonant circuits may be provided, which is suitable for receiving an electromagnetic pulse, wherein the at least one resonant circuit is electrically coupled to an electromagnet in the first body.

According to a third aspect of the invention, there is provided a method of changing the state of an inflow control device, the method comprising: arranging a mobile controller within a well, the mobile controller comprising: a first connector electrically connecting the mobile controller to a wireline, and a second connector mechanically connecting the mobile controller to the wireline; an electrical component, coupling electromagnetically

to the inflow control device when the electrical component is electrically energised, operating the mobile controller to open or close the inflow control device remotely.

Electrically energising the electrical component may comprise generating an electromagnetic pulse with a predetermined frequency, and transforming energy from said pulse with a resonant circuit into an electric current, wherein the resonant circuit is provided at the electronic inflow control device.

The electrical component may generate a magnetic field, and the magnetic field may bias a movable second body within the electronic inflow control device from a closed state to an open state, or from an open state to a closed state.

The inflow control device may be opened or closed reversibly in a process of optimising production.

Brief description of the figures

Embodiments of the invention will now be described for the sake of example only with reference to the following drawings in which:

Fig. 1 is a schematic illustration of a section of a wellbore.
Fig. 2 is a schematic illustration of an electronic inflow control device.
Fig. 3 is a schematic illustration a valve.
Fig. 4 is a schematic illustration of landing arrangements of an electronic inflow control device.
Fig. 5 is a schematic B-H plot.
Fig. 6 is a schematic illustration of an electronic inflow control device.
Fig. 7 is a schematic illustration of an electronic inflow control device.
Fig. 8 is a schematic illustration of an electronic inflow control device.
Fig. 9 is a schematic illustration of an electronic inflow control device.
Fig. 10 is a schematic illustration of a section of a wellbore.
Fig. 11 is a schematic illustration of a mobile controller.
Fig. 12 is a schematic of a mobile controller in a wellbore.
Fig. 13 is a schematic illustration of a resonant circuit and an inflow control device.
Fig. 14 is a schematic illustration of a resonant circuit.

Fig. 15 is a method flow diagram.

Detailed description

Figure 1 shows a section 100 of a producing interval of a completed well, disposed within a reservoir 102. A complete producing interval may comprise one or more of these sections 100 joined at each end. In an example, each section may be approximately 12 metres in length and connected to an adjacent section via threaded joints. A typical completed well may comprise 10 to 1000 of these jointed sections 100. Referring back to Figure 1, the section comprises a base string 104 configured to transport production fluids to the surface, a sand screen 106 configured to block sand-like particulates and one or more inflow control devices (ICDs) 108 configured to control the inflow of fluid from the reservoir. Depending on the geology of the formation, sand screens 106 may or may not be required. For example, if sand control is not expected to be a problem, a sand screen 106 may not be used. In this respect, a sand screen 106 can be considered an optional feature. When a sand screen 106 is not used, a coarser filter may be used in its place to protect the inflow control device 108. As would be appreciated by the skilled person, a sand screen 106 is a filter and the aperture size of the screen 106 is in no way limiting. Accordingly, a sand screen 106 may be referred to as a "screen".

When the pressure of the surrounding reservoir is greater than the pressure within the base string, fluid flows from the reservoir through the sand screen and into the one or more ICDs 108 via one or more channels within the base string wall. The arrows in Figure 1 denote the direction of fluid flow. Each ICD 108 comprises an inlet for fluid entry and an outlet for fluid exit. The ICD 108 either allows fluid to pass (an open state) from the one or more channels into the base string for transportation to the surface, or, prevents fluid inflow (a closed state). During production, the direction of fluid flow is expected to be from the reservoir 102 to the base string 104, but the inventors envisage that the ICDs 108 may also be used for injecting fluid from the base string 104 into the reservoir 102. Therefore, terms such as "inlet" and "outlet" can be viewed interchangeably and are defined by the direction of fluid flow. In the context of this description, unless explicitly stated otherwise, the direction of fluid flow is assumed to be from the reservoir 102 into the base string 104. The completed section of well may be in a horizontal configuration, a deviated configuration or a vertical configuration (relative to the direction of the Earth's gravitational pull). In a deviated configuration, the inclination of the well to the vertical

may be between 0 and 90 degrees. The base string 104 may be tubular comprising a longitudinal axis, which defines a first axis, and with a radius, perpendicular to the longitudinal axis, which defines a second axis and a radial direction. As the skilled person would appreciate, the base string 104 may not necessarily be circular in cross-section. For example, the base string may comprise a square cross-section. References herein to "inwardly" and "outwardly" facing are to be interpreted relative to these first and second axes. Explicitly, the surface normal of inwardly facing surfaces points towards the longitudinal axis and the surface normal of outwardly facing surfaces points away from the longitudinal axis. The ICD has dimensions (X, Y). The "width" of the ICD is referred to as the lateral extent, which is the dimension of the ICD along the first axis. The "height" of the ICD is referred to as the radial extent, which is the dimension of the ICD along the second axis. Further references to lateral and radial extent are to be interpreted accordingly. In an embodiment of the present invention, the ICD 108 shown in Figure 1 is an electronic inflow control device (eICD).

Figure 2A shows an electronic inflow control device (eICD) 200 in an open state. The eICD 200 comprises a housing 202, an inlet 204 for fluid entry, an outlet 206 for fluid exit, a moveable body 208 and a stationary body 210 operative to generate a magnetic field. The moveable body and the stationary body may also be referred to as a valve and valve seat, respectively. The moveable body 208 and stationary body 210 are disposed in a chamber (or internal volume) defined by the housing. The stationary body 210 may also be integrally formed with the housing. The stationary body 210 defines a channel in which fluid can pass unimpeded. The moveable body 208 may be a magnetic, more specifically ferro-magnetic disc or plate or a permanent magnet. The lateral extent of the moveable body is greater than the lateral extent of the channel defined by the stationary body. In this way, the moveable body 208 is able to seal the channel defined by the stationary body 210 and prevent fluid flow through the eICD 200.

In some examples, the minimum size of the eICD 200 may be comparable to the smallest existing AICDs. In these AICDs, the smallest radial extent (i.e., the "height") is around 14mm and the smallest lateral extent (the "width") is around 33mm. The eICD 200 may however be smaller than this, as the skilled person would appreciate. The inventors envisage that the minimum inlet size of the eICD 200 may be approximately eight times the screen aperture size. In a typical example, this may be around 2mm, with a smaller size posing a risk of becoming obstructed in some situations, especially if the opening

size is smaller than the aperture size of the sand screen. This minimum inlet size reduces the risk of plugging flow through the eICD 200. In practice, the dimensions of the eICDs 200 may be larger and these values are provided by way of example only.

In the open state, the moveable body 208 is in an open position. In the open position, fluid is able to pass over the outwardly facing surface of the moveable body and into the outlet region. The arrows denote the flow of the fluid through the eICD 200. The arrows are for illustration purposes only and, as noted above, the inlet and outlet can be used interchangeably.

A mobile controller 212 is also shown in Figure 2A. In the illustration, it is shown below the eICD 200 and within a base string, tubular or well, and on the other side of the eICD than the reservoir. The mobile controller 212 can be moved through the bore of the base string and may be stationary at the eICD when used to control the eICD, or the mobile controller can be used to control the eICD while moving past the eICD. The mobile controller generates a magnetic field when in use and the magnetic field acts on the moveable body 208 to change the position from open to closed, or from closed to open.

Under normal operation, the eICD functions without a mobile controller. However, normal operation may be interrupted due to a failure. The source of the failure may vary, but some examples are a lack of power supplied to stationary body 210, an electronic failure in a control unit for stationary body 210, or a mechanical failure of the eICD due to wear or debris.

Figure 2B shows the eICD 200 from Figure 2A in a closed state. In the closed state, the moveable body 208 is in a closed position. In the closed position, the outwardly facing surface of the moveable body and the inwardly facing surface of the stationary body are in contact, thereby forming a fluid-tight seal.

In Figures 2A and B, the inlet is disposed on the “top” radially extending surface of the eICD housing. As the skilled person would appreciate, the general location of the inlet is a design option and the inlet is not limited to this configuration. For example, the inlet may instead be disposed on one of the laterally extending surfaces of the housing 202. In addition, each eICD may comprise one or more inlets and outlets.

The stationary body 210 may comprise a spool or coil of wire surrounded by an electrically insulating layer, which forms an encapsulation. In an example, the spool is toroidal in shape and the hole of the torus surrounds the fluid channel. The spool, when electrically energised, generates a magnetic field. The spool can be energised by passing a direct current through the spool of wire. The stationary body therefore acts as an electromagnet. Herein, the expressions stationary body and electromagnet are used interchangeably. The moveable body 208 is magnetic in one example. That is, in the presence of a magnetic field, a net magnetisation (or magnetic moment per unit volume) is induced within the moveable body 208. Once the moveable body 208 is magnetised, a magnetic attractive force acts between the stationary body 210 and moveable body 208, which urges their respective opposing faces together and the eICD 200 into the closed state. In the example shown, the electrically insulating layer is arranged to form a planar surface on the stationary body such that a fluid-tight seal is formed when in contact with the opposing planar surface of the moveable body.

During operation, the fluid pressure on the inlet-side is greater than the fluid pressure on the outlet-side. When the eICD 200 is in the open state, this pressure difference drives fluid through the eICD. The choking effect of the eICD 200, which in itself results in a pressure drop, ensures that the pressure difference between the inlet and outlet side is maintained under steady state conditions. In principle, during operation, a smaller pressure drop is preferred as this minimises the skin factor and therefore maximises production efficiency. However, in practice, different reservoir zones produce at differing rates due to different rock permeability and porosity and different reservoir zones may also have different water/gas compositions. Therefore, in general, there are imbalances in both quantity of production and quality of production between different reservoir zones. Controlling the pressure drop within a particular reservoir zone is useful for balancing both the quantity and quality of production across these reservoir zones. For example, if one zone is producing too much water or gas, then this zone can be choked (i.e., the eICDs 200 are closed) to reduce production. Equivalently, a zone which is producing too much fluid (regardless of quality) may be choked to slow down fluid inflow. The degree of choking in a reservoir can be controlled by opening and/or closing individual eICDs 200 in an array of eICDs distributed along the base string or pipeline.

Optionally, a nozzle or other fluid restricting means may be placed at the outlet 206 of the eICD. A nozzle may also be placed at the inlet 204. The fixed nozzle can be used to

control the pressure drop generated by fluid passing the eICD 200. The pressure drop being controlled by the shape and size of the nozzle. The pressure drop may also be controlled by the opening or closing of adjacent eICDs.

When the eICD 200 is in a closed state, there is a pressure difference across opposing faces of the moveable body 208. The outwardly facing surface of the moveable body is under a pressure P_1 and the inwardly facing surface of the moveable body is under a pressure P_2, where, in general, P_1 is greater than P_2. The eICD 200 remains in the closed state as long as the attractive magnetic force between the moveable body 208 and the stationary body 210 is larger than the force exerted by this pressure difference. When neglecting any other effects (e.g., weight), the pressure difference across the moveable body 208 is given by the following equation:

$$\Delta P < \frac{A_3}{A_1}(P_2 + 2P_3),$$

Where ΔP is the pressure difference P1-P2, A_1 is the area of the channel defined by the stationary body 210, A_3 is the contact area between the stationary body 210 and the moveable body 208, and P_3 is the pressure exerted by the electromagnet 210 on the moveable body 208. Therefore, by increasing the ratio of A_3 to A_1 (or by increasing the contact area between the moveable body 208 and stationary body 210 relative to the fluid channel defined by the stationary body 210), a weaker electromagnet is required (for the same input current). This equation may therefore not hold for the other examples described in further detail below.

The pressure difference also depends on whether the fluid on the inwardly facing side of the moveable body is a liquid or a gas. Referring back to Figure 1, the fluid on the outlet-side may be the fluid within the base string. These fluids may have been extracted from the reservoir. Such fluids include a mixture of water, oil and/or gas. As each of these phases has a different density, they have a tendency to separate in the base string 204. This is especially true when the base string 204 is oriented in a horizontal fashion with respect to the earth's gravitational pull, in which case the different phases will stratify. In general, the eICD 200 may either be located in a region containing liquid or gas, which in turn, may affect the value of the outlet-side pressure, P_2.

However, it is emphasised that the completion structure 100 may be in a vertical or horizontal configuration (relative to the Earth's gravitational pull) and gravity is not required to open or close the eICD 200. In other words, the orientation of the base string and the relative placement of the eICD within the base string are not essential, but do affect the operating requirements (i.e., the strength of electromagnet required). In addition, the weight of the moveable body 208 may also affect the pressure difference equation above. For example, the weight may reduce the maximum pressure difference (defined when the equation above is an equality) somewhat. Equally, it may increase the maximum pressure difference, depending on the orientation of the completion structure. In general, the lighter the moveable body, the faster the eICD can be switched from the open to closed state (and vice versa). For this reason, preferably the thickness of the moveable body 208 is minimised. Typical thickness values may be 5mm, more preferably less than 1mm. During operation, abrasive particles in the fluid passing through the eICD 200 may abrasively erode the moveable body 208. As such, the moveable body 208 may thin over time. To account for this thinning, the thickness of the moveable body may be larger than the total erosion expected across the expected lifetime of the eICD 200. The exact values are dependent on materials selection and the expected operating pressure difference, as the skilled person would appreciate.

Returning to the mobile controller 212, a failure may occur in stationary body 210 that causes the normal operation of the eICD 200 to fail. In a first example, an electrical power supply to the electromagnet of stationary body 210 fails and no electrical power is supplied to the electromagnet. The stationary body 210 then fails to assert a magnetic force onto moveable body 208. In the most likely scenario described above where P_1 is greater than P_2, the moveable body 208 will be forced down by the well fluid overpressure, as illustrated in Fig. 2A, and the valve will remain open. As mentioned previously, this is not necessarily the case because an inflow of a mixture of gas, water, and hydrocarbons is common and an unstable force distribution onto the moveable body 208 can cause the body to 'rattle' and fluctuate between (partially) open and closed positions. Either way, control over the valve position is lost when stationary body 210 becomes a passive element without electrical power supply.

In an embodiment, mobile controller 212 comprises an electromagnet to produce a magnetic field. The mobile controller is a wireline tool, and electrical cables connect to the tool to a control unit and power supply, typically provided at the surface, for example

at a vessel or a land-based facility. In the example of moveable body 208 comprising a permanent magnetic field, the position of the moveable body 208 can be controlled by mobile controller 212 by producing a magnetic field with an opposite polarity to repel the moveable body, or a magnetic field with the same polarity to attract the moveable body. Control of the position of the moveable body is thereby regained.

If the moveable body 208 comprises a soft-magnetic material, which has little or no retentivity and/or coercivity, the moveable body 208 is demagnetised once the electromagnet 210 is switched off. The differences between hard and soft magnetic materials are discussed in more detail below with reference to Figure 5. In the example of the moveable body 208 comprising a soft magnetic material, the mobile controller 212 can be used to attract the moveable body, but generally not to repel the moveable body. If the mobile controller 212 is moved through the wellbore, away to another valve and is no longer adjacent to the earlier eICD, full control is lost again.

In an alternative example, the moveable body 208 comprises a permanent magnetic material. In the absence of magnetic fields generated either by the electromagnet 210 or the mobile controller 212, the moveable body is bi-stable in this embodiment. The lower part of the housing 214 comprises a soft magnetic material. When in the open configuration shown in Fig. 2A, the attractive magnetic force between the permanent magnet of body 208 and the co-directional magnetic field induced in housing 214 will keep the eICD in the open position. The electromagnet 210 does not need to remain switched on to keep the eICD in the open position. The electromagnet 210 can be activated to generate a magnetic field with the same polarity as the permanent magnet of 208 to attract the body 208 and switch the eICD to a closed position. The shape of the magnetic field of a typical magnet exhibits a density of magnetic field lines in the direct vicinity of the magnet that is significantly larger than the density of magnetic field lines further away from the magnet. In order to 'override' the attractive magnetic force between permanent magnet 208 and housing 214 when those two parts are touching, a sufficiently large force needs to be generated by electromagnet 210, and the attractive force between permanent magnet 208 and housing 214 may be kept small. There are different ways to keep the attractive force between permanent magnet 208 and housing 214 small, such as selecting a material for housing 214 that is only weakly magnetic, and/or providing only a small portion of housing 214 with a magnetic material while making other portions of the housing 214 that are in contact with the permanent magnet,

when in the opened configuration, of non-magnetic material. Another way is arranging spacers to separate the permanent magnet from the magnetic material by a small distance to avoid the strong magnetic attachment associated with a direct contact between magnetic surfaces. The spacers preferably create a sealing contact between both surfaces when abutting such that the separation does not create a leak path in the eICD, or separate seals may be added.

In Figure 2, the contact surface, which forms the fluid-tight seal, between the moveable body 208 and the stationary body 210 comprises two abutting planar surfaces. As the skilled person would appreciate, there are many possible shapes, which are capable of mutually abutting. For example, the contact surfaces of the moveable body and stationary body may not necessarily be planar. Figures 3A and B shows some alternative arrangements. Generally speaking, when the fluid-tight seal is non-planar, the shape of the moveable body and stationary body are complimentary. The shape of the stationary body may be controlled by varying the thickness of the electrically insulating encapsulation spatially around the spool/coil of wire. The shape of the stationary body is therefore not limited to the shape of a spool or coil of wire. Referring to Figure 3A, the moveable body 208 is spherical and configured to fit within channel defined by the stationary body 210. In Figure 3B, an insert 302 is placed within channel defined by the stationary body 210. The radial extent of the insert may be less than the radial extent of the channel defined by the stationary body in which it is disposed. The insert 302 may comprise one or more socket elements 304. Correspondingly, the moveable body 208 may comprise one or more plug elements 306, which are configured to fit within these socket elements 304, in the closed position, to form a fluid tight seal. The open and closed configurations for each arrangement is shown. Referring to Figure 3B, the insert 302 may not be essential. For example, instead of the insert 302, the stationary body 210 may define one or more fluid channels, which act as the one or more socket elements 304. An advantage of using the insert is that fluid on the inlet-side may surround the inner channel wall of the stationary body, thereby acting as a coolant. This may help in dissipating heating from the cool and prevent overheating.

In the eICD 200, the moveable body 208 may be mounted on a landing arrangement 400. The landing arrangement 400 is configured to receive the moveable body 208 in the open position and allow for releasable detachment of the moveable body 208 such

that it can transition to the closed position. The landing arrangement 400 therefore comprises a fastening means.

Referring to Figures 4A and 4B, the landing arrangement 400 may comprise one or pins 402 and the moveable body 208 may comprise one or more corresponding recesses 404 to receive these pins 402 in a mating connection. In the Figures, the inwardly facing surface of the moveable body is shown, as well as the side-profile of the landing arrangement. In some examples, the pins 402 and corresponding recesses 404 may be arcuate, or even circular in shape. Preferably, the landing arrangement 400 is rotationally symmetric such that any rotation of the moveable body 208 relative to the landing arrangement 400 does not affect the ability to form a secure mating connection. Equally, the landing arrangement 400 may instead comprise the recesses 404 and the inwardly facing surface of the moveable body comprises the pins 402. This example is not shown in Figures 4A and B. The landing arrangement 400, in turn, may be fitted securely into the eICD, for instance, using a permanent adhesive. Alternatively, the housing of the eICD 202 may comprise the landing arrangement 400 integrally formed therein.

Referring to Figure 4C, the landing arrangement 400 comprises one or more biasing means such as springs 406. The moveable body 208 thereby being mounted on the one or more springs. In the closed position, the spring is extended from its equilibrium position, thereby producing a restoring force, which urges the moveable body 208 away from the stationary body 210. The arrow shown in Figure 3C denotes the direction of this restoring force. In this way, after the power to the stationary body 210 is switched off, the moveable body 208 “springs” back into the open position automatically using the stored elastic energy. The stiffness of the spring can be judiciously chosen to ensure that this function occurs, as the skilled person would appreciate. At the same time, the inventors realise that using springs comes with a trade-off. On the one hand, it can produce more rapid switching, but on the other hand, the stationary body 210 needs to be stronger to maintain the eICD 200 in the closed state.

Equally, springs (or force restoring components) may not be required. For example, after the electromagnet 210 is switched off, the pressure difference between the inlet 204 and outlet 206, can force the moveable body 208 inwardly into the open position, and the

continuous flow of fluid through the eICD 200 can maintain the moveable body 208 at its open position.

In some examples, the landing arrangement 400 is comprised from a tapering of the inner radially extending surfaces 408 of the eICD, as shown in Figure 4D. Correspondingly, the moveable body 208 is also tapered to fit snugly within this tapered region of the eICD. The moveable body 208 may therefore be frustoconical in shape. Friction between the contact surfaces of the tapered walls and the edges of the moveable body thereby form a mechanical connection that opposes relative motion of the moveable body. The moveable body 208 may instead be a sphere. In such examples, the landing arrangement 400 may comprise a receiving cup or groove, integrally formed in the eICD housing, in which the moveable body 208 snugly fits. More generally, the landing arrangement 400 may be a profile, formed in the housing of the eICD, which allows the moveable body 208 to mate with the landing arrangement. The shape of the profile and the shape of the moveable body 208 are therefore complimentary. That is, the moveable body 208 fits snugly within the profile in the open position.

Figures 4C and 4D illustrate the mobile controller 212 in a position of the bore close to the eICD. As described previously, the mobile controller can be used to switch the valve when the electromagnet 210 fails.

Once the electrical power to the stationary body 210 is switched off, the stationary body 210 ceases to be an electromagnet, and the magnetic field that it produced dissipates rapidly. The moveable body 208 may either be demagnetised or remain magnetised. The response of the moveable body 208 to the removal of the externally applied magnetic field depends on the material in which the moveable body comprises. The characteristics of which are illustrated in the shape of a hysteresis loop in a B-H plot. Typical plots for a hard and soft magnetic material are respectively shown in Figures 5A and B. As the skilled person would know, a magnetic material is not intrinsically “hard” or “soft”, but can acquire these properties extrinsically via appropriate materials processing. If the moveable body 208 comprises a soft-magnetic material, which has little or no retentivity and/or coercivity, the moveable body 208 is demagnetised once the electromagnet 210 is switched off. That is, after the external magnetic field (H) is removed, the magnetisation within the moveable body 208 is effectively lost. The moveable body 208 remains magnetic, but it is not a magnet. Generally speaking, a

magnet has a non-zero net magnetisation, whilst a magnetic material does not. Referring to Figure 5B, the "B" field generated by the moveable body 208 in the absence of an external magnetic field (H) is negligible. If the moveable body 208 comprises a "hard-magnetic material", then it remains magnetised after the power to the stationary body 210 is switched off. A hard-magnetic material has appreciable retentivity and coercivity. That is, after the external magnetic field (H) is removed, the magnetisation within the material remains (which is known as the "retentivity"). The resulting "B" field, at no applied external field (H), is therefore large and non-zero. In such cases, the moveable body 208 becomes a permanent magnet. A hard-magnetic material can be demagnetised by applying an external magnetic field (H) in the opposite sense. The magnitude of field (H_c) required to demagnetise the magnet is known as the coercivity value. The moveable body 208 of the present invention may be comprise a hard or a soft magnetic material.

Possible magnetic materials include: iron, cobalt, nickel. Preferably, the moveable body comprises a magnetic iron or nickel alloy. Magnetic iron alloys include any magnetic form of steel (i.e., comprising the ferrite phase). Iron-based alloys are cheap, but are more susceptible to corrosion. On the other hand, nickel alloys are more robust to corrosive environments but are more costly. In some examples, the iron or nickel alloy may comprise a polymer metal-matrix composite (PMMC). In a PMMC, particles of iron and/or nickel are dispersed within an electrically insulating polymer matrix. The particles may be either magnetically "soft or hard". The polymer serves two main functions. Firstly, they exhibit high ionic resistance and protect the metal particles dispersed within from corroding. Secondly, polymers are more compliant than conventional metal alloys and therefore may form a more robust fluid-tight seal. In addition, the inventors envisage that the fluid, flowing through the eICD 200, may comprise abrasive particles. These abrasive particles can cause erosion in mechanically soft materials. For this reason, parts of the eICD 200 in contact with the fluid may comprise the mechanically hard tungsten carbide, possibly as an outside layer. The PMMCs described above may be hardened by including tungsten carbide particles into the matrix.

Abrasive particles in the fluid may lead to rapid erosion rates within the eICD 200, especially with components that face the fluid direction. The erosion may be localised in this region. The inventors envisage that this might set the useful lifetime of these eICDs 200. In that respect, the flow directions shown in FIG. 2A, 2B, 6A, 6B, 9A, 9B can be

reversed. That is, the inlet 210 may act instead as an outlet 206 and vice versa. In these configurations, fluid inflow acts tangentially to the surface of the moveable body 208 and localised erosion is less likely to occur. With flow over the surface of the moveable body 208, forces due to the Bernoulli effect may be large enough to cause lift. For this reason, such configurations may further comprise a landing arrangement to ensure that the moveable body 208 remains in the open position. Preferably, the lift generated by the Bernoulli effect is smaller than the force maintaining the moveable body 208 in the open position.

In other examples, the moveable body 208 may already be a permanent magnet. In these cases, the magnetic axis of the magnet 208 is aligned with the coil axis (i.e., the polarity of the electromagnet 210). If the moveable body 208 is a magnet, then the open and closed positions can be controlled by switching the polarity of the electromagnet 210. That is, by reversing the direction of the direct current in the spool/coil of wire. In the closed position, the stationary body 210 is configured to attract the moveable body 208, and in the open position, it is configured to repel the moveable body 208. Preferably, but not necessarily, the magnetic field (in the opposite sense) applied to the moveable body 208 (which is a magnet) is less than the coercive field (H_c) such that the moveable body 208 remains magnetised. Reversing the polarity of the electromagnet 210 to repel the moveable body 208 may reduce the time taken to switch the eICD 200 from a closed to an open state (and vice versa) because an additional external force is applied to open and close the eICD 200.

Referring to Figures 6A and B, the eICD 200 may further comprise a second electromagnet 602. The second electromagnet 602 may also comprise a spool or coil of wire, encapsulated by an electrically insulating material. The second electromagnet 602 may replace the landing arrangement 400. The eICD 200 therefore comprises a pair of electromagnets 210, 602. In the open position, a direct current is passed through the spool of wire in the second electromagnet 602 to switch it on to magnetically attract the moveable body 208 in the open position. The first electromagnet 210 is switched off. In the closed position, the second electromagnet 602 is switched off, and the first electromagnet 210 is switched on to attract the moveable body 208 to the first electromagnet 210, thereby forming the fluid-tight seal. In these examples, the moveable body 208 may be a magnet and/or comprise magnetic material. If the moveable body 208 is a magnetic material, the polarities of each electromagnet 210, 602 may be the

same or different, as magnetic materials are not repelled in a magnetic field. If the moveable body 208 is a magnet, then the polarities of each electromagnet 210, 602 is the same. In a different example, each electromagnet 210, 602 is powered in the closed and the open state. In the closed state, the electromagnet 210 magnetically attracts the moveable body 208 and the second electromagnet 602 magnetically repels the moveable body 208. Conversely, in the open position, the opposite is true. In these examples, the polarity of each electromagnet 210, 608 is opposite. The second electromagnet 602 may further comprise a core material, disposed within the spool/coil of wire, which exhibits high magnetic permeability, in order to increase the magnetic field that the electromagnet 602 generates.

The mobile controller 212 is again illustrated in Fig. 6B. If the moveable body 208 is a permanent magnet, the electromagnet of the mobile controller can repel the moveable body by generating a magnetic field with opposite polarity, and can attract the moveable body by generating a magnetic field with the same polarity. If the moveable body is a magnetic material but not a permanent magnet, the mobile controller 212 can only attract the moveable body.

Although the mobile controller is not illustrated in each of the figures illustrating the eICD, it can be used in each example.

Figures 7A and B show another example of an eICD 200 in an open and closed state. In this configuration, the inlet 204 and outlet 206 are disposed on opposing sides of the housing 202. The inlet 204 and outlet 206 are disposed within the laterally extending surface of the housing 202. Accordingly, the path of fluid through the eICD 200 is different to that of the eICD 200 depicted in Figures 2A, 2B, 6A and 6B. The fluid flows in via the inlet, over the outwardly facing surface of the moveable body, around and beneath the moveable body 208, rather than simply over it. The fluid path is denoted in the figure with the arrows. The closing and opening principle of the eICD 200 is the same as described in detail above. In this example, the landing arrangement 400 may comprise a plurality of pins 402 or a plurality of springs 406. Each pin 402 is configured to fit inside a corresponding recess 404 in the inwardly facing surface of the moveable body. Preferably, the radial extent of each pin is larger than the depth of the corresponding recess, such that, when the moveable body 208 is in contact with the landing arrangement 400, there is a gap for fluid to flow around and beneath the moveable body

208 and out of the eICD 200 via the outlet 206. In the event that the pressure on the outlet-side exceeds that of the inlet-side, any induced flow in the opposite direction (opposing the arrows in the figure) urges the moveable body 208 into contact with the electromagnet 210, thereby preventing fluid flow. This arrangement therefore produces uni-directional flow.

Figures 8A and B show another example of an eICD 200 in an open and closed state. In this example, the channel defined by the stationary body 210 is not used for fluid flow. Instead, the channel defined by the stationary body 210 is filled with (or contains) a core 802. The core 802 comprises a material with a high magnetic permeability such as to increase the magnetic field generated by the electromagnet 210. In some examples, the core may be "T" shaped, so that in the closed position, the moveable body 208 is in contact with the core 802 (which exhibits magnified magnetic field) rather than directly to the encapsulation of the stationary body 210. In the eICD 200, fluid flows around the electromagnet 210 and through a channel defined by an aperture 804 in the moveable body 208, before exiting the outlet 206. The fluid path is denoted in the Figure with the arrows. In an example, the moveable body 208 is annular in shape. Annular may refer to a circular ring, or a rectangular ring. In other examples, the moveable body is a cuboid, or rectangular cuboid with one or more apertures 804. The full lateral extent of the moveable body (including the aperture) is substantially the same as the lateral extent of the eICD. In this way, the moveable body 208 forms a fluid tight seal along the radially extending walls of the eICD. A lubricant may be used along these walls within the eICD 200 to allow for this movement of the moveable body 208. If the moveable body 208 comprises a single aperture, then the lateral extent of that aperture 804 is less than the lateral extent of the stationary body 210 to ensure a fluid tight seal in the closed position. If the moveable body 208 comprises more than one aperture 804, then each aperture 804 is located within an area defined by projecting the lateral extent of the stationary body onto the moveable body 208 along the radial direction. Equivalently, when in the closed position, all the apertures 804 of the moveable body are located within the lateral extent of the stationary body 210 so that a fluid-tight seal is formed. Any of the landing arrangements 400 described above may be used.

The stationary body 210 may be secured to the "top" laterally extending surface of the housing by any means as can be envisaged by the skilled person. Figure 8C illustrates the "top" side of the eICD comprising a plurality of inlets 204. Each inlet 204 is separated

from another with a bridging member, formed out of the eICD housing 202. Each inlet 204 may be arcuate, circular, rectangular in shape, or any other shape, as would be appreciated by the skilled person. The central element shown in Figure 8C provides a location for securement of the stationary body 210.

Referring to Figures 9A and B, another example of an eICD 200 in an open and closed state is shown. Comparing the example to the eICD 200 in Figure 8, the outlet portion comprises a channel within the housing with a lateral extent and radial extent. The electromagnet may comprise a core. In the example shown, a T-shaped core is used. As the outlet 206 is no longer disposed immediately beneath the moveable body 208, the moveable body 208 does not require an aperture 804. The moveable body may be a planar disc or plate. As in Figure 8, the lateral extent of the moveable body is substantially the same as the lateral extent of the eICD in order that a fluid tight seal is formed along the radially extending walls of the eICD 200. A lubricant may be used to allow movement of the moveable body 208. In the closed position, the moveable body 208 preferably does not cover the outlet entirely. In this way, any low-pressure region (i.e., the absence of fluid) generated when the moveable body 208 moves from the open position to the closed position may be filled with fluid from the outlet-side. This therefore minimises the pressure difference across the moveable body, because the region of very low pressure is removed, and accordingly, reduces the required strength of the electromagnet 210. The moveable body 208 may be controlled by magnetic means as described in detail above. Any of the landing arrangements 400 described above may be used.

As referred to above, the inlet 204 may also be disposed in one of the laterally extending surfaces of the eICD housing 202. In such examples, fluid inflow may pass over the surface of the moveable body 208. As is known, for example from WO2008/004875, flow over surfaces may generate lift in accordance with the Bernoulli effect. Preferably, in such arrangements, the lift generated by the Bernoulli effect is less than the force holding the moveable body 208 in the open position.

In another example, the moveable body 208 in the eICD 200 may be free floating. That is, the moveable body 208 may sit, unsecured, on a landing arrangement. According to the Bernoulli principle, the moveable body 208 may either be forced onto this landing arrangement, or urged away from it, as for example described in WO2008/004875, with

the moveable body 208 in an open state. In that respect, the eICD 200 may be structurally similar to an AICD. However, a disadvantage of the AICD is that it is unable to fully close. This means that unwanted fluids, such as excess gas or water, can be reduced, but not eliminated altogether during production. An eICD 200 of this kind may operate substantially autonomously, but in addition, operative to fully close using the magnetic means described in detail above.

The housing of the eICD 202 may preferably, but not necessarily, be integrally formed with the wall of the base string. In other examples, the eICD 200 is a separate component, which is inserted into a hole or recess drilled into the wall of the base string. These arrangements are shown in Figures 10A and 10B respectively.

Whilst the inventors envisage primarily using the eICDs 200 in the producing section of a well, they may also find use in other areas of the well. For example, the eICDs may as water injectors in injector wells. When used as a water injector, the pressure differential across the eICD 200 in the closed state may be comparatively higher than with an inflow control device. The electromagnets 210, 602 may therefore require larger input currents.

Fig. 9C illustrates a further embodiment, with an eICD shown attached to a pipeline section. The eICD comprises a first body housing a moveable second body. The second body comprises a permanent magnet 91 that attracts an adjacent magnetic material 94 in the closed position, and a permanent magnet that attracts an adjacent magnetic material 93 in the open position. The magnetic materials 93 and 94 are relatively thin to reduce the attractive force and spacers are provided to avoid the strong magnetic force when the permanent magnets and magnetic materials are in direct contact, such that the attractive force can be overcome by electromagnet 95. The electromagnet 95 can switch the valve between closed and open position, and the valve is stable in either position while the electromagnet is switched off. The top 96 of the eICD has a frustoconical shape, with a corresponding technical effect of reducing turbulence of the fluids flowing into the valve. The portion of the eICD where the fluid enters the device comprises a hardened material 97, such as hardened steel or synthetic diamond, to reduce wear. The second body comprises a shoulder 98 provided around the periphery of the body, which engages with a corresponding shoulder 99 on the housing, to improve the seal and/or to define a stop in addition to the spacers.

As detailed above, a complete producing interval of the well may comprise one or more of the sections illustrated in Figures 10A and 10B. Each section shown may be connected to another section via, for example, threaded joints at either end. Each section comprises at least one eICD. In some examples, each section comprises more than one eICD and the plurality of eICDs are disposed with an angular spacing in the base string wall. In general, the spacing is equal to 360/n, where n is the number of eICDs in the section. In addition, each section of the producing interval of the well is in electrical connection so that electrical power can be supplied to the one or more eICDs 200 located on each section. The electrical connections may be provided by means known to the skilled person, such as cables, optionally in combination with inductive couplings.

A wireline 1002 is provided, connected to the mobile controller 212. The wireline comprises one or more of power cables, control cables, and support cables for structural support. The word 'wireline' is a term of the art and the skilled person will understand the technical requirements. Devices can be attached to the wireline, lowered into the wellbore, raised back to the surface, and be controlled from the surface. Advantages of wireline technology include the use smaller surface vessels and simpler technology when compared to some other intervention tools. Optionally, a production logging tool (PLT) 1004 is also attached to the wireline 1002. The PLT can be used to measure the inflow from each eICD or reservoir zone, and includes the required sensors such as flowmeters, thermometers, pressure sensors, etc. The measurements by the PLT can be used to determine control signals for the mobile controller. For example, if a sudden influx of an undesired fluid is detected with the PLT, the mobile controller can be used to close a corresponding set of eICDs. The mobile controller can be pulled past the eICD and switch the position between open and closed when adjacent to the eICD.

Although not illustrated, a wireline tractor can also be used for transporting the mobile controller through the wellbore. Although the wireline itself can usually perform a function of pulling, in some wells it is more challenging to push, in particular in horizontal wells where gravity would not assist in moving the mobile controller downwards. A wireline tractor receives electrical power and signal from the wireline. The tractor comprises drive sections such as wheels that engage with the wall of the well. The wheels may be driven by hydraulic power or electrical power, and rotate against the wall to drive the tractor to

transport passenger tools such as the PLT and the mobile controller towards the desired location.

The mobile controller is described with reference to a schematic illustration in Fig. 11. The mobile controller comprises an electromagnet 1101. The position, power supply and control signal are provided to the electromagnet by wireline 1002. The electromagnet comprises a soft magnetic core 1102, surrounded by two sets of coils 1103, 1104. The electric current through one of the two coils is opposite to the electric current through the other one of the two coils, and the two coils therefore create magnetic fields with opposite polarity. One set of poles therefore overlaps, whether both north poles, as illustrated in Fig. 11A, or both south poles, as illustrated in Fig. 11B. Figure 11C illustrates a vertical cross section along dashed line L shown in Fig. 11A. The cross section of the core is shown as being circular, but other shapes may also be used such as square or rectangular. The magnetic field lines spread radially outwards uniformly across all angles, as illustrated in Fig. 11C. The mobile controller can therefore be used in any rotational orientation. It is possible to switch between the field of Fig. 11A and B by reversing the direction of the current in both coils.

The technical effect of using two opposite magnetic fields is two-fold: the density of the magnetic field lines across line L is significantly higher than if a single magnet is used, and the density at the centre is significantly higher than the density of the opposite poles at both ends of the mobile controller. In the Fig. 11A illustration, the density of the central north pole field lines is much higher than the density of the field lines of the south poles on both ends of the device. The same is true for the Fig.11B illustration, but then the other way around, with the strong south pole field lines in the centre, and the weaker north pole field lines at the outsides. When used for switching a magnetic elCD, the threshold of magnetic field strength at which the permanent magnetic second body switches position is chosen such that the central magnetic field lines are above the switching threshold, while the magnetic field density of the opposite poles is below the switching threshold. This avoids the field of the opposite poles reversing the switching carried out by the central field.

The strength of the central magnetic field relative to the end poles can further be increased by increasing the overall length of the electromagnet, or by reducing the diameter of the electromagnet towards the two ends.

If the use of a threshold is too difficult in some practical scenarios, for example if the distance between the mobile controller and the eICDs cannot be controlled easily due a strong fluid flow, the odd number of poles can be used to cause an effective overall switch: the two south poles and one north pole of Fig. 11A (or two north poles and one south pole of Fig. 11B), would cause an odd sequence of switches when the mobile controller passes the eICD – 'up-down-up', or 'down-up-down', thereby causing an overall change.

In a particular use-scenario, a series of eICDs, perhaps even all eICDs, have experienced a power supply failure and are in an open position while the ability to switch them back to a closed position by way of the permanent control system is no longer available. A mobile controller can then be run through the wellbore with a wireline. The mobile controller can remain switched on, and can be pulled past the series of eICDs, switching each one from open to closed when passing by. In this use scenario, the mobile controller does not need to 'know' the precise location of the eICDs. If the location does need to be determined, the eICDs can be provided with an RFID tag, and the mobile controller with a corresponding detector circuit, for example. Additionally, or alternatively, a Casing Collar Locator (CCL) can be used to locate casing collars or sand screen collars. A CCL as such is known technology, and the skilled person will know how to use it for locating a collar. The position of the eICD(s) are subsequently determined based on the distance between the sandscreen collar to the eICD(s) being a known and fixed distance.

The presence and direction of the electrical current can be controlled directly from the wireline, by passing a current through one of the electrical cables of the wireline into the coils. Alternatively, a local microprocessor is provided at the mobile controller for controlling the current, and the microprocessor is arranged to receive signals from the surface through the wireline.

Fig. 12 illustrates the mobile controller of Fig. 11A when passing a set of eICDs 200, provided within a sand screen joint 1202. The eICD of Fig. 9C is particularly suitable for use with the mobile controller of Fig. 12 because it is bi-stable in the absence of a working eICD electromagnet, and it can be switched both ways because the second body comprises a permanent magnet. The magnetic field lines pass through the eICDs to

switch the position from open to closed, or the other way around. The housing of the eICD and position within the joint 1202 is designed to avoid shielding of the magnetic field from the mobile controller, by positioning and/or selection of magnetic materials. A magnetic field can be blocked by a Faraday cage, or a thick layer of magnetic material, and such structures are avoided in between the eICD and the mobile controller. The mobile controller is preferably centered within the wellbore or pipe, and standard centralisers can be used for this purpose.

Fig. 13 illustrates an alternative arrangement for the eICD, whereby the mobile controller sends a short pulse of EM energy towards the eICD. The mobile controller has an EM transmitter for this purpose, arranged to transmit an RF pulse. Examples of transmitters are a loop antenna, a coiled antenna, a dipole antenna. The pulse has a first frequency for opening the eICD, and a second frequency for closing the eICD. Although purely for illustrative purposes, the frequency of the first pulse may be around 300MHz, and the frequency of the second pulse may be 350MHz, or higher to avoid overlap with the first resonance. Higher frequencies may also be used, such as in the GHz range, while preferably avoiding frequencies within the strong absorption band of water. The first frequency is resonant with a first pickup coil located at the eICD, while the second frequency is resonant with a second pickup coil located at the eICD.

Figure 13A illustrates a first circuit for picking up the first frequency f_1 comprising an inductor L_1, typically a coil, and a capacitor C_1. The signal is rectified, for example by an ac to dc converter D_1, and the signal is then coupled to a coil L_3 for pushing the magnet M. Likewise, inductor L_2 is arranged to pick up the second frequency f_2 in a circuit with capacitor C_2 and rectifier D_2 to drive second coil L_4 for pulling the magnet M. The pulling and pushing is obtained by generating opposite magnetic fields.

Figure 13C illustrates an eICD including the inductors L_1 and L_2 at a lower part of the eICD, such that it is close to a mobile controller when the mobile controller is passing the eICD. The inductors L_3 and L_4 are provided close to the magnet M such that they can apply a force onto the magnet. The eICD is illustrated in open configuration, with the arrows showing a fluid path through the eICD.

The same inductors L_3 and L_4 can be used in non-contingency operations, when they receive power and signal from cables or other means which are permanent features of the well assembly, instead of receiving a signal or power from the mobile controller.

The power and signal supply from permanent well assembly features are discussed next. Each section of the well completion, as depicted in Figure 10A and B, comprises an electrical circuit which provides power to one or more electrical devices within the section. The electrical circuit could comprise a local energy storage unit (e.g., a battery). However, preferably, power is supplied to the section via electrical cabling. One such electrical device may be the stationary body 210 of the eICD 200. Other electrical devices include: pressure gauges, temperature gauges and flow-meters, water cut meters and gas detection meters. Referring now to Figure 14, a schematic electrical circuit 1400 is shown. The electrical circuit 1400 comprises: a pick-up coil 1402 operative to generate an alternating current in the electrical circuit in a magnetic field; an a-c to d-c convertor 1404 configured to rectify the electrical signal; a computer chip 1406 comprising an electronic circuit; and one or more electrical devices 200, 1208 connected to the computer chip 1406. The electrical circuit 1400 may also comprise an amplifier. Generally speaking, the computer chip is configured with a microcomputer circuit board (a micro-controller and a microprocessor), memory and, optionally, an antenna for communication. The computer chip 1406, ac-to-dc convertor 1404 and the pick-up coil 1402 may be housed in an electrically insulating encapsulation 1410 to prevent electrical shorts from fluid ingress. One or more electrical connections may be made from the computer chip 1406 to the one or more electrical devices 1408, 210 via fluid-tight ports in the housing 1410.

The pick-up coil 1402 is located radially adjacent to electrical cabling and oriented such that the coil axis of the pick-up coil 1202 is aligned in the circumferential direction (i.e., the magnetic field). For example, in the wall of the base string. As the cabling runs along the base string 104 and carries an alternating current, it generates an alternating magnetic field in the circumferential sense, which, in turn, can induce an alternating electromotive force (emf) in the pick-up coil 1402. The induced emf causes an alternating current to flow in the electrical circuit. In this way, electrical power can be transferred inductively from the electrical cabling to the electrical circuit 1400. In a different example, which is not illustrated, power can be delivered to the electrical circuit 1400 via direct electrical connection with the tubular electrical cabling or electrical cabling. The power

can then be used to control one or more devices connected to the computer chip 1406. If the section comprises more than one eICD 200, each eICD may be connected to a different computer-chip port.

As the computer chip 1406 and electrical devices 210, 1408 are powered using direct current, an ac to dc convertor 1404 can be used to convert the induced alternating current into a direct current. In some examples, the computer chip 1406 may include an ac to dc convertor 1404. The alternating magnetic field generated from the electrical cabling will introduce perturbations to the magnetic field generated by the stationary body 210. However, the magnitude of the latter magnetic field is much larger than the alternating magnetic field because the electromagnet 210 comprises many turns of wire and the radius of each coil in the electromagnet is small (on the order of a few mm). Conversely, the electrical cabling comprises only a single "turn" and the radius of that turn is equal to the radius of the base string (on the order of tens of cm). The alternating magnetic field is therefore not expected to be very large, or affect the position of the moveable body 208 in the eICD 200. If an electromagnetic core 802 is used in the electromagnet 210, the magnetic field will be increased even further. In a similar light, to prevent the base string 104 acting as a magnetic core to the electrical cabling, the base string may comprise a non-magnetic material.

Furthermore, when the electrical cabling is disposed around the base string 104 it does not generate a magnetic field within the base string 104. In this configuration, magnetic interference is removed altogether. Accordingly, the pick-up coil 1402 is placed radially adjacent but outside the electrical cabling in order to "pick up" a magnetic field. As referred to above, this can be achieved by forming one or more holes in the electrical cabling.

Depending on the modulation of the electrical signal, the computer chip 1406 determines whether to power on or off the corresponding computer-chip-ports that the electrical devices 1408, 210 are connected. Computer chips 1406, which comprise a microcontroller, are readily programmable and are considered "off the shelf" technology. Any known technique of signal modulation may be used to provide the computer chip 1406 instructions. The electrical signal is preferably modulated at the surface of the well. However, in other examples, one or more modulators and demodulators may be located downhole for this purpose. The signal may be transmitted via a communication protocol.

In this way, each section comprising a computer chip 1406 may be independently controlled. Any known communication protocol may be used.

The computer chip 1406 may be configured to take readings from the one or more other electrical devices 1408 periodically. The computer chip 1206 may then transmit the signal to the surface via electrical cabling. One or more amplifiers may be used to amplify the signal before coupling with the electrical cabling. The signal may be coupled between the computer chip and electrical cabling by inductive means, using a coil similar to the pick up coil shown in Figure 14. Preferably, the longitudinal axis of the electrical cabling and the axis of the coil are substantially aligned to maximise this coupling. In another example, the readings may be transmitted via an antenna on the computer chip 1406, which is able to modulate the readings into a signal. The signal may be transmitted as an electromagnetic carrier wave (e.g., a RF signal). The signal may then be relayed, via one or more transmitter and receiver elements within each section of the completion structure, to neighbouring sections and thereby to the surface. As power is supplied via the electrical cabling, the transmitter and receivers may be directional. That is, the transmitters are operative to transmit RF signal out of the wellbore and the receivers are operative to receive RF signals downhole. One or more amplifiers may also be used. The transmitter and receivers may be located within a channel defined in the base string wall. In yet another example, optical fibres may be used to transmit the signal from the chip 1406 and the surface.

Figure 15 is a method diagram, showing the following steps in a method of changing the state of an inflow control device: (S1) arranging a mobile controller within a well. The mobile controller comprises the features described previously: a first connector electrically connecting the mobile controller to a wireline, and a second connector mechanically connecting the mobile controller to the wireline; an electrical component, coupling electromagnetically to the inflow control device when the electrical component is electrically energised. (S2) operating the mobile controller to open or close the inflow control device remotely.

Although the invention has been described in terms of preferred embodiments as set forth above, it should be understood that these embodiments are illustrative only and that the claims are not limited to those embodiments. Those skilled in the art will be able to make modifications and alternatives in view of the disclosure which are contemplated

as falling within the scope of the appended claims. Each feature disclosed or illustrated in the present specification may be incorporated in the invention, whether alone or in any appropriate combination with any other feature disclosed or illustrated herein.

5

CLAIMS:

1. A wireline mobile controller, arranged to open or close an inflow control device installed in a well, the mobile controller comprising:

a first connector for electrically connecting the mobile controller to a wireline, and a second connector for mechanically connecting the mobile controller to the wireline;

an electrical component, arranged to couple electromagnetically to the inflow control device when the electrical component is electrically energised, and to open or close the inflow control device remotely.

2. The mobile controller of claim 1, wherein the electrical component comprises two electromagnets, arranged substantially co-axially around a core, and, in use, arranged to generate two corresponding magnetic fields with opposite polarities.

3. The mobile controller of claim 2, wherein the two electromagnets are arranged along a longitudinal axis, and wherein the longitudinal axis substantially coincides with the main axis of a bore of the well in use.

4. The mobile controller of any one of the preceding claims, further comprising centralisers for centralising the mobile controller within the well.

5. The mobile controller of claim 1, wherein the electrical component comprises an electromagnetic transmitter, arranged to emit an electromagnetic pulse, and an electronic circuit to send an electronic signal to the transmitter for emitting the electromagnetic pulse.

6. The mobile controller of claim 5, wherein the electromagnetic transmitter and the electronic circuit are arranged to generate at least two electromagnetic pulses, wherein a first electromagnetic pulse has a different frequency than a second electromagnetic pulse.

7. An inflow control device, suitable for use with the mobile controller of any one of claims 1 to 6, wherein the electronic inflow control device is configured to switch between an open and a closed state, the inflow control device comprising:

an inlet for fluid entry;

an outlet for fluid exit;

a housing;

a first body and second body arranged within the housing, wherein the second body is moveable relative to the first body, wherein in an electrically energised state, the first body is operative to magnetically attract or repel the second body;

wherein, in the open state, the first and second body are located at respective open positions and define a continuous fluid path within the housing, through which fluid can flow from the inlet to the outlet;

wherein, in the closed state, the first and second body are located at respective closed positions, thereby blocking said continuous fluid path.

8. The inflow control device of claim 7, wherein the first body comprises an electromagnet.

9. The inflow control device of claim 7, wherein the second body comprises a permanent magnet, the permanent magnet being controllable with the mobile controller, and wherein the housing comprises one or more portions of a magnetic material, arranged adjacent the permanent magnet in the open or closed state.

10. The inflow control device of claim 9, further comprises spacers for avoiding a direct contact between the permanent magnet and the one or more portions of a magnetic material.

11. The inflow control device of claim 7, further comprising at least one resonant circuits suitable for receiving an electromagnetic pulse, wherein the at least one resonant circuit is electrically coupled to an electromagnet in the first body.

12. A method of changing the state of an inflow control device, the method comprising:

arranging a mobile controller within a well, the mobile controller comprising: a first connector electrically connecting the mobile controller to a wireline, and a second connector mechanically connecting the mobile controller to the wireline;

an electrical component, coupling electromagnetically to the inflow control device when the electrical component is electrically energised,

operating the mobile controller to open or close the inflow control device remotely.

13. The method of claim 12, wherein electrically energising the electrical component comprises generating an electromagnetic pulse with a predetermined frequency, and transforming energy from said pulse with a resonant circuit into an electric current, wherein the resonant circuit is provided at the electronic inflow control device.

14. The method of claim 12, wherein the electrical component generates a magnetic field, and wherein the magnetic field biases a movable second body within the electronic inflow control device from a closed state to an open state, or from an open state to a closed state.

15. The method of any one of claims 12 to 14, wherein the inflow control device is opened or closed reversibly in a process of optimising production.

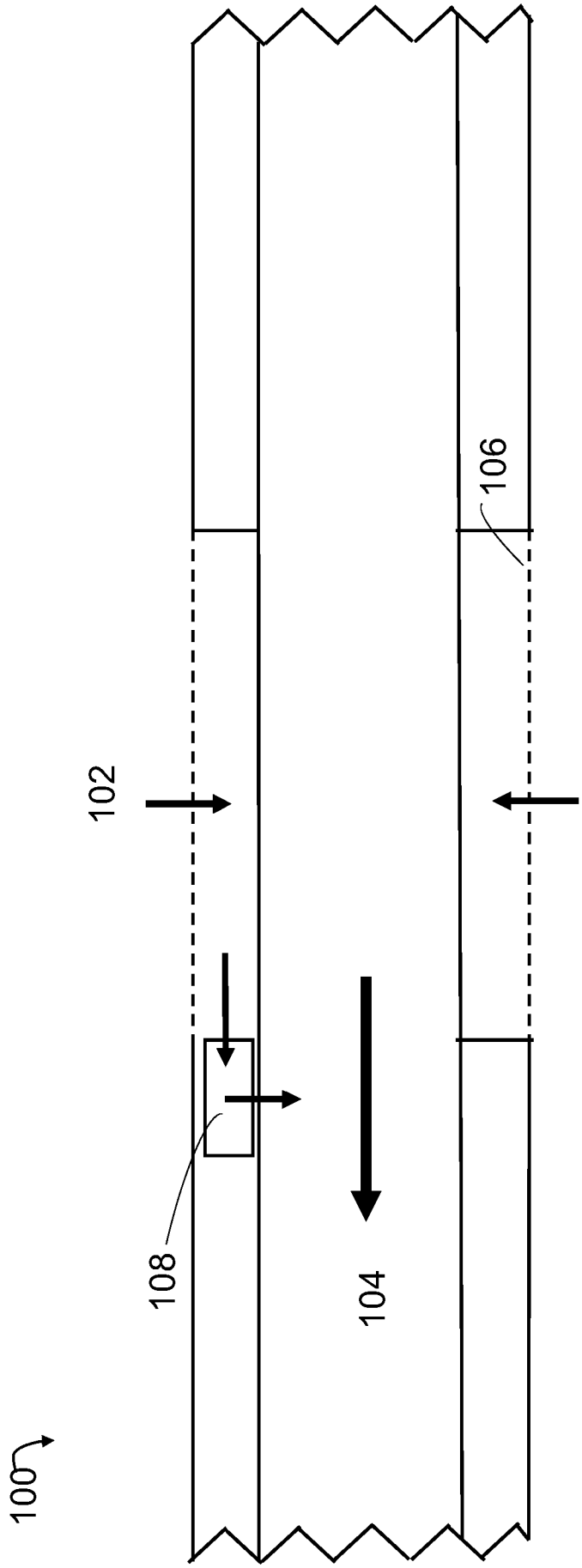

FIG. 1

FIG. 2A

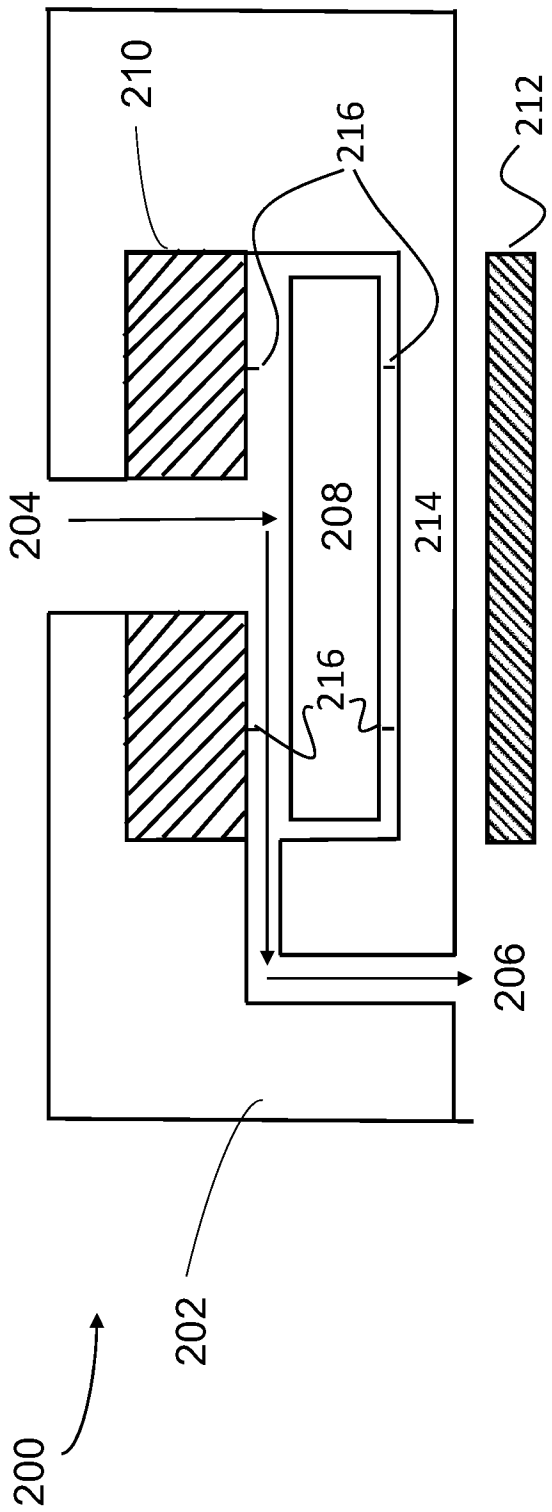
210
216
212
204
208
214
216
206
202
200

FIG. 2B

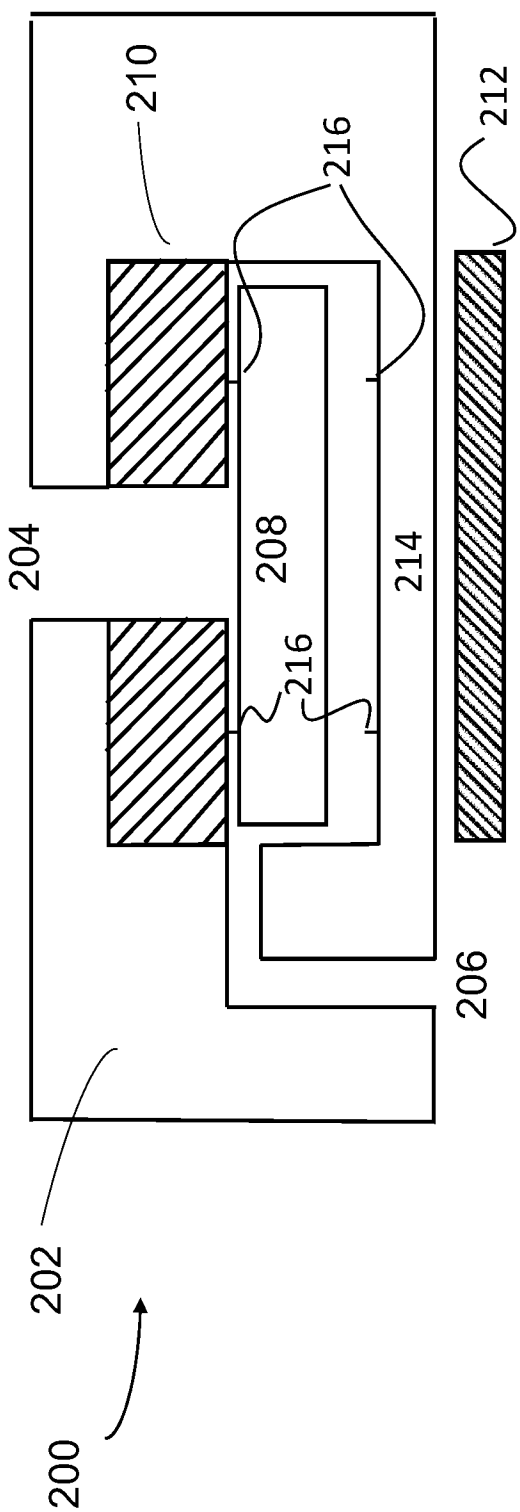
210
216
212
204
208
214
216
206
202
200

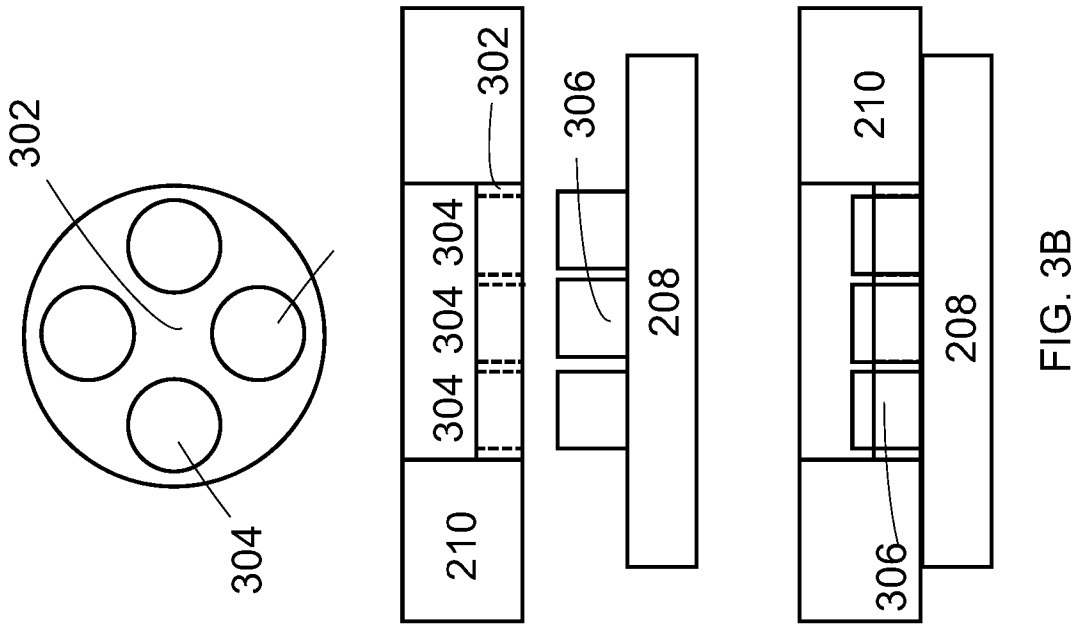
302
304
302
304
304
304
304
306
208
210
210
306
208

FIG. 3B

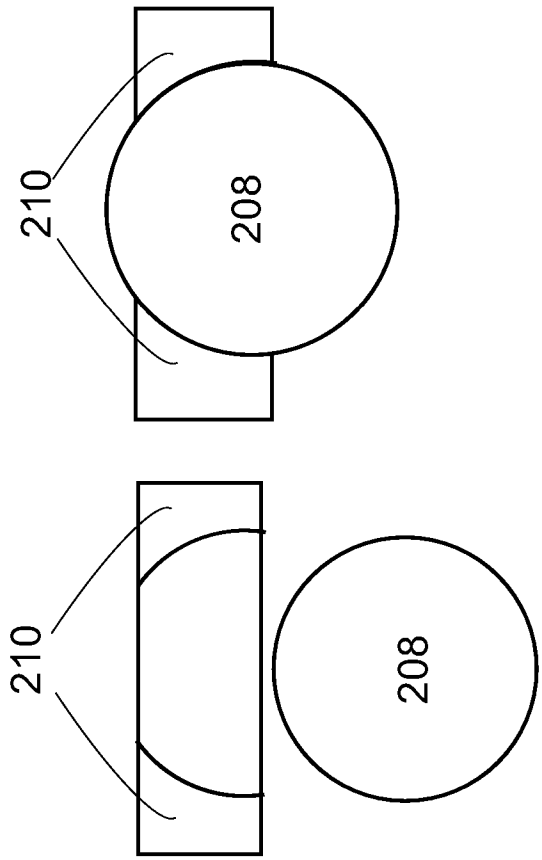
210
208
210
208

FIG. 3A

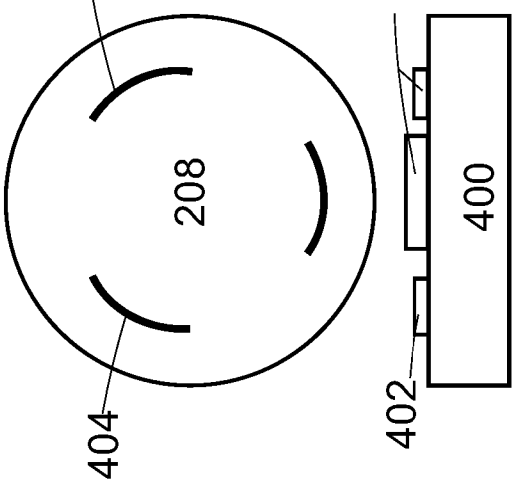

FIG. 4A

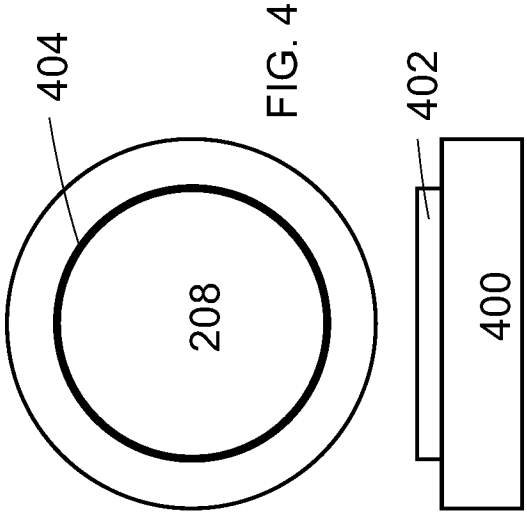

FIG. 4B

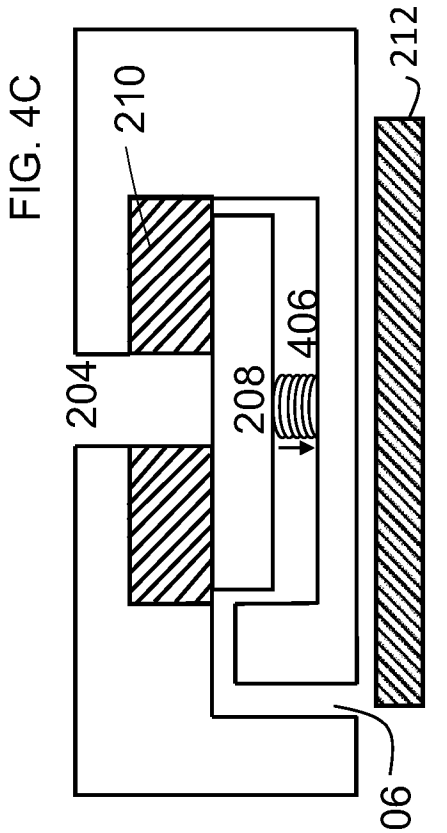

FIG. 4C

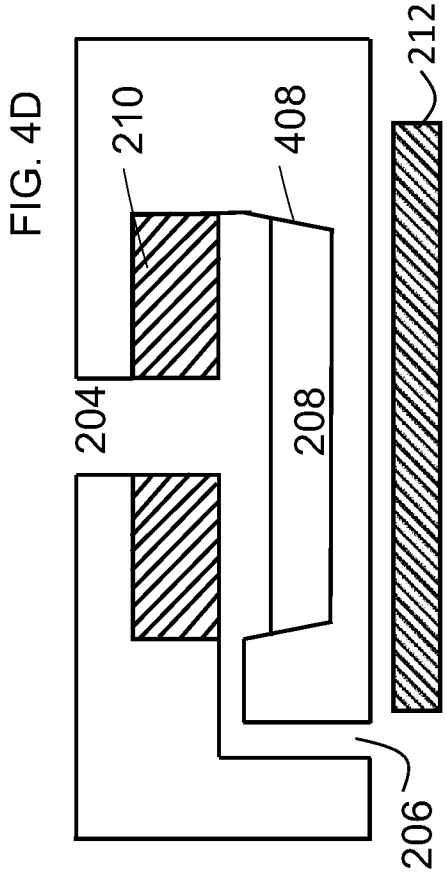

FIG. 4D

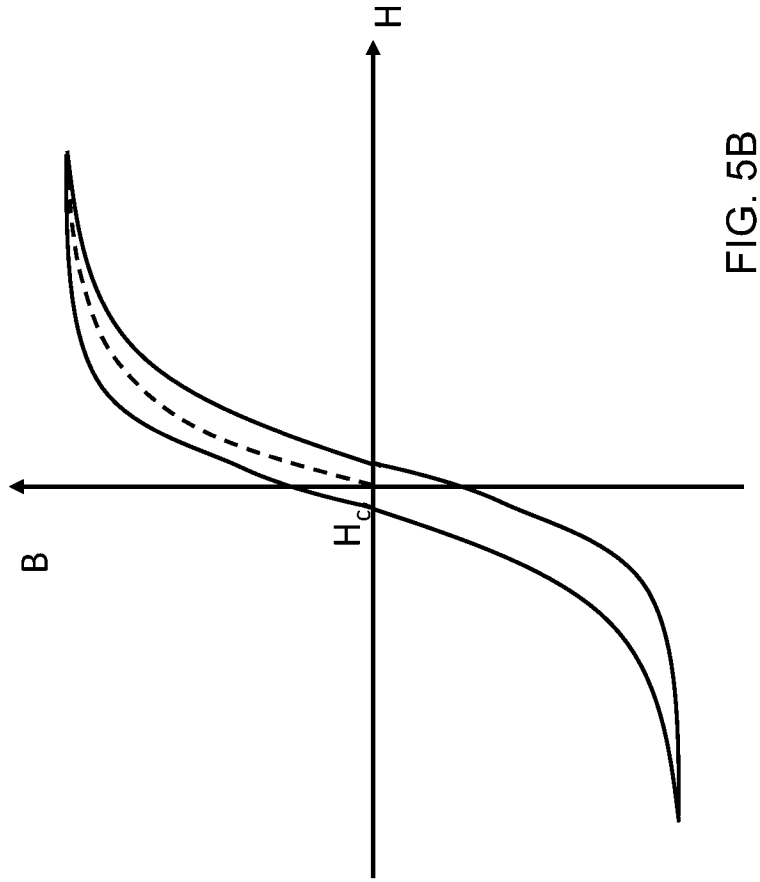

FIG. 5B

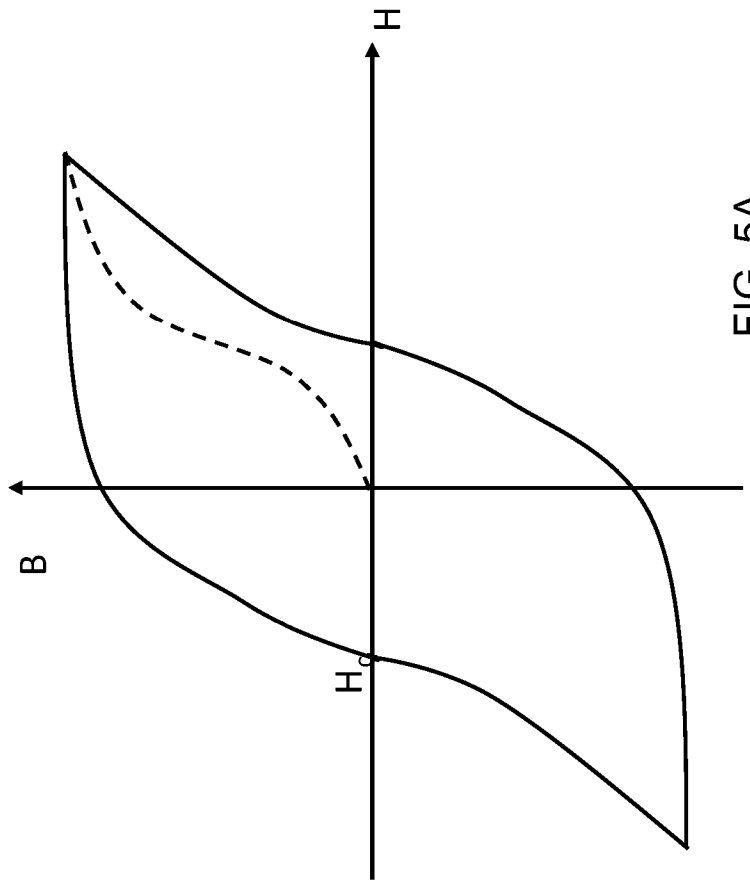

FIG. 5A

FIG. 6A

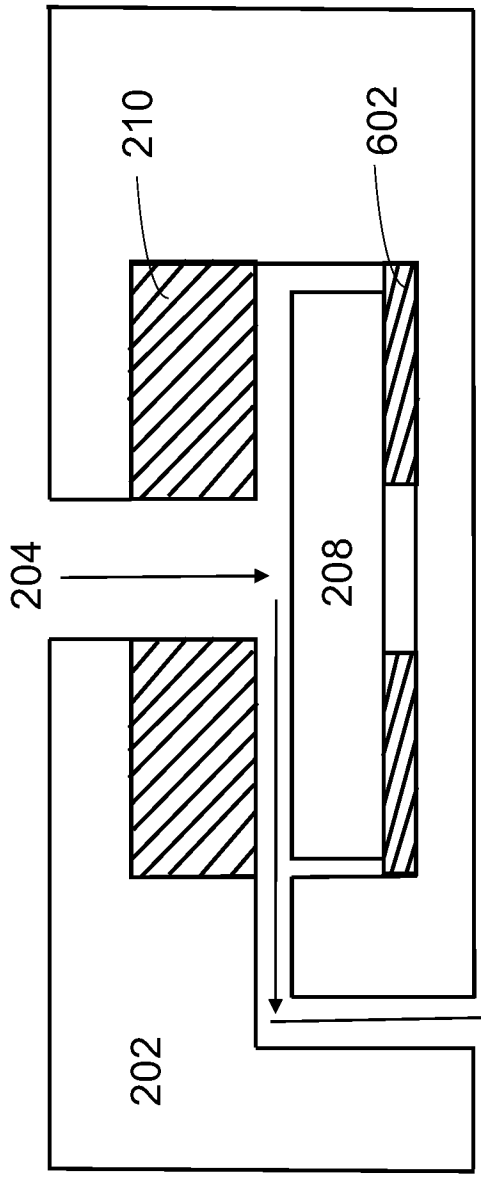

FIG. 6B

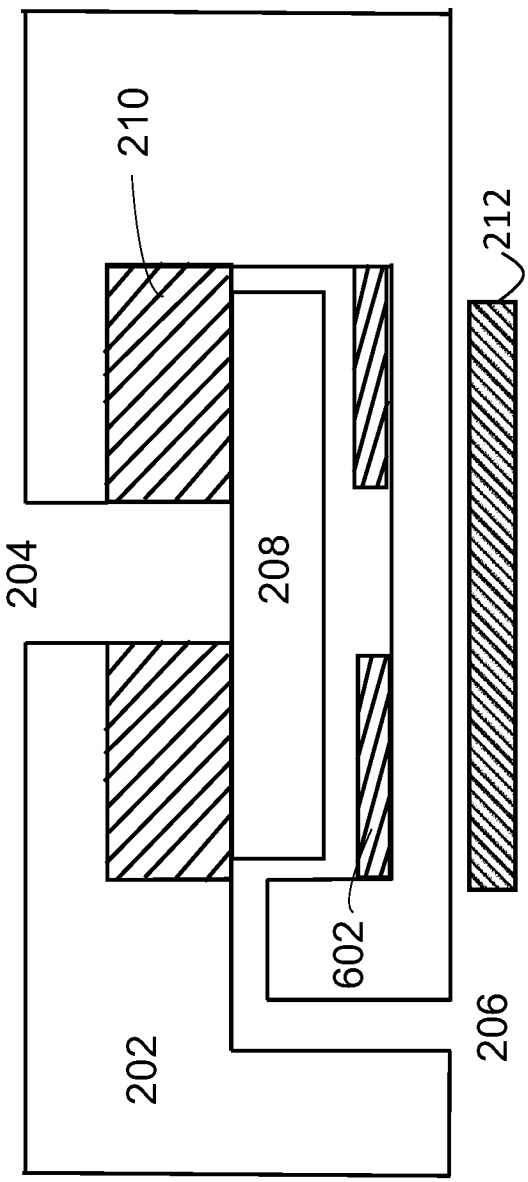

FIG. 7A

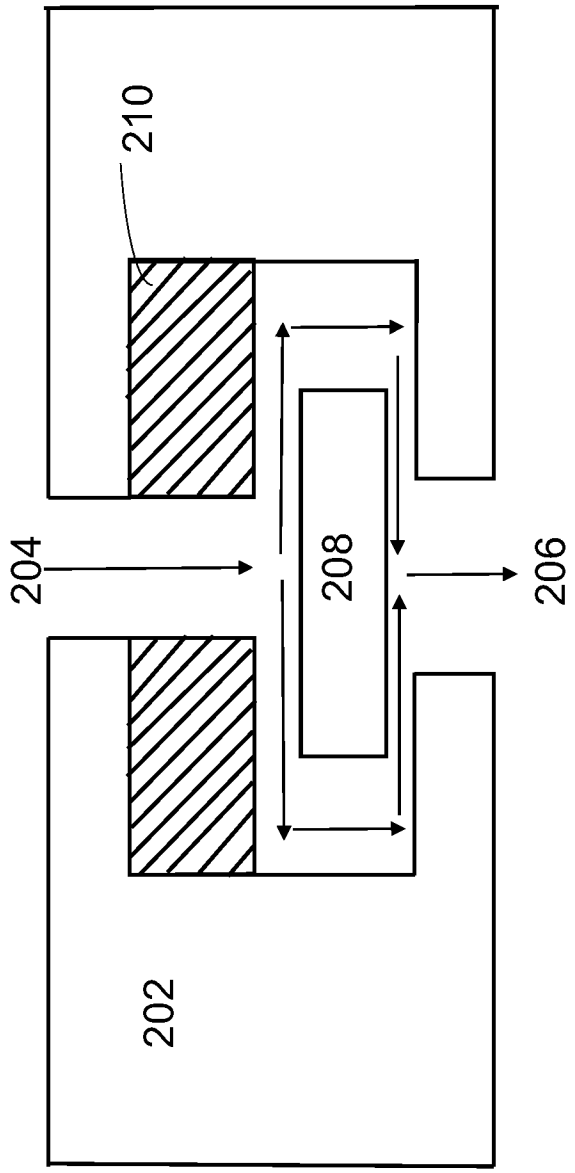

FIG. 7B

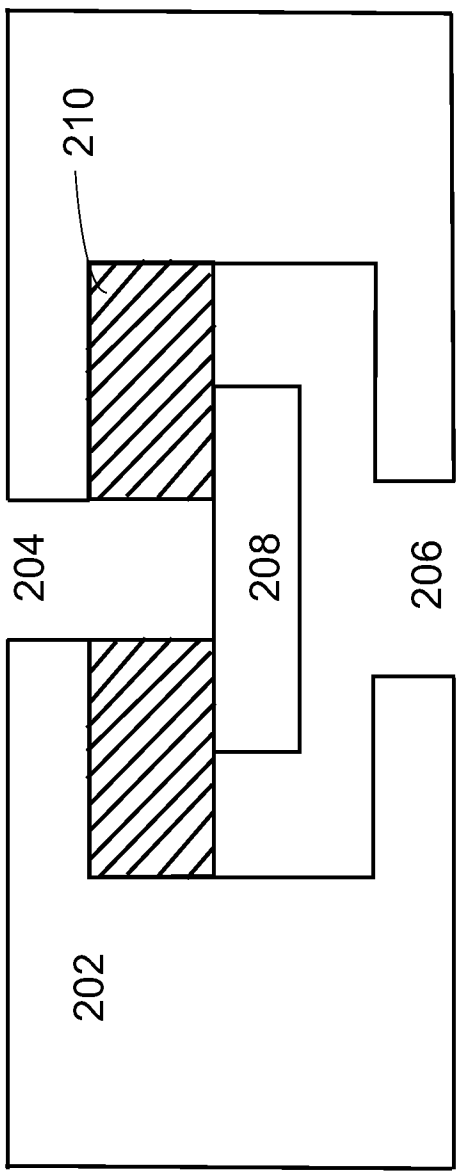

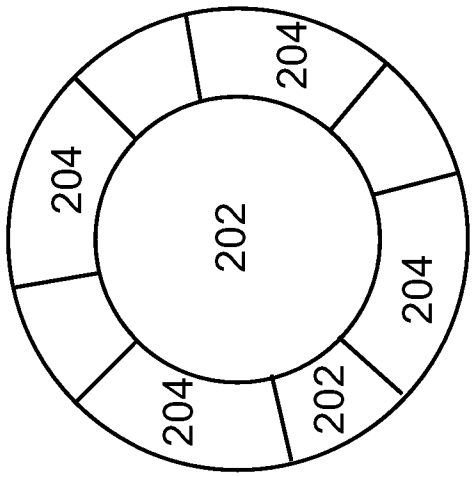

FIG. 8C

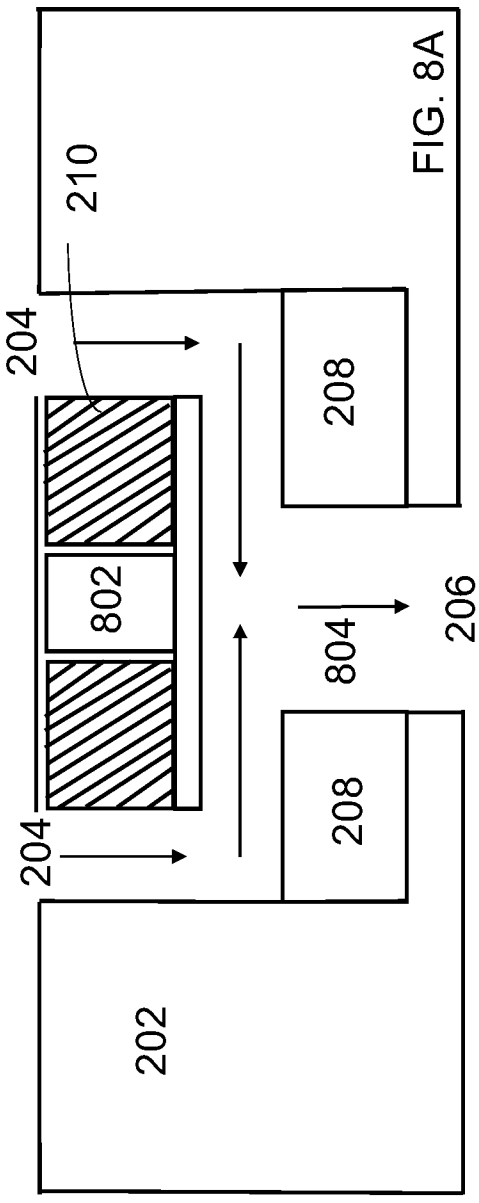

FIG. 8A

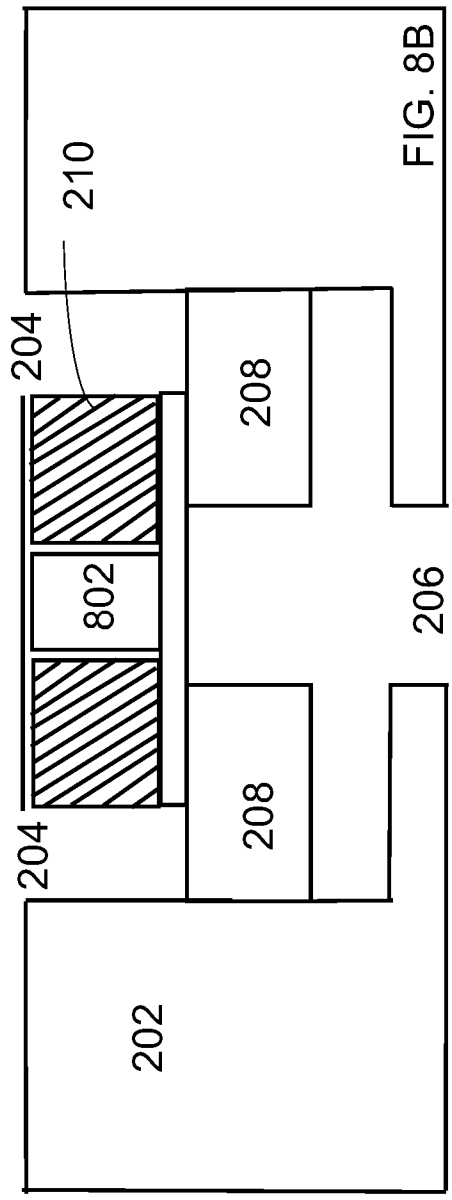

FIG. 8B

FIG. 9A

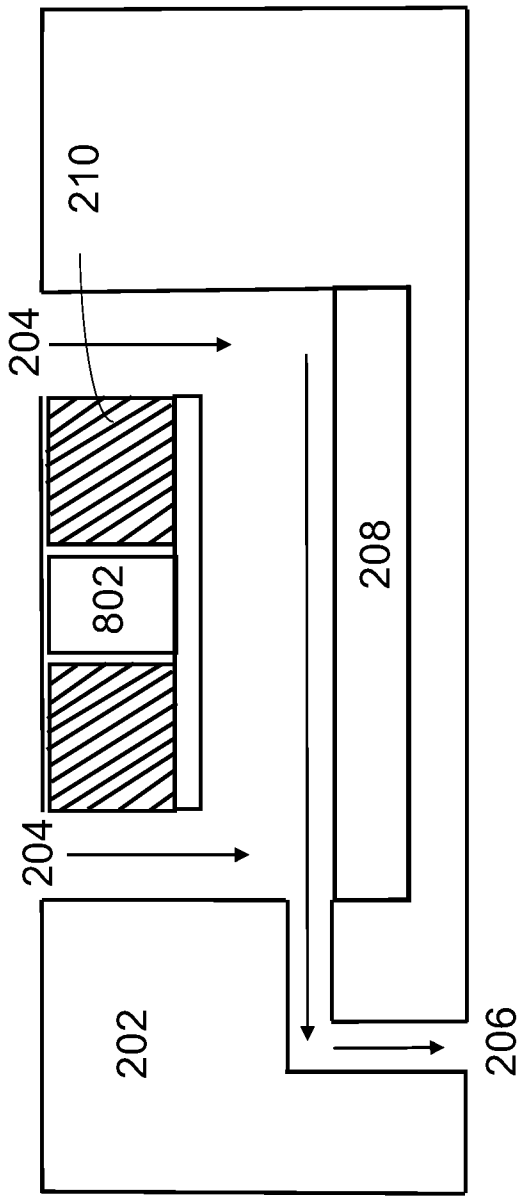

FIG. 9B

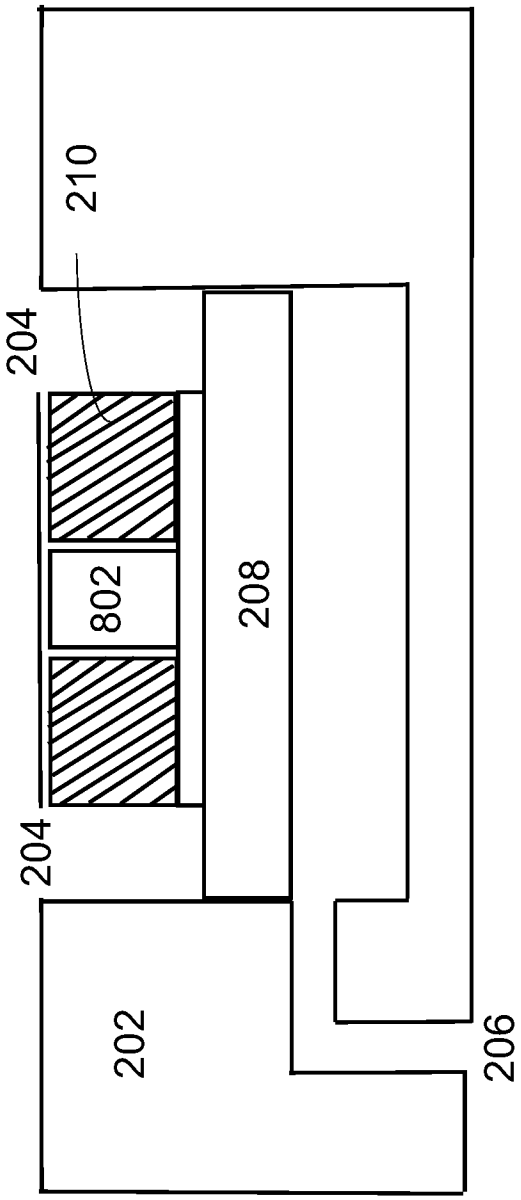

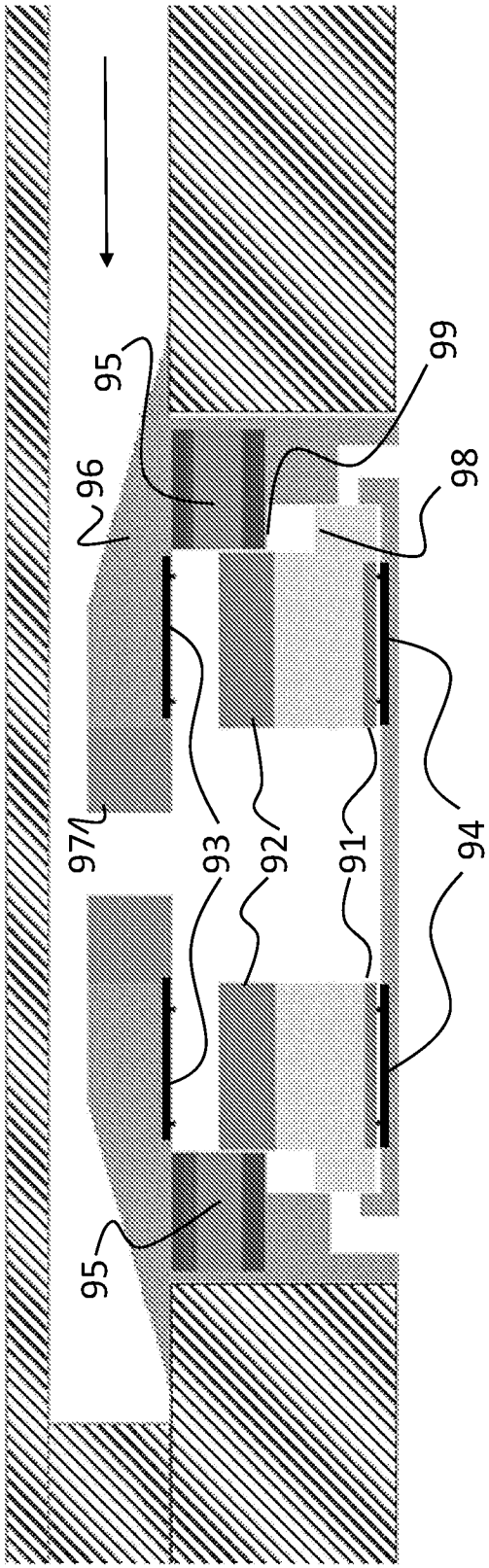

Fig. 9C

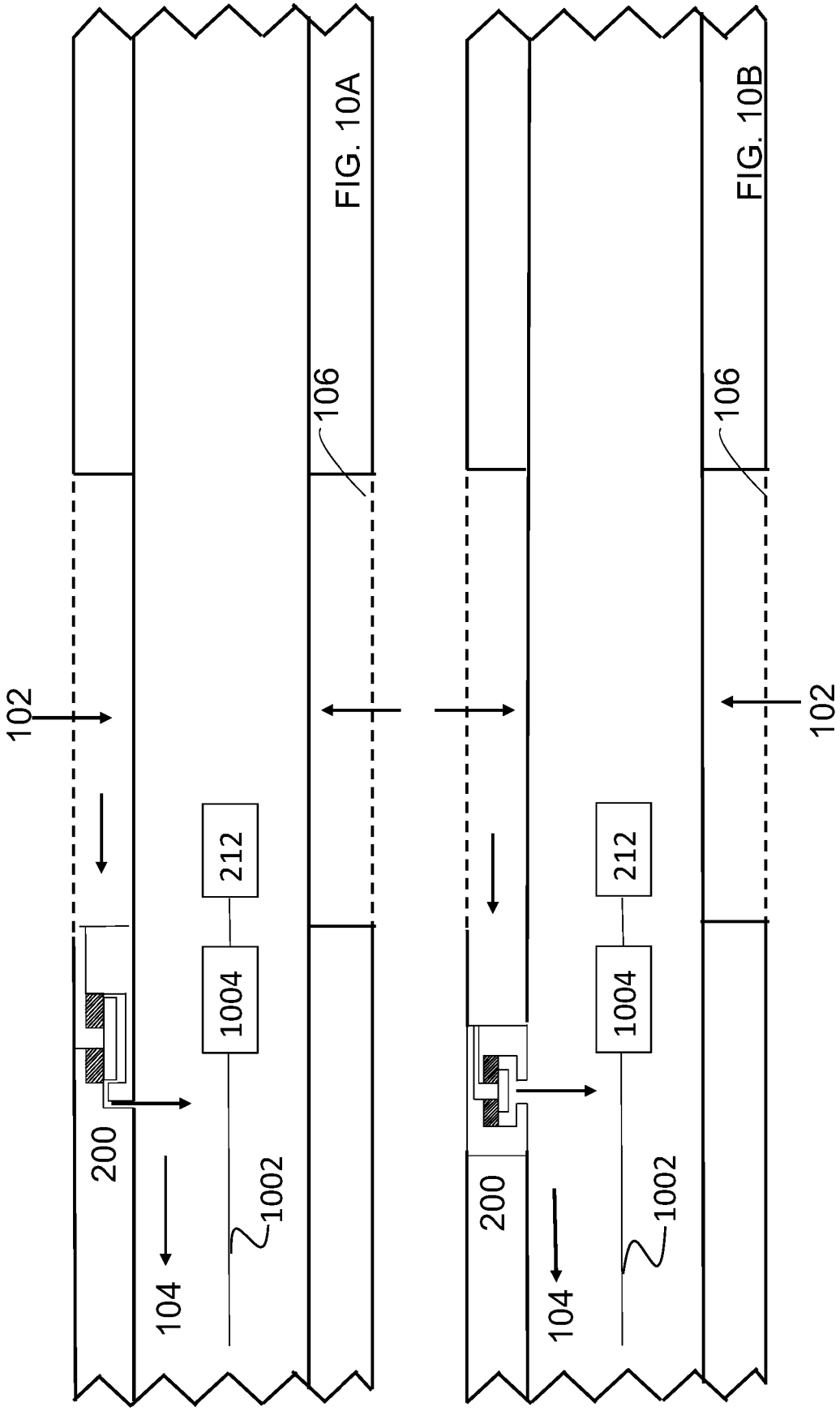

FIG. 10A

FIG. 10B

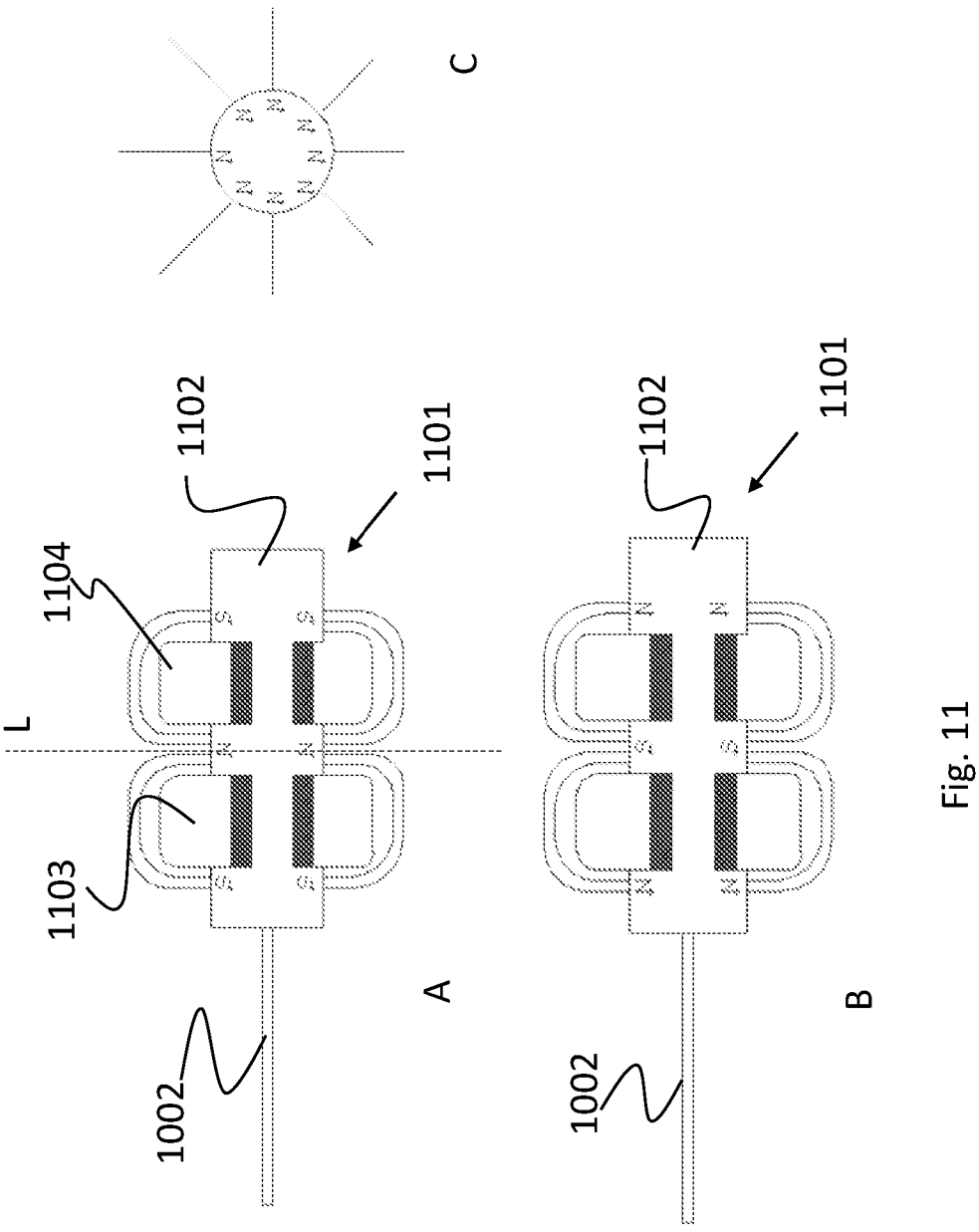

Fig. 11

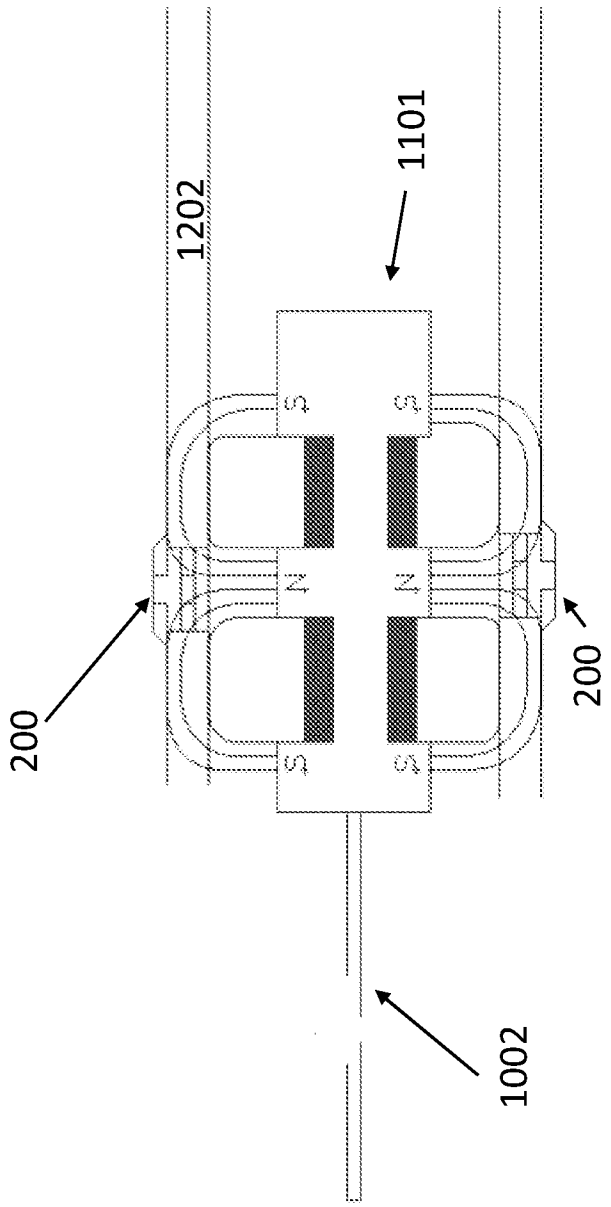

Fig. 12

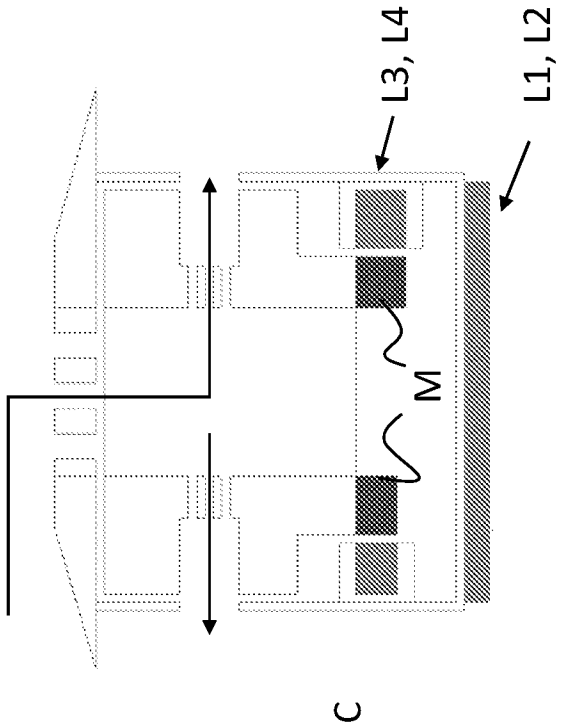

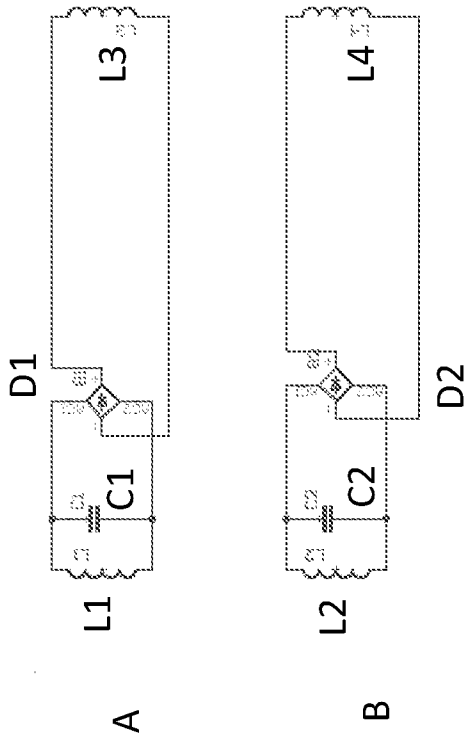

Figure 13

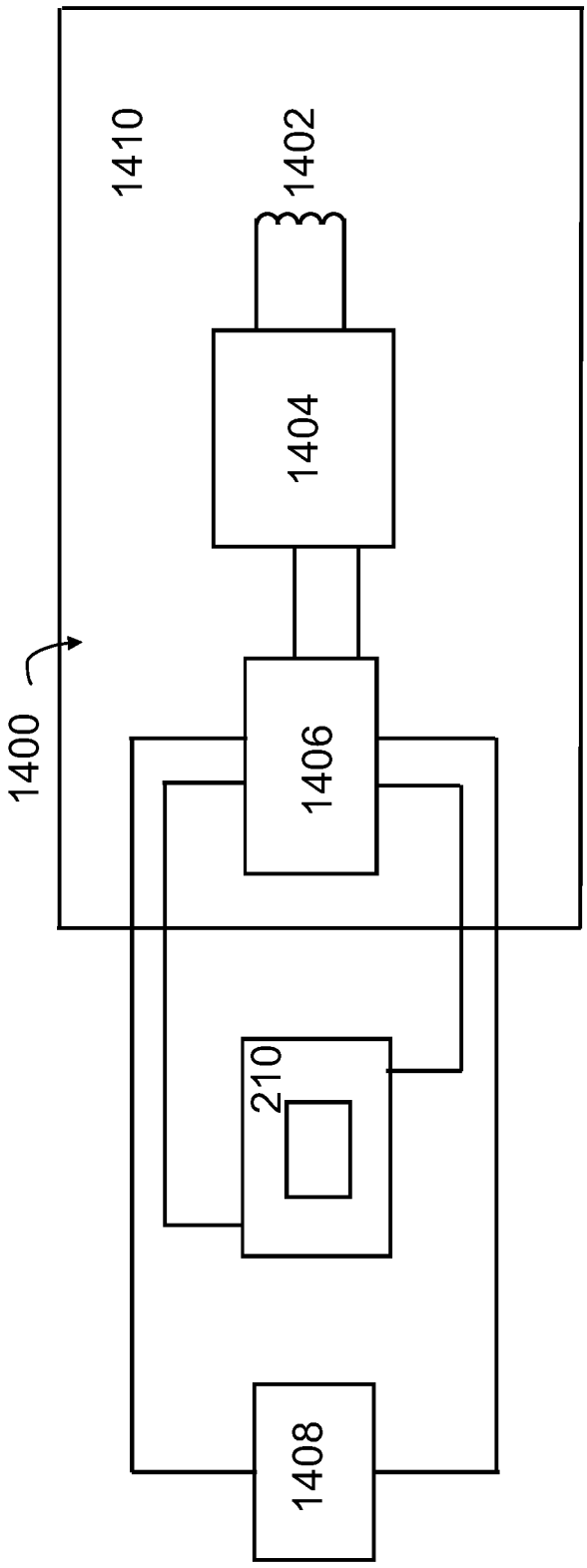

FIG. 14

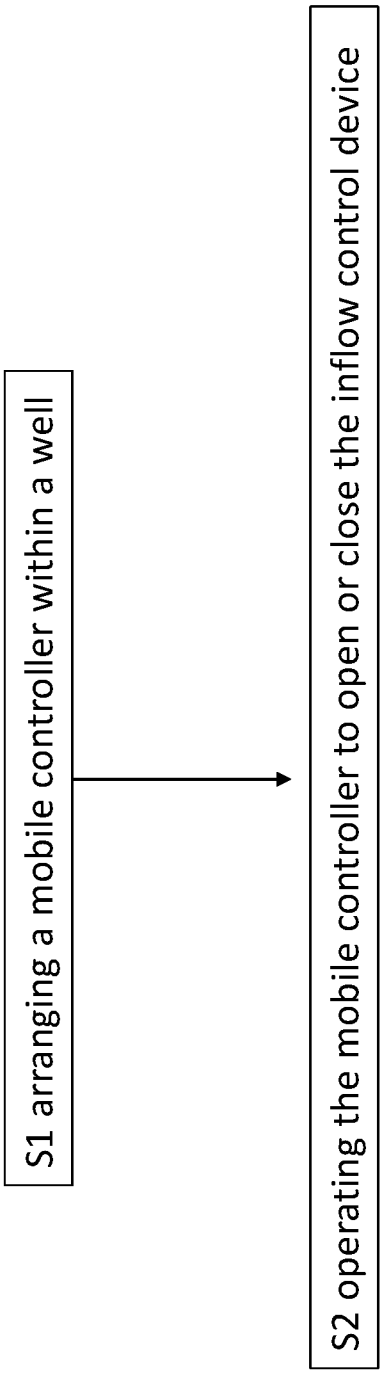
S1 arranging a mobile controller within a well
S2 operating the mobile controller to open or close the inflow control device

Fig. 15

INTERNATIONAL SEARCH REPORT

International application No.
PCT/NO2023/060025

A. CLASSIFICATION OF SUBJECT MATTER

E21B 34/06 (2006.01)i; E21B 43/12 (2006.01)i; F16K 31/02 (2006.01)i; F16K 31/08 (2006.01)i

According to International Patent Classification (IPC) or to both national classification and IPC

B. FIELDS SEARCHED

Minimum documentation searched (classification system followed by classification symbols)

E21B; F16K; H04B

Documentation searched other than minimum documentation to the extent that such documents are included in the fields searched

DK, NO, SE, FI: Classes as above

Electronic data base consulted during the international search (name of data base and, where practicable, search terms used)

EPODOC, WPI, FULL TEXT: ENGLISH

C. DOCUMENTS CONSIDERED TO BE RELEVANT

Category*	Citation of document, with indication, where appropriate, of the relevant passages	Relevant to claim No.
Y	US 2006/0124310 A1 (LOPEZ DE CARDENAS, J. et al.) 15 June 2006 (2006-06-15) Paragraphs [0007], [0026], [0029]-[0030] and [0032]-[0033]; figures 1-5B and 11A-11E.	1-15
Y	WO 2014/098883 A1 (HALLIBURTON ENERGY SERV INC) 26 June 2014 (2014-06-26) Paragraphs [0025], [0030], [0032]-[0033] and [0041]-[0043]; figures 1-7.	1-15
D,Y D,A	US 2015/0240600 A1 (FRIPP, M. L.; HOLDERMAN, L. W.) 27 August 2015 (2015-08-27) Paragraphs [0004]-[0006], [0062] and [0064]; figures 2-7B.	1-6, 12-15 7-11
A	US 2018/0155991 A1 (ARSALAN, M. et al.) 07 June 2018 (2018-06-07) Paragraphs [0038]-[0039], [0042]-[0044], [0060]-[0061] and [0072]-[0075]; figures 1A-9.	1-15
A	US 2020/0386073 A1 (JOUBRAN, J. N.; ALLEN, C.) 10 December 2020 (2020-12-10) Paragraphs [0001]-[0002], [0015] and [0024]-[0025]; figures 1-4.	1-15

☐ Further documents are listed in the continuation of Box C. ☑ See patent family annex.

* Special categories of cited documents:
"A" document defining the general state of the art which is not considered to be of particular relevance
"D" document cited by the applicant in the international application
"E" earlier application or patent but published on or after the international filing date
"L" document which may throw doubts on priority claim(s) or which is cited to establish the publication date of another citation or other special reason (as specified)
"O" document referring to an oral disclosure, use, exhibition or other means
"P" document published prior to the international filing date but later than the priority date claimed
"T" later document published after the international filing date or priority date and not in conflict with the application but cited to understand the principle or theory underlying the invention
"X" document of particular relevance; the claimed invention cannot be considered novel or cannot be considered to involve an inventive step when the document is taken alone
"Y" document of particular relevance; the claimed invention cannot be considered to involve an inventive step when the document is combined with one or more other such documents, such combination being obvious to a person skilled in the art
"&" document member of the same patent family

Date of the actual completion of the international search	Date of mailing of the international search report
28 September 2023	**28 September 2023**

Name and mailing address of the ISA/XN	Authorized officer
Nordic Patent Institute **Helgeshoj Allé 81,** **2630 Taastrup** **Denmark** Telephone No. **+45 43 50 85 00** Facsimile No. **+4543508008**	**LANGEN, Heidi** Telephone No. **+47 22 38 73 00**

INTERNATIONAL SEARCH REPORT
Information on patent family members

International application No.
PCT/NO2023/060025

Patent document cited in search report	Publication date (day/month/year)	Patent family member(s)	Publication date (day/month/year)
US 2006/0124310 A1	15 June 2006	CA 2529962 A1	14 June 2006
		DE 102005060008 A1	22 June 2006
		RU 2316643 C2	10 February 2008
		US 7387165 B2	17 June 2008
		CA 2529962 C	28 July 2009
WO 2014/098883 A1	26 June 2014	US 2014174750 A1	26 June 2014
		CA 2889819 A1	26 June 2014
		AU 2012397226 A1	23 April 2015
		SG 11201502982 A1	28 May 2015
		EP 2909430 A1	26 August 2015
		US 9169716 B2	27 October 2015
		AU 2012397226B B2	11 February 2016
		AU 2016202462 A1	12 May 2016
		MX 2015005021 A1	01 December 2015
		BR 112015011735 A2	11 July 2017
		SG 11201502982 B	19 July 2016
		MX 358058 B	03 August 2018
US 2015/0240600 A1	27 August 2015	US 9376892 B2	28 June 2016
US 2018/0155991 A1	07 June 2018	WO 2018104778 A1	14 June 2018
		WO 2018106642 A1	14 June 2018
		CA 3046075 A1	14 June 2018
		CA 3046164 A1	14 June 2018
		CN 110249107 A	17 September 2019
		EP 3548692 A1	09 October 2019
		EP 3551832 A1	16 October 2019
		CN 110582617 A	17 December 2019
		JP 2020501050 A	16 January 2020
		JP 2020501055 A	16 January 2020
		GC 11376 A	31 August 2020
		GC 11481 A	31 October 2020
		EP 3551832 B1	19 May 2021
		US 11028667 B2	08 June 2021
		CN 110249107B B	10 December 2021
		JP 7058280B B2	21 April 2022
		EP 3548692 B1	22 June 2022
		CN 110582617B B	19 July 2022
US 2020/0386073 A1	10 December 2020	WO 2020247709 A1	10 December 2020
		AU 2020287639 A1	11 November 2021
		CA 3136762 A1	10 December 2020
		NO 20211311 A	29 October 2021
		GB 2598054 A	16 February 2022
		BR 112021021806 A2	04 January 2022
		GB 2598054 B	07 June 2023