US00D912591S

(12) United States Design Patent

Tran

(10) Patent No.: US D912,591 S
(45) Date of Patent: ** Mar. 9, 2021

(54) **WHEEL**

(71) Applicant: **Wheel Pros, LLC**, Greenwood Village, CO (US)

(72) Inventor: **Peter Tran**, Buena Park, CA (US)

(**) Term: **15 Years**

(21) Appl. No.: **29/722,980**

(22) Filed: **Feb. 3, 2020**

(51) **LOC (13) Cl.** **12-16**

(52) **U.S. Cl.**
USPC **D12/209**

(58) **Field of Classification Search**
USPC D12/204–213; D21/563
CPC B60B 7/00; B60B 7/02; B60B 7/04; B60B 7/01; B60B 7/06; B60B 3/02; B60B 3/04; B60B 3/06; B60B 3/10; B60B 1/00; B60B 1/08; B60B 1/10; B60B 1/12
See application file for complete search history.

(56) **References Cited**

U.S. PATENT DOCUMENTS

D291,796 S	9/1987	Reid	
D361,975 S	9/1995	Weld	
D391,216 S	2/1998	Ballmann	
D408,775 S	4/1999	Shikado	
D453,492 S	2/2002	Laengerer	
D455,698 S	4/2002	Chung	
D467,212 S	12/2002	Noriega	
D470,094 S	2/2003	van Hooydonk	
D480,036 S	9/2003	Laengerer	
D482,996 S	12/2003	Sulahian	
D492,925 S	7/2004	Fitzgerald	
D496,317 S	9/2004	Kataoka	
D499,684 S	12/2004	Cheng	
D502,438 S	3/2005	Weld	
D504,859 S	5/2005	Sulahian	
D505,374 S	5/2005	Aleman	
D510,307 S	10/2005	Howes	
D523,797 S	6/2006	Gallert	
D524,212 S	7/2006	Phillips	
D524,220 S	7/2006	Scheu	
D528,495 S	9/2006	Truebsbach	
D542,209 S	5/2007	Pfeiffer	
D549,148 S	8/2007	Buschmann	
D569,777 S	5/2008	Chung	
D577,650 S	9/2008	Chung	
D579,845 S	11/2008	Chung	
D582,831 S	12/2008	Musser	
D598,357 S	8/2009	Chung	
D617,723 S	6/2010	Zhao	
D623,109 S	9/2010	Markefka	
D635,903 S	4/2011	Zhang	
D654,007 S	2/2012	Nissl	
D654,420 S	2/2012	Guay	
D660,771 S	5/2012	Mueller-Stolz	
D669,009 S	10/2012	Chung	
D686,961 S	7/2013	Chung	
D691,937 S *	10/2013	Chan	D12/209
D695,193 S	12/2013	Kong	
D698,298 S	1/2014	Cortes	
D698,300 S	1/2014	Chung	
D702,172 S	4/2014	Chung	

(Continued)

Primary Examiner — Stacia A Cadmus
(74) *Attorney, Agent, or Firm* — Eric Hanscom

(57) **CLAIM**

The ornamental design for a wheel, as shown and described.

DESCRIPTION

FIG. **1** is a perspective view of a wheel showing my new design; and,

FIG. **2** is a front view thereof.

In the drawings, broken lines shown in the drawings depict environmental subject matter only and form no part of the claimed design.

1 Claim, 2 Drawing Sheets

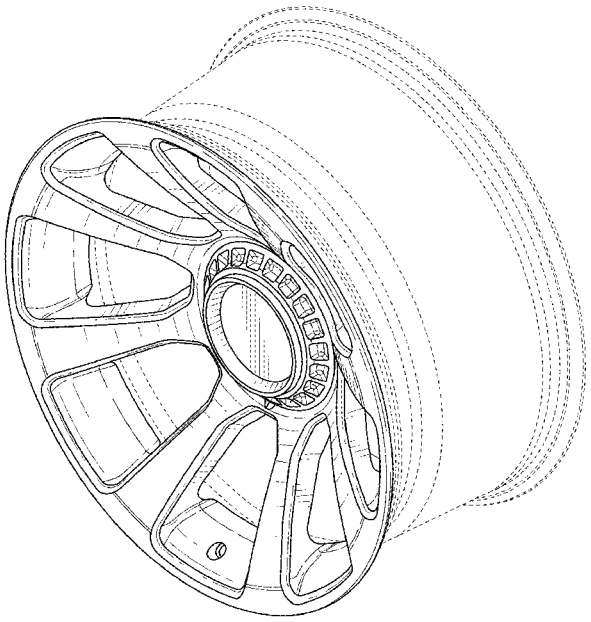

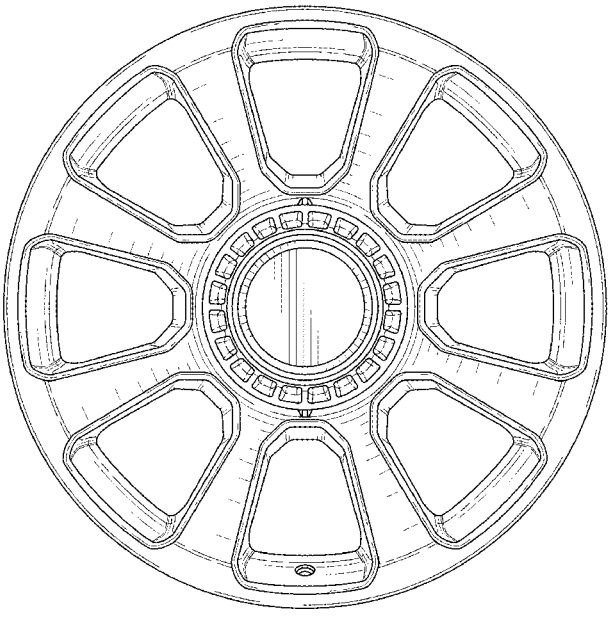

(56) **References Cited**

U.S. PATENT DOCUMENTS

D704,117	S		5/2014	Chung	
D704,617	S		5/2014	Chung	
D706,197	S		6/2014	Chung	
D707,167	S		6/2014	Chung	
D709,020	S		7/2014	Chung	
D713,316	S		9/2014	Song	
D714,207	S		9/2014	Kim	
D715,724	S	*	10/2014	Chung	D12/211
D717,709	S		11/2014	Valencia Pollex	
D719,893	S		12/2014	Kim	
D721,318	S	*	1/2015	Kim	D12/211
D731,946	S		6/2015	Chung	
D742,293	S		11/2015	Chung	
D746,753	S	*	1/2016	Johnson	D12/209
D751,481	S	*	3/2016	Chung	D12/209
D751,966	S	*	3/2016	Zhao	D12/211
D753,046	S		4/2016	Liffick	
D756,882	S		5/2016	Tirado	
D766,805	S		9/2016	Chung	
D769,785	S		10/2016	Wells	
D780,655	S		3/2017	Trim	
D782,385	S	*	3/2017	Zhao	D12/211
D821,284	S	*	6/2018	Tran	D12/209
D826,827	S	*	8/2018	Tran	D12/209
D833,360	S	*	11/2018	Kong	D12/209
D835,023	S	*	12/2018	Tran	D12/209
D842,185	S	*	3/2019	Chung	D12/209
D847,718	S	*	5/2019	Han	D12/209
D852,714	S	*	7/2019	Hale, Jr.	D12/213
D856,246	S	*	8/2019	Liffick	D12/209
D857,595	S	*	8/2019	Luo	D12/211
D865,615	S	*	11/2019	Tran	D12/209
D889,365	S	*	7/2020	Han	D12/209
D897,926	S	*	10/2020	Chung	D12/209
D901,353	S	*	11/2020	Tran	D12/209
D906,927	S	*	1/2021	Ma	D12/209

* cited by examiner

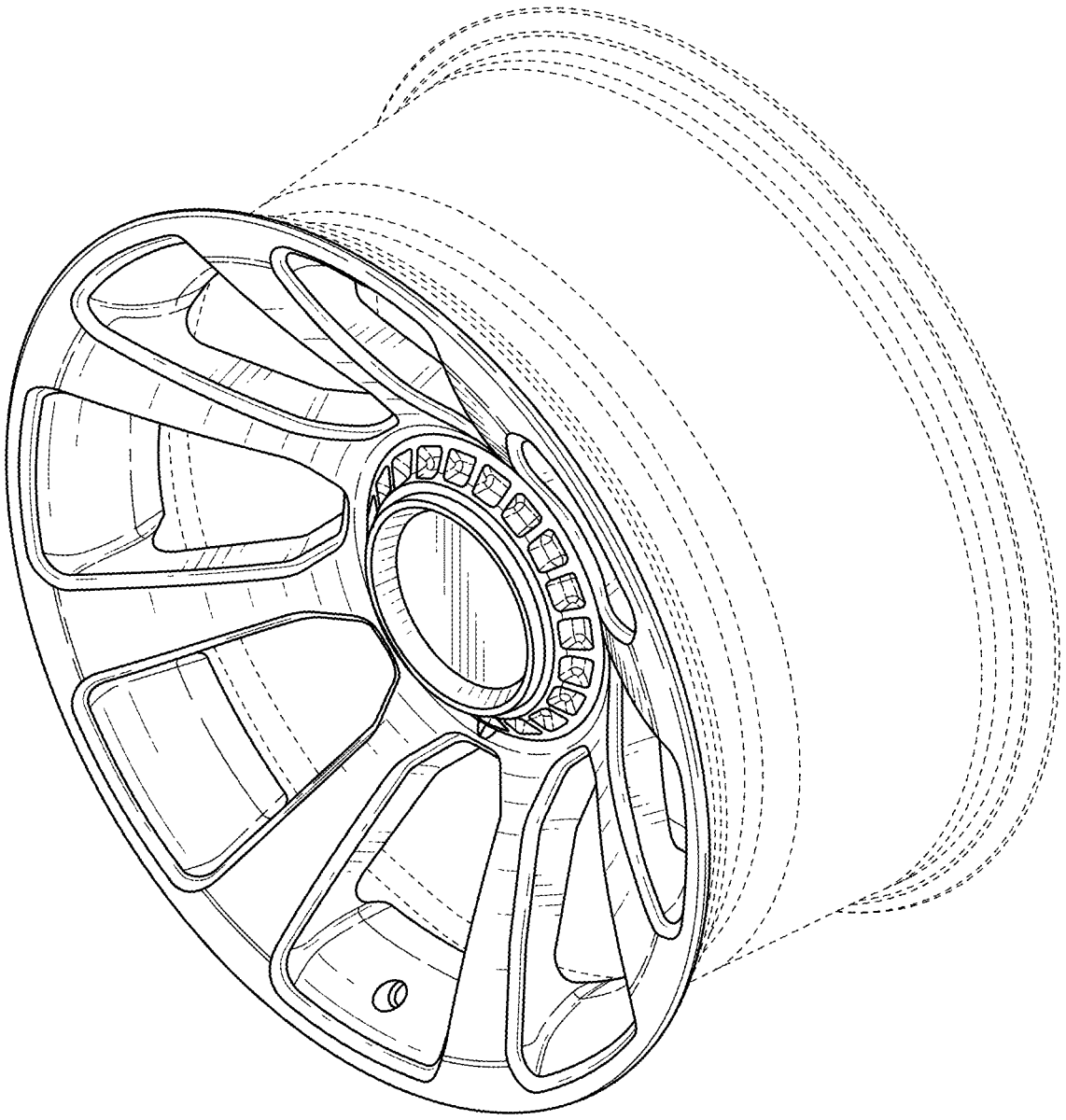

FIG. 1

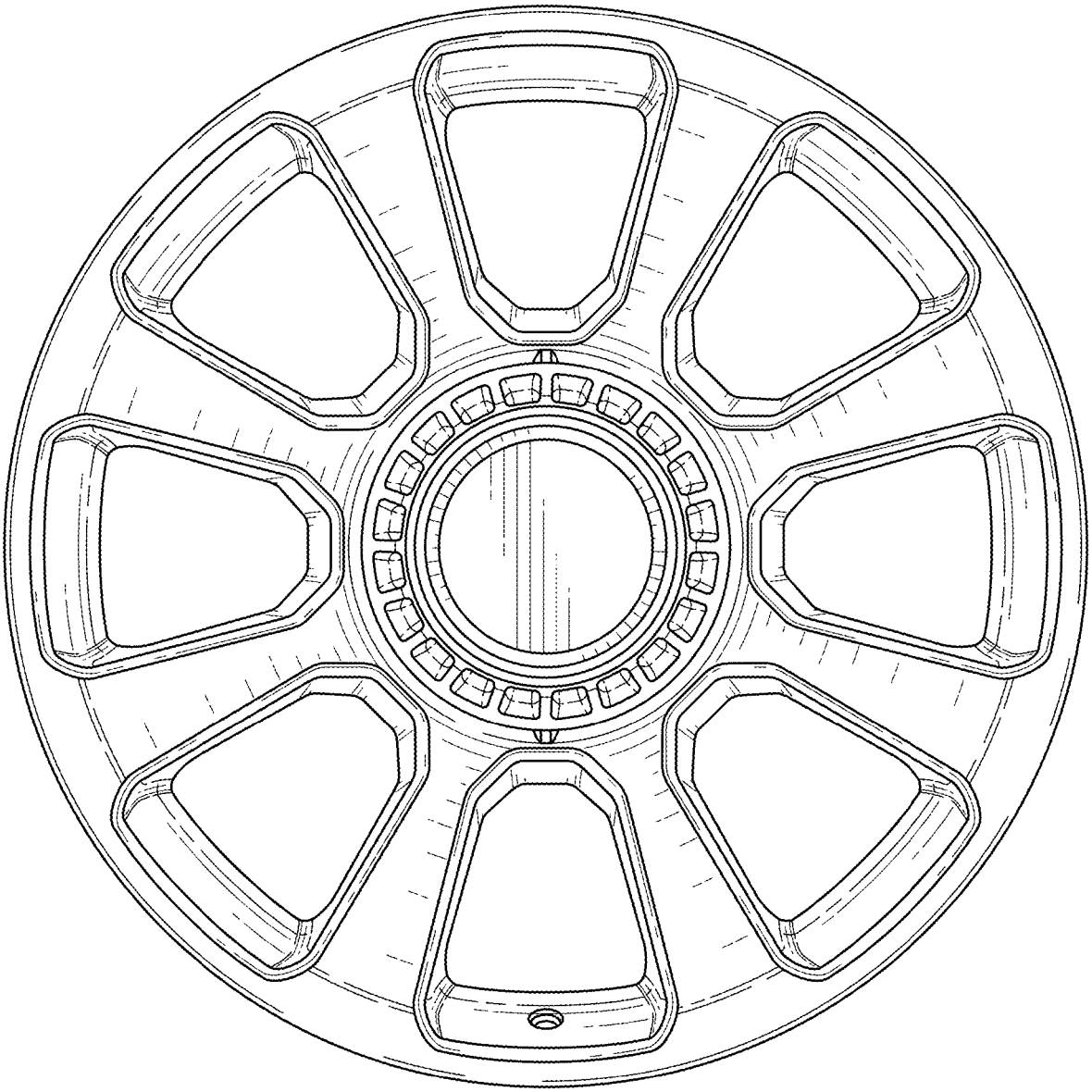

FIG. 2