April 22, 1958 W. H. SEED 2,831,588

FREIGHTAGE MEANS

Filed May 3, 1954 3 Sheets-Sheet 1

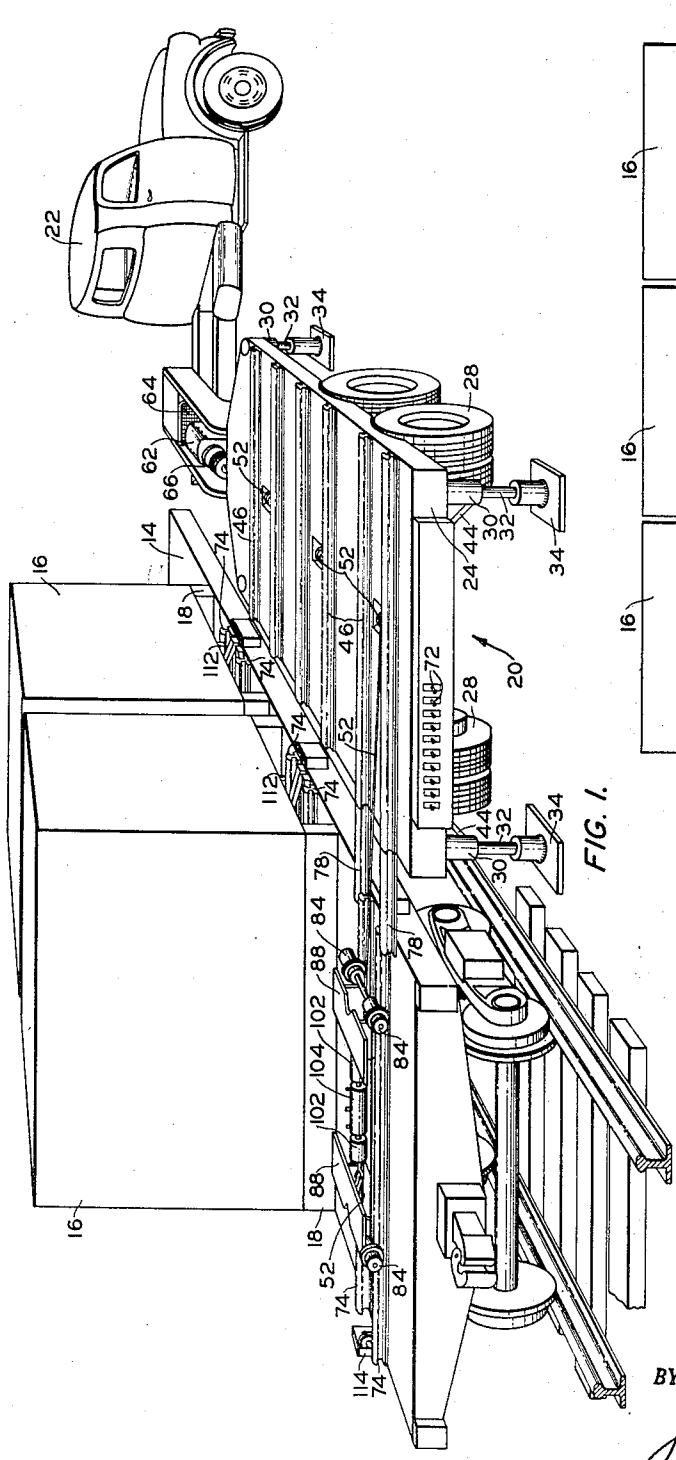

FIG. 1.

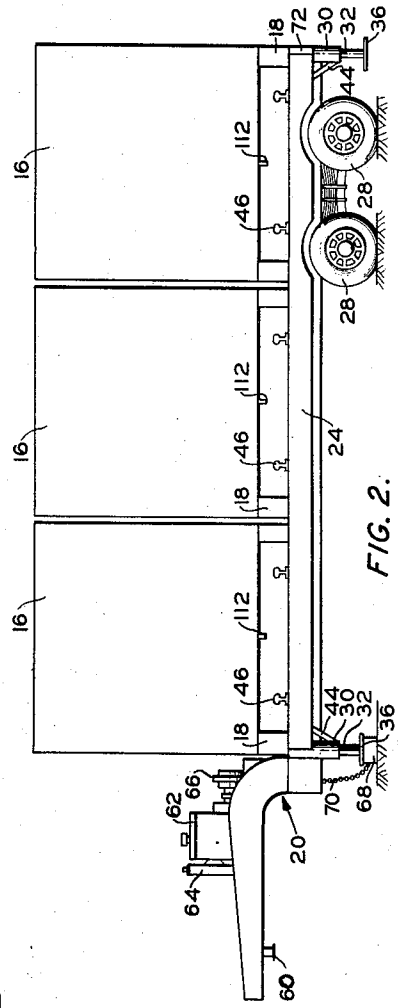

FIG. 2.

INVENTOR.
WILLIAM H. SEED

BY John H. Wilkinson
ATTORNEY

April 22, 1958 W. H. SEED 2,831,588

FREIGHTAGE MEANS

Filed May 3, 1954 3 Sheets-Sheet 2

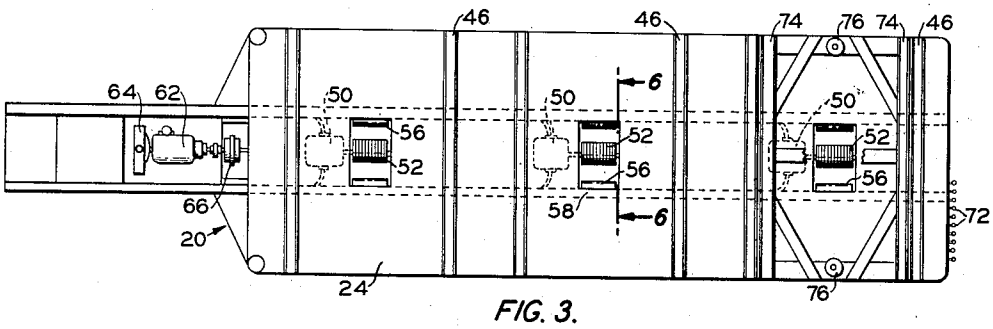

FIG. 3.

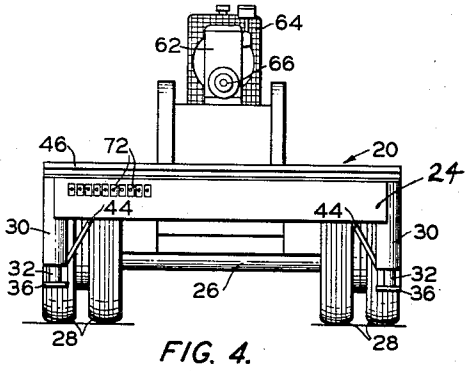

FIG. 4.

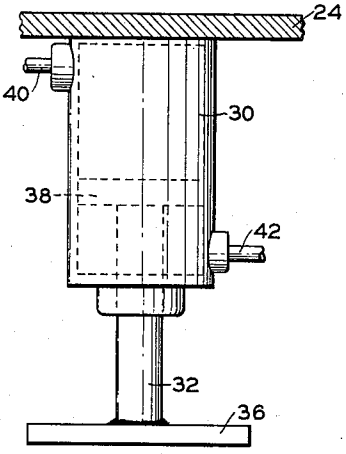

FIG. 5.

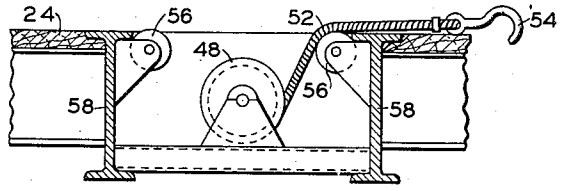

FIG. 6.

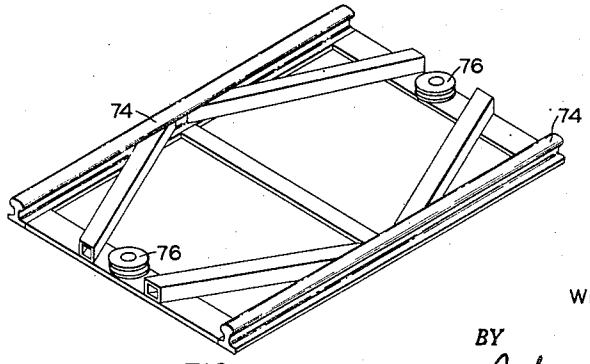

FIG. 7.

INVENTOR.
WILLIAM H. SEED

BY
John H. Widdowson
ATTORNEY

April 22, 1958 W. H. SEED 2,831,588

FREIGHTAGE MEANS

Filed May 3, 1954 3 Sheets-Sheet 3

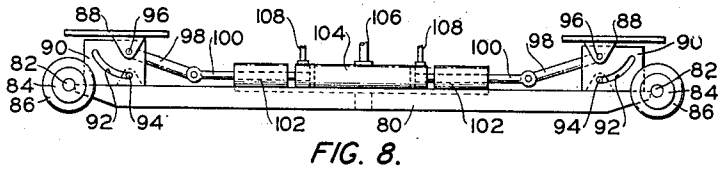

FIG. 8.

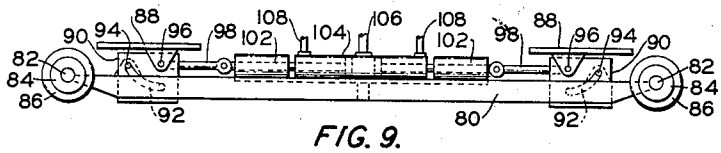

FIG. 9.

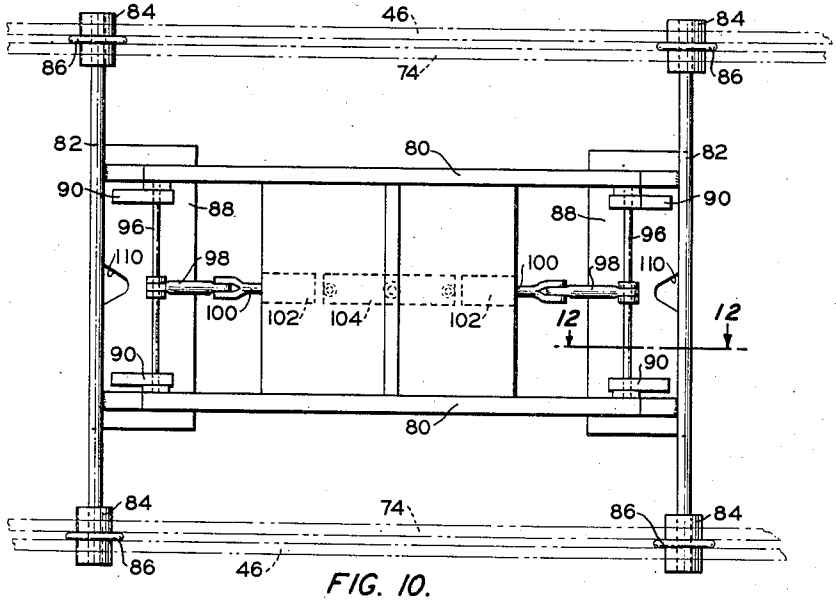

FIG. 10.

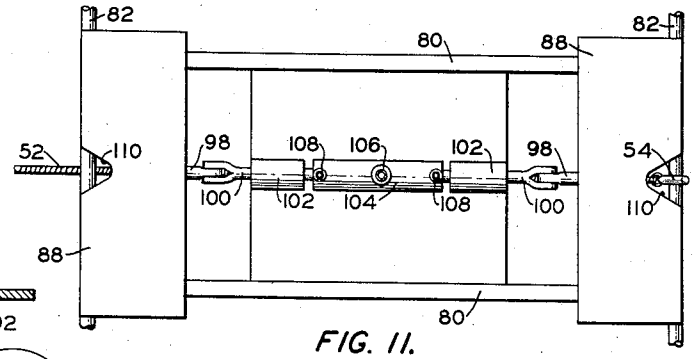

FIG. 11.

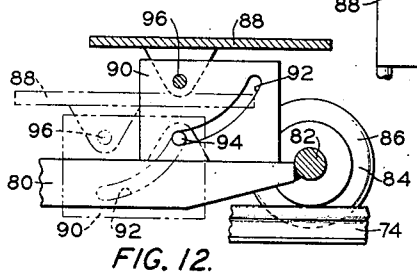

FIG. 12.

INVENTOR.
WILLIAM H. SEED

BY John H. Widdowson

ATTORNEY

United States Patent Office 2,831,588
Patented Apr. 22, 1958

2,831,588

FREIGHTAGE MEANS

William H. Seed, Wichita, Kans., assignor to Unibox Corporation, Inc., Wichita, Kans., a corporation of Kansas

Application May 3, 1954, Serial No. 427,158

3 Claims. (Cl. 214—38)

This invention relates to freightage. In a more specific aspect, this invention relates to new means for effecting the movement of goods by railway means and highway truck means. In a still more specific aspect, this invention relates to new highway truck and trailer means for moving goods. In still another specific aspect, this invention relates to new dolly means, particularly desirably used to move box means from a highway truck to a railway car and vice versa on rail means mounted on such highway truck and railway car.

The transportation of articles of manufacture, raw materials, commodities, etc., from shipping point to destination has always been a time consuming and relatively expensive proposition, particularly when the freight transported is an amount less than the established railway carload lots. The manufacturer is inconvenienced and finds it expensive to ship and pay for the shipment of lots of goods less than a carload, and the consuming public is penalized in having to pay for the man power and machines necessary to handle the relatively small load shipments. The public as a whole suffers quite considerably by the man power and capital literally wasted by the manner and means commonly employed today. Freight forwarding companies pick up small lots by truck, attempting to assemble a railway carload lot, thus gaining the advantage of carload shipping rates from the railroads. This is the present widely used method of handling small shipments. The handling of the goods at the manufacturer's place of business and rehandling at the freight forwarding companies' warehouses and at the railroad facilities is very inconvenient. New methods and means have been proposed to make freightage more economical and efficient, such as by the so-called piggy back transportation of highway trucks and trailers from city to city on specially designed railway cars, so that some of the loading and unloading is eliminated. While these means in many cases save time, man power and money in regard to handling less than carload lots of freight, it is not the solution to the problem, since very expensive special railway equipment must be employed, and the making of such a system practical would involve a substantially complete change of equipment by the various inter-connecting railroad carriers.

I have invented means which is particularly desirably used in freightage. The new combination apparatus of my invention for handling articles comprises a dolly having an elevatable platform adapted to raise and lower an article, such as a box having articles to be shipped therein, and support same. Highway truck means is used in the combination apparatus of my invention, and these truck means of my invention, such as a trailer, has rails mounted thereon which are adapted to receive the wheels of the dolly of my invention. Winch means are employed to move the dolly and articles supported thereon, and these winch means have connecting means for fastening to the dolly to move same. The winch means in a specific embodiment of my invention are preferably

mounted on and incorporated in the highway truck means. Other rail means are used, such preferably being portable and being adapted to fit on a railway car and receive the wheels of the dolly, so that the dolly can be moved from the highway truck means to the railway car and vice versa on the rails mounted on the highway truck and the railway car. Still other rail means are preferably used to bridge the gap between the highway truck and the railway car when they are in position for moving articles from one to the other. The dolly in use rides over the rails on the highway truck and those mounted on the railway car and those used to interconnect the vehicle mounted rails. The dolly apparatus of my invention is easy and inexpensive to manufacture, operate and maintain. It has a frame with wheels mounted thereon which are adapted to ride on rails of different gauge. An elevatable platform is mounted on the frame of the dolly, and motor means which is preferable mounted on the dolly is used to raise and lower the elevatable platform. The dolly means is adapted to fit under an article, such as a box containing articles to be shipped, elevate same, support same during its movement from one point to another and lower the article at its destination. In use in the cooperating freightage means of my invention, the dolly is used to raise a shipping box from its position of rest on the highway truck means or railway car, support the box during movement from car to truck or vice versa, and to lower the box again in position of rest on the vehicle to which it is moved. The boxes are made with a raised bottom and preferably have a skid base so that the dolly means of my invention will fit thereunder while the dolly is mounted on the rails.

The new freightage means of my invention has many advantages, chief among which are its versatility of use, inexpensiveness of manufacture, operation and maintenance, and it is almost wholly mechanically operated, requiring a minimum of man power. In addition, it is very safe to use both for the highway and railway operating personnel as well as for the manufacturers' shipping personnel. The new freightage means of my invention is designed for use with large sized shipping containers of varying lengths, for example and preferably boxes of a size so that five will fit side by side on the standard sized railway flat car. The latter sized boxes are preferred and very convenient for handling less than carload lot shipments, and it is the handling of such wherein I presently visualize my new means to be of greatest advantage. It has been found that boxes smaller than the present railroad box cars results in virtual elimination of damage loss and pilferage, and sets of articles of manufacture shipped together in a container arrive together. The smaller boxes are particularly advantageously used for shipment in lots exceeding 10 per cent of the railroad carload minimum.

In using the new means of my invention in freightage, the highway truck means of my invention is employed to pick up at point of shipping the boxes or containers containing the articles to be shipped, the boxes being loaded on the highway truck means either employing the new dolly means of my invention as will be described hereinafter, or by any other suitable means. The boxes or containers are hauled to a convenient railroad siding or freight yard loading point, and the highway truck means is moved alongside a railway car. By the means of my invention, the boxes are moved from the truck to the railroad car, the new dolly of my invention being used to raise, support during movement and lower the boxes to rest position on the railway car. The boxes are then hauled by the usual railroad means to the city or point of destination of the shipment. Another and like highway truck means is then used along with a like dolly

of my invention to move the box or boxes from the railway flat car to the truck. The truck then hauls the box or boxes to the consignee of the shipment. Hauling of the boxes from the cars of one railroad company to those of a connecting line in a terminal by the trailer means of my invention is very advantageous, since a great deal of switching time and expense is eliminated. Also, by the use of my invention for this purpose, the interchange of railroad cars is eliminated, and it is not necessary for the cars to leave the home road. Another large advantage of my invention is that it is very easy to transfer containers from a bad ordered railroad car, avoiding shipping delay. The use of my invention results in combining the advantage of the highway truck in pick up and delivery service with the advantage of the railroad low cost in hauling between terminals and reduces the railroad terminal cost and delay due to present methods of switching and physical rehandling of packages. Those familiar with freightage will readily see the tremendous advantages resulting from the combination freightage means of my invention and the new dolly and highway hauling means of my invention which makes the handling of articles to be moved so easy and efficient.

It is an object of my invention to provide new freightage means.

It is another object of my invention to provide new combination means for the transportation of goods by highway truck and railway means.

It is still another object of my invention to provide new highway hauling means embodied in a truck or trailer which is particularly desirably used in the transportation of shipping boxes containing articles to be shipped.

Still a further object of my invention is to provide new dolly means, which is adapted to and preferably used to raise a shipping box from position of rest, support same during movement of the dolly and lower the shipping box to a position of rest at destination, said dolly additionally being adapted to ride on rails of different gauge.

A further and overall object of my invention is to provide new freightage means which is particularly advantageously used in the transportation of goods which amount to less than the established railway carload lots.

Other objects and advantages of the new freightage means of my invention and the new dolly and highway hauling means of my invention will become apparent to one skilled in the art upon reading this disclosure.

Drawings accompany and are a part of this disclosure. Such drawings depict preferred specific embodiments of the new freightage and dolly means of my invention, and it is to be understood that these drawings are not to unduly limit the scope of my invention.

In the drawings, Fig. 1 is a perspective view of a preferred specific embodiment of my invention showing the highway truck means of my invention in relation to standard railway car means during loading and unloading of shipping container means handled by the means of my invention.

Fig. 2 is a side elevation view of a preferred specific embodiment of the new trailer means of my invention with shipping containers like those depicted in Fig. 1 mounted thereon.

Fig. 3 is a top plan view of the trailer means of my invention shown in Fig. 2, having portable rail means of my invention mounted thereon.

Fig. 4 is a rear elevation view of the trailer means of my invention depicted in Figs. 2 and 3.

Fig. 5 is an elevation view partly in cross section of preferred hydraulic jack means mounted on the preferred trailer means of my invention.

Fig. 6 is a view taken on line 6—6 of Fig. 3, showing preferred winch means incorporated in the preferred trailer means of my invention.

Fig. 7 is a perspective view of preferred portable rail means used in the combination freightage means of my

invention. This is the portable rail means shown mounted on the trailer in Fig. 3.

Fig. 8 is a side elevation view of a preferred specific embodiment of the new dolly means of my invention with the elevatable platforms of same in raised position.

Fig. 9 is a side elevation view of the dolly of Fig. 8 with the elevatable platforms thereof in lowered position.

Fig. 10 is a bottom plan view of the preferred dolly means of my invention.

Fig. 11 is a top plan view of the preferred dolly means of my invention omitting the wheels thereof.

Fig. 12 is a view taken on line 12—12 of Fig. 10.

Following is a discussion and description of my invention. Such discussion and description is made with reference to the drawings whereon the same reference numerals are used to indicate the same parts or structure. The following discussion and description is of preferred specific embodiments of the freightage means, dolly means and highway hauling means of my invention, and it is to be understood that such discussion and description is not to unduly limit the scope of my invention.

The new freightage means of my invention is used in combination with and cooperates with standard railway equipment, such as a standard railroad flat car 14 which is shown in Fig. 1 alongside the preferred highway transportation means of my invention. Shipping containers for holding the articles or material to be shipped and transported by my new means and by standard railway means can be of any suitable design, it having been found by me that box means 16 having a raised bottom and outer runners 18 to result in a so-called skid base is preferable, since such works well in combination with the other means of my invention and this type of box can be handled in the manufacturers' plant and shipping department and in the consignee's place of business by the usual truck lift means, for example a usual fork-lift truck. The boxes can be of suitable size. I have found that a desirable and convenient size of shipping box 16 is 8 ft. by 8 ft. by 8 ft. For materials of length greater than eight feet, boxes of sixteen and twenty-four feet length can be used. Also, eight boxes each 4 ft. by 4 ft. by 4 ft. have been found convenient because they easily nest on an eight foot square pallet which is handled by the means of my invention. I have found that boxes of eight foot width and multiples thereof up to twenty-four feet in length are convenient to handle on standard size trailers and railroad flat cars. The boxes 16 can be secured to the highway truck means and railway flat car during shipment in a safe and economical manner suitable to the carriers involved.

The new trailer means 20 of my invention is towed by truck tractor 22 of common and standard design. The trailer 20 has a flat bed 24 springedly mounted on axles 26 having wheels 28 mounted thereon. On each corner of bed 24 on the underneath side thereof is mounted a hydraulic jack having a cylinder chamber 30 and a piston rod 32. A reinforced foot 34 attached to the outer end of rod 32 can be employed, or a plate 36 such as shown in Figs. 2, 3, 4 and 5 can be welded to the outer end of rod 32 to form the jack foot. These hydraulic jacks are preferably of the double-acting type as shown, having a piston 38 and having actuating fluid supplied to the head end chamber and rod end chamber by conduits 40 and 42 respectively. Braces 44 have been found desirable to mount the jacks on trailer bed 24. The hydraulic jacks are used to adjust the height of the trailer bed 24 to any of the various bed heights of railroad cars, trailers, trucks, docks, and the like, and each of the four jacks are preferably individually controlled so that variations in ground level, etc., can be adjusted for.

Trailer bed 24 has rails 46 transversely mounted thereon in any suitable manner. Rails 46 are in pairs, three sets as shown or four sets of rails 46 having been found preferable. These sets of rails 46 are positioned on bed 24 to receive the wheels of dolly means which is described hereinafter.

Winch means are mounted in bed 24 between each set of rails 46, preferably in the middle of bed 24. These winch means have a drum 48 powered by motor means 50 which can conveniently be turbine-type hydraulic motors which run in either direction. A cable 52 with a hook member 54 on the outer end thereof is wound around and operated by drum 48. Rollers 56 are bracket mounted on I-beams 58 which form a part of trailer bed 24, and cable 52 of the winch means rides on these rollers 56 during operation of the winch. The winch means are used to pull a dolly supporting boxes 16 in an elevated position, such dolly being described hereinafter, and for other article moving operations.

On the forward end portion of the trailer means of my invention is mounted means for attaching the trailer to tractor 22, king pin 60 engaging a fifth wheel on the rear end portion of tractor 22. The goose neck used to attach the trailer to tractor 22 is preferably used to mount engine and pump means to supply hydraulic fluid to operate the winch means, the hydraulic jack means and hydraulic motor means on the dolly to be described hereinafter. In order that the loading and unloading mechanism of the new trailer means of my invention be self-operating, I prefer that engine 62 with radiator 64 be used to power pump 66 which is used to maintain pressure on the operating fluid of the hydraulic fluid system. Any suitable engine means and pump means can be used. The engine and pump means for the hydraulic fluid system make the trailer independent of the tractor for power, which releases the tractor for shuttle service and permits one man to load several trailers in succession at the same location.

Because of variation in the height of railway equipment, dock means, trailers, etc., I have found it desirable to mount removable block members 68 on the corners of trailer bed 24 and chained thereto by chain means 70, such means shown in Fig. 2. These block members 68 are used to fit under the hydraulic jack means to provide for additional height adjustment of the trailer means. The valve mechanism for operating the hydraulic motor means 50, hydraulic jack means and dolly motor means (described hereinafter) can be located on the trailer in any convenient place. I have found that the common four-way valve mechanisms and operating arms 72 for double-acting hydraulic motors can be located on the rear end of the trailer as shown where they can be easily reached and identified. I have found it desirable to individually control the four hydraulic jacks, the three hydraulic motors 50 and the three later described dolly motors, which accounts for the ten valve arms 72 depicted on the drawings.

The new freightage means of my invention requires no change in existing railroad flat car equipment, and in order to accomplish this, portable rail sets are employed, preferably those shown in perspective in Fig. 7. These portable rails are of narrower gauge than those mounted on truck bed 24 and have rail members 74 and preferably have pulleys 76 mounted thereon in any suitable manner on the end connecting members as shown. These pulleys are sized and adapted to receive cable 52 of the winch means, and in many instances, these pulleys can be used for pulling dolly means and boxes 16 thereon from the trailer to the railway flat car or to a dock or another trailer, that is, with the portable rails on the flat car, etc., and cable 52 running over to the flat car around a pulley 76 and back to a dolly on the trailer means. The gauge of the portable rails is preferably such that they will fit in rest position between a set of rails 46 on trailer bed 24. The portable rails are stored in this position when not in use to load or unload the railway car or the trailer. In this connection, the use of the portable rails on a loading or unloading dock has been found suitable and easy of operation. As shown in Fig. 1, the portable rails fit under the bottom of box 16 between runners 18 when they are in use to move boxes 16.

The new dolly means of my invention is used with rails 46 and 74 to move boxes 16 from trailer to railway car and vice versa, or from trailer or railway car to a dock and vice versa. In this connection, inter-connecting rail members 78 of any suitable design are used to bridge the gap between trailer bed 24 and railway flat car 14. I have found two single portions of rail as shown in Fig. 1 of the drawings suitable for this purpose, and easy to store and handle. The new dolly means of my invention has a frame 80 on which are rigidly mounted axles 82. Wheels 84 are mounted on the outer ends of axles 82 to turn thereon. These wheels have flanges 86 in their middle portions and are adapted to ride on rails of two different gauges as shown in Fig. 10, namely, portable rails 74 and rails 46 which are fixed to bed 24 of the trailer, so that the dolly means will move easily from one gauge of rail to the other. Elevatable platforms 88 are mounted on each end portion of the dolly means, and these platforms have downward projected members 90 on the sides thereof having curved slots 92 therein to guide the platform 88 upwardly and outwardly in elevation operation, and downwardly and inwardly in retraction or lowering operation. Fin guide members 94 project from brackets mounted on frame 80 through the curved slots 92, and govern the movement of platforms 88 along with the curved slots 92. Rod means 96 is attached to move with platform 88 by bracket means mounted on platform 88 and linking members 98 are pivotally secured to rods 96 in the middle portion thereof. The other end of linking members 98 are pivotally secured to piston rods 100 which are guided to move horizontally and longitudinally by bearing guide means 102 mounted on frame 80. Motor means 104 is mounted on frame 80, such powering piston rods 100, and such preferably having head means common to the pistons on both rods. Conduit 106 supplies hydraulic fluid to the common cylinder head means, and conduits 108 supply hydraulic fluid to the rod ends of the motor means. I have found it desirable that platforms 88 raise and lower in unison. Fig. 12 shows in detail the positions of platforms 88 when in elevated position (solid lines) and when in lowered position (dotted lines). Also, Fig. 8 shows the dolly means with platforms 88 in elevated position, and Fig. 9 shows the dolly means with the platforms in lowered position. Platforms 88 preferably have centrally located notches 110 in their outer portions to receive king pins 112 of boxes 16 when in elevation operation. This is highly desirable because it assures securing of boxes 16 on the dolly, and aids in supporting box means 16 on the dolly means.

Bracket mounted auxiliary pulley means 114 shown in Fig. 1, and mounted in a usual railroad flat car stake hole, has been found desirable and convenient to use in the combination freightage means of my invention. These auxiliary pulley means are particularly advantageously used when moving the box means 16 from the trailer means to railroad flat car 14. Winch line 52 is run over car 14 through the pulley of pulley means 114 and back to the dolly where hook 54 is fastened to a dolly axle. Winding the winch by turning drum 48, results in moving the dolly over the rails from the trailer to railroad car 14. In some instances, this is necessary, especially if the portable rails 74 do not provide sufficient backing for the pull of the winch when pulley 76 of the portable rail means is used for this purpose.

From the description of the apparatus and the discussion set forth hereinbefore, the operation of the apparatus of my invention is believed clear. The dolly means, portable rail means, auxiliary pulley means 114 and linking rails 78 can be stored on and carried by the self-operating loading and unloading trailer means of my invention, so that no modification to the usual railroad flat car means is necessary. In addition, the new trailer means of my invention is provided with jacks so that it can be used with railroad cars of different heights and with loading and unloading docks of different heights. In moving a

box 16 from car 14 or a dock onto the trailer means, the hook 54 of the winch means is connected directly to the axle 82 of the dolly which is farthest from the trailer, preferably prior to rolling the dolly with platforms 88 in lowered position under the box on portable rails 74. The platform 88 of the dolly means are raised, elevating the box, which is automatically positioned on platforms 88 by notches 110 of platforms 88 receiving king pins 112 of the box. This centers box 16 on the longitudinal axis of the dolly. Rollers 56 permit operation from either side of the trailer. Cable 52 is wound on drum 48 of the winch to pull the box onto the trailer.

As will be evident to those skilled in the art, various modifications of this invention can be made or followed in the light of this disclosure and discussion, without departing from the spirit or scope of the disclosure or from the scope of the claims.

I claim:

1. Apparatus for handling freight which comprises, in combination: a plurality of dollies having four wheels and an elevatable platform in each end portion thereof and means to elevate said platforms in unison, said dollies adapted to fit beneath a box, elevate same, support same during movement and lower same at destination; a highway trailer, said trailer having an elongated flat bed, a plurality of sets of rails transversely mounted thereon adapted to receive the wheels of said dollies, hydraulic jack means mounted on each of the corners thereof adapted to vary the height of said bed, a winch having means on the cables thereof to connect to said dollies to move same mounted in said bed between each of said sets of rails and means to operate said winches, and a block member movably secured to each of the corners of said trailer adapted to fit under said jacks; a plurality of portable sets of rails, each set adapted to fit transversely on a railway flat car and receive the wheels of said dollies and of gauge to fit in rest position between a set of said trailer rails, said portable rail sets having pulley means in each end portion thereof; connecting rail means adapted to bridge gaps between said trailer rails and said portable rails when the latter are mounted on a railway flat car; and pulley means adapted to be removably mounted on a railway flat car and to receive said winch cables.

2. Apparatus for handling freight which comprises, in combination: a dolly having wheels adapted to ride on rails of different gauge and elevatable platform means adapted to raise and lower an article and support same; highway truck means, said truck means having a substantially flat bed, a pair of rails mounted thereon adapted to receive the wheels of said dolly, jack means adapted to vary the height of said bed, a winch mounted thereon having means adapted to connect to said dolly to move same and means to operate said winch; a portable pair of rails adapted to fit on the bed of a railway car and receive the wheels of said dolly, said portable rails being of gauge to fit between said pair of truck means rails; and rail means adapted to bridge a gap between said truck means rails and said portable rails when the latter are mounted on a railway car.

3. The apparatus of claim 2 having pulley means adapted to be removably mounted on a railway car to receive the cable of said winch.

References Cited in the file of this patent

UNITED STATES PATENTS

453,117	James	May 26, 1891
1,104,533	Miller	July 21, 1914
1,302,925	Holmes	May 6, 1919
1,410,103	Lightner et al.	Mar. 21, 1922
1,824,201	Eisenberg	Sept. 22, 1931
1,933,211	Flowers	Oct. 31, 1933
1,994,399	Moreau	Mar. 12, 1935
2,004,095	Hankins et al.	June 11, 1935
2,150,371	Furnish	Mar. 14, 1939
2,512,798	Hodges	June 27, 1950
2,626,065	Sanders et al.	Jan. 20, 1953
2,691,450	Rosenbaum	Oct. 12, 1954

FOREIGN PATENTS

355,399	France	Aug. 8, 1905
445,239	Great Britain	Apr. 6, 1936
478,077	Germany	June 19, 1929
623,360	Germany	Dec. 19, 1935