Oct. 16, 1951 A. J. COLLINS 2,571,542

CLOSURE FOR POURING SPOUTS, CONNECTED THERETO BY A WEAKENED, FRANGIBLE ELEMENT

Filed Dec. 10, 1947

Fig. 2

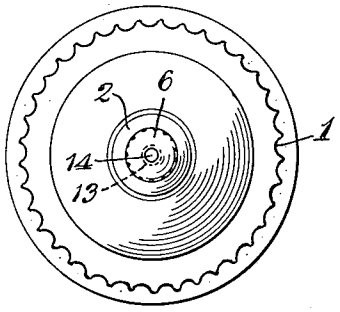

Fig. 1

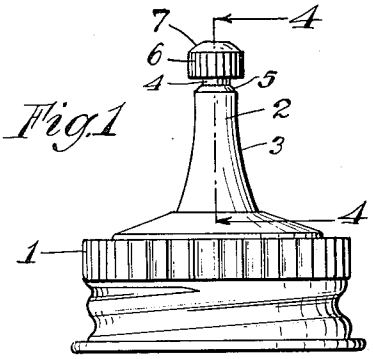

Fig. 4

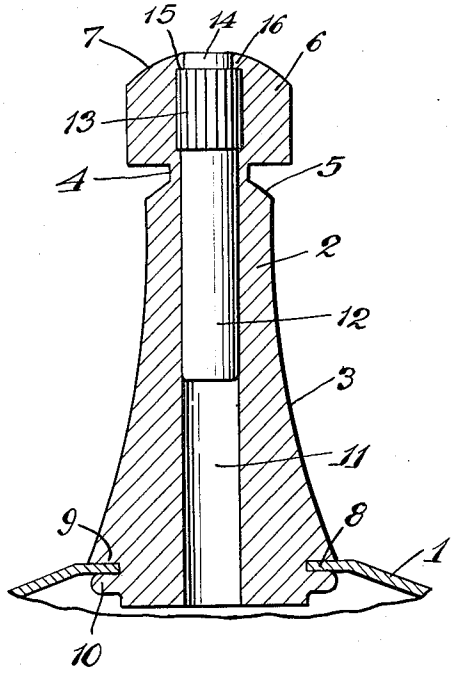

Fig. 5

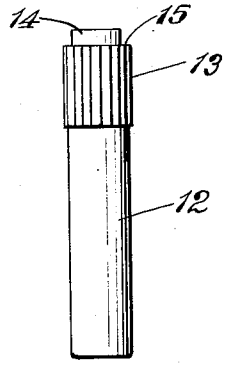

Fig. 3

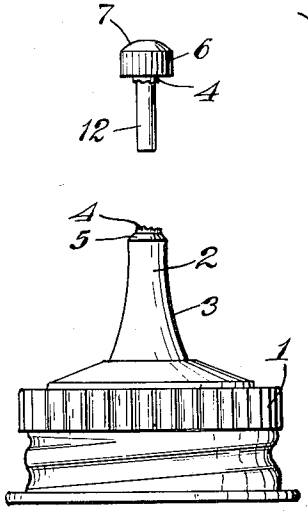

Inventor
Arthur J. Collins
by Parker & Carter.
Attorneys

Patented Oct. 16, 1951

2,571,542

UNITED STATES PATENT OFFICE

2,571,542

CLOSURE FOR POURING SPOUTS, CONNECTED THERETO BY A WEAKENED, FRANGIBLE ELEMENT

Arthur J. Collins, Chicago, Ill.

Application December 10, 1947, Serial No. 790,904

5 Claims. (Cl. 222—541)

1

This invention relates to a cap or nozzle for containers. It has for one object to provide a closure which is totally closed and will remain closed in transit, and which may readily be opened when desired.

Another object is to provide a closure for a container, so arranged that it is strong in a lateral or bending direction but is weak and readily breakable for opening in a twisting direction.

Another object is to provide a closure of the type indicated in which structure is provided to form a satisfactory closure after the member has been initially broken for initial opening.

Other objects will appear from time to time in the specification and claims.

The invention is illustrated more or less diagrammatically in the accompanying drawing, wherein:

Figure 1 is a side elevation of one form of the device;

Figure 2 is a top plan view of Figure 1;

Figure 3 is a side elevation of the closure after opening and after the removal of the closing member;

Figure 4 is a longitudinal section taken on an enlarged scale on line 4—4 of Figure 1;

Figure 5 is an elevation of the central pin of the closure.

Like parts are indicated by like characters in the specification and drawings.

The invention in the particular form here shown is applied to a screw cap 1. The cap may be of any standard form, and the invention may be applied to any closure or container.

The closure proper includes a pouring or discharging spout which is preferably made of relatively weak material. As shown, it comprises a member 2 which is tapered as at 3, although it might have any other shape. The member is reduced in thickness and weakened as at 4. Adjacent the reduced portion it is provided with an inclined surface for bevel 5. It is enlarged again above the weakened portion as at 6, and the portion 6 may be knurled or otherwise roughened on its exterior. For convenience and appearance the portion 6 may be rounded on its upper end as at 7, although this is not necessary. The member 2 may be conveniently shaped to engage the edge 8 of the cap or nozzle 1. As shown, the closure is perforated and the edge 8 is engaged between the shoulder 9 of the member 2 and a flange 10 of that member. The engagement shown may be conveniently made by spinning, riveting or otherwise shaping the shoulder 10 against the portion 8 after the member 2 has

2

been inserted in the opening of the cover member 1. A pouring passage 11 is formed within the member 2.

The parts thus far described include the cap or nozzle 1 and the pouring spout 2. A strengthening and closing member is provided within the spout 2. This comprises a pin-like member 12 generally of a diameter to fit tightly within the perforation or passage 11. It is somewhat enlarged and provided with longitudinal grooves as at 13. It may be reduced as at 14 to provide a shoulder 15 above the upper or outer ends of the members 13. The pin 12 is preferably of stronger material than that of which the member 2 and its associated integral parts is made.

The present invention is not limited to a particular method of manufacture. In the completed article as shown the pin 12 is in position within the passage 11 of the member 2. The enlarged portion 13 is within the head portion 6, and the shoulder 15 formed at the top of the member 13 is overlaid by a portion 16 of the cap 6. Thus the pin is gripped within the cap 6, and because of the fact that the portion 13 is of greater diameter than the portions 12 or 14, it cannot be displaced in either direction from the cap 6 which embraces it. So long as the parts are in the condition shown in Figures 1 and 4, a complete and integral seal is provided by the pouring spout 2, the portion 4, and the cap 6.

Although I have shown an operative form of my invention, it will be recognized that many changes in the form, shape and arrangement of parts can be made without departing from the spirit of the invention, and my showing is therefore to be taken as, in a sense, diagrammatic.

With the parts as shown, the closure is complete, and leakage is impossible. When containers, closed as shown, are shipped, they may be submitted to rough uses. The main body of the member 2 is sufficiently strong to resist lateral bending or breakage, and the weakened portion 4 is strengthened by the presence within it of the pin 12, which prevents breakage due to lateral bending or thrust.

When the container is to be opened, the cap 6 is twisted with respect to the portion 2 and the cap or cover 1. When this occurs, the portion 4 is broken, and the pin may then be pulled outwardly from the passage 11 to the position of Figure 3. In this position the pouring may occur. Because the parts fit tightly together when the pin 12 is reinserted in the passage 11, it is held tightly in place by friction and serves as an ade-

quate closure for the container when in normal use.

I claim:

1. A pouring spout shaped to provide a pouring passage within itself, said spout shaped to provide a weakened portion, and having an enlargement and a closing, and a reinforcing member of substantial length and of a relatively stronger material than said spout positioned within said passage and fixed to said enlargement and extending above and below said weakened portion, said weakened portion adapted to be broken by twisting, said closing and reinforcing member serving as a removable closure for said spout after said weakened portion has been broken.

2. A pouring spout shaped to provide a pouring passage within itself, said spout shaped to provide a weakened portion, and having an enlargement and a closing, and a reinforcing member of a relatively stronger material than said spout positioned within said passage and fixed to said enlargement, said closing and reinforcing member having a roughened enlargement positioned within the enlargement of said spout, said weakened portion adapted to be broken by twisting, said closing and reinforcing member serving as a removable closure for said spout after said weakened portion has been broken.

3. A pouring spout shaped to provide a pouring passage within itself, said spout shaped to provide a weakened portion, and having an enlargement and a closing, and a reinforcing member of a relatively stronger material than said spout positioned within said passage and fixed to said enlargement, said closing and reinforcing member having a roughened enlargement positioned within the enlargement of said spout, said spout enlargement overlapping and fitting closely about the enlargement of said closing and reinforcing member, said weakened portion adapted to be broken by twisting, said member

serving as a removable closure for said spout after said weakened portion has been broken.

4. A pouring spout shaped to provide a pouring passage within itself, said spout shaped to provide a weakened portion of reduced diameter, and having an enlargement and a closing, and a reinforcing member of a relatively stronger material than said spout positioned within said passage and fixed to said enlargement and extending above and below said weakened portion, said weakened portion adapted to be broken by twisting, said closing and reinforcing member serving as a removable closure for said spout after said weakened portion has been broken.

5. A pouring spout formed of a relatively weak metal and shaped to provide a pouring passage within itself, said spout shaped to provide a weakened portion, and having an enlargement and a closing, and a reinforcing member of a relatively stronger metal than said spout positioned within said passage and fixed to said enlargement, said closing and reinforcing member having a roughened enlargement positioned within the enlargement of said spout, said weakened portion adapted to be broken by twisting, said closing and reinforcing member serving as a removable closure for said spout after said weakened portion has been broken.

ARTHUR J. COLLINS.

REFERENCES CITED

The following references are of record in the file of this patent:

UNITED STATES PATENTS

Number	Name	Date
562,243	Riley	June 16, 1896
758,309	Fletcher	Apr. 26, 1904
1,080,747	Buckley	Dec. 9, 1913
1,081,555	Russell, Jr.	Dec. 16, 1913
1,190,708	Bennett	July 11, 1916
1,327,190	Bigoney	Jan. 6, 1920
2,392,195	Shonnard	Jan. 1, 1948