J. W. BUTTS.

WATER SYSTEM.

APPLICATION FILED JULY 21, 1913.

1,136,406. Patented Apr. 20, 1915.

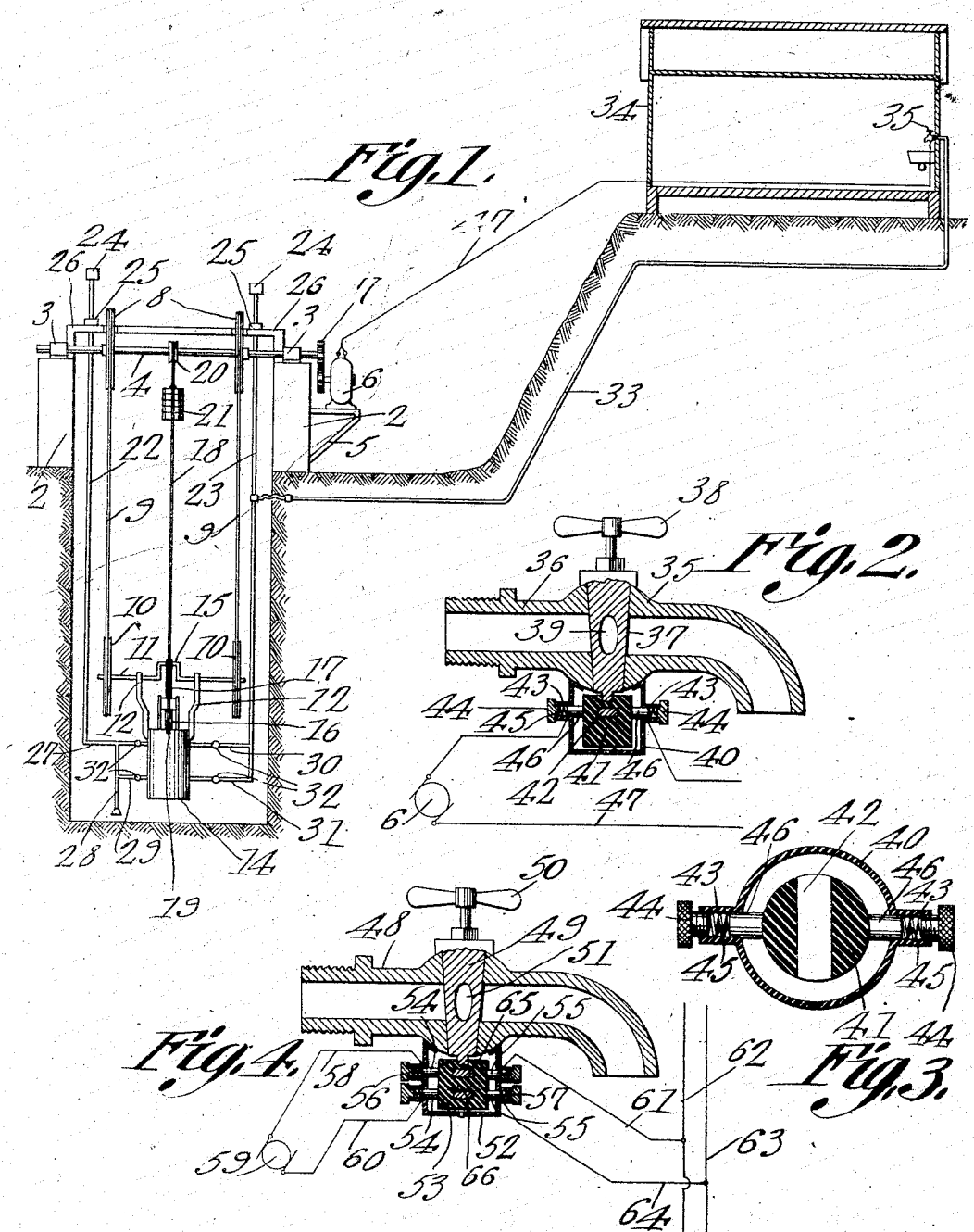

Witnesses

J. R. Fomein

S. Willson

J. W. Butts, Inventor

by C. A. Snow & Co

Attorneys

UNITED STATES PATENT OFFICE.

JOHN WILBURN BUTTS, OF ATLANTA, GEORGIA.

WATER SYSTEM.

1,136,406. Specification of Letters Patent. Patented Apr. 20, 1915.

Application filed July 21, 1913. Serial No. 780,276.

To all whom it may concern:

Be it known that I, JOHN W. BUTTS, a citizen of the United States, residing at Atlanta, in the county of Fulton and State of Georgia, have invented a new and useful Water System, of which the following is a specification.

One object of the present invention is to provide novel means for suspending a pump in a well or other source of supply, and to provide novel means for operatively connecting the pump with the driving mechanism therefor.

The invention aims to provide a novel form of faucet, constituting a switch whereby an electrical circuit may be opened and closed. It is within the scope of the invention to improve generally and to enhance the utility of, devices of that type to which the present invention appertains.

With the above and other objects in view which will appear as the description proceeds, the invention resides in the combination and arrangement of parts and in the details of construction hereinafter described and claimed, it being understood that changes in the precise embodiment of the invention herein disclosed can be made within the scope of what is claimed without departing from the spirit of the invention.

In the drawings:—Figure 1 is a sectional view showing the complete apparatus, the faucet portion thereof being indicated diagrammatically. Fig. 2 is a vertical section through the faucet; Fig. 3 is a horizontal section through the faucet; Fig. 4 is a vertical sectional view showing a modified form of faucet, a portion of the electrical circuit being indicated diagrammatically.

In the accompanying drawings, the numeral 1 indicates a well or other source of water supply. Mounted adjacent the well 1 is a supporting structure which may comprise piers 2 having bearings 3 in which is journaled for rotation a drive shaft 4. Supported upon a bracket 5 projecting from one of the piers 2 or in any other desired manner, is an electrical motor 6. Intermeshing pinions 7 connect the armature shaft of the motor 6 with the drive shaft 4.

Secured to the drive shaft 4 are grooved pulleys 8 about which are trained belts 9, passed around pulleys 10 secured to a shaft 11 journaled in bearings 12 carried by a pump 14 located in the well 1. The shaft 11 includes a crank 15 which is connected with the plunger 16 of the pump 14 through the instrumentality of a pitman 17. A flexible element 18 is secured as indicated at 19 to the pump 14 and is carried upwardly around a pulley 20 journaled for rotation on the drive shaft 19, the free, depending end of the flexible element 18 carrying a plurality of individually removable weights 21.

Vertically disposed pipes 22 and 23 are shown, the pipes being closed at their upper ends as shown at 24. The pipes 22 and 23 are mounted to slide in collars 25 which may be carried on brackets 26 connected with the piers 2, or supported in any other suitable manner. The pipe 22 is provided with a branch 27 communicating with the upper portion of the cylinder of the pump 14. Projecting from the branch 27 is an inlet 28 and projecting from the inlet 28 is a branch 29 which communicates with the lower portion of the cylinder of the pump 14. Projecting from the cylinder of the pump 14 is a branch pipe 30, communicating with the pipe 23 and extended from the upper portion of the cylinder of the pump. Another branch 31 projects from the lower portion of the cylinder of the pump 14 and communicates with the lower end of the pipe 23. In the branches 27, 28, 31 and 30, check valves 32 may be interposed.

Communicating with the pipe 23 is a main pipe 33 entering a building 34. At this point it may be stated that any number of connections may be provided, but, for the sake of illustration, it will be presupposed that but one building is supplied, the foregoing supposition being entertained merely for the purpose of simplifying the drawings. The main pipe 33 communicates with the faucet 35 indicated diagrammatically in Fig. 1 and shown in detail in Fig. 2.

The faucet 35 comprises a body 36 in which is journaled a valve 37 operated by a handle 38 and provided with a transverse opening 39 through which water is adapted to pass when the faucet is open. Secured in any desired manner to the lower portion of the body 36 of the faucet is a casing 40 which, as clearly indicated in the drawings, is fashioned from insulating material. A head 41, fashioned from insulating material, such as fiber, is secured to the valve 37 to rotate therewith the lower portion of the head 41, if desired, being journaled in the bottom

of the casing 40. Extended transversely through the insulating head 41 is a conducting bar 42, fashioned from any suitable metal. The casing 40 is equipped with projecting tubular extensions 43 into which are threaded screws 44, engaging springs 45 bearing against slidably mounted brushes 46. The brushes 46 and the conducting bar 42 are located in a common plane. The brushes 46 are in slidable contact with the terminals of the electrical circuit 47 including the motor 6.

When the valve 37 is rotated by means of the handle 38 so that the opening 39 constitutes a continuation of the bore of the body 36 of the faucet 35, the insulating head 41 is rotated until the ends of the conducting bar 42 are engaged by the brushes 46. The brushes 46 preferably are fashioned from carbon.

Under the circumstances above pointed out there is established, when the faucet 35 is opened, to permit the passage of water therethrough, a closed electrical circuit comprising the motor 6, the circuit wire 47, the brushes 46 and the conducting bar 42. Thus, the motor 6 will be put into operation. When, as shown in Fig. 2, the faucet 35 is closed to shut off the flow of water therethrough, the brushes 46 are thrust inwardly by the springs 45 and engage the insulating head 41. The circuit therefore, is open, and the motor 6 will not operate. The construction above outlined is such that when the faucet is opened, the motor 6 will be in operation, but, when the faucet is closed, the motor 6 will be out of operation.

When the motor 6 is put into operation in the manner above described, the intermeshing pinions 7 will transmit motion to the drive shaft 4, the latter through the pulleys 8 and the belt 9 transmitting motion to the shaft 11, the crank 15 of which, through the medium of the pitman 17 will operate the plunger 16 of the pump 14. The pump is a double acting one, and, when in operation, water will be drawn inwardly through the inlet 28, through the branches 27 and 29, the water passing outwardly through the branches 30 and 31 into the pipe 23 and from the pipe 23 by way of the main pipe 33 to the faucet 35.

It is to be observed that the belts 9 not only serve as a means for actuating the pump 14 but, as well, may constitute the sole means for supporting the pump in the well 1. The weights 21 may be increased or decreased in number, thus increasing or decreasing the tension on the flexible element 18, the lower end of which is connected as shown at 19 to the pump 14. The flexible element 18, it will be recalled, passes over the pulley 20 which is journaled on the drive shaft 4, and by decreasing the number of weights 21 the tension of the supporting and actuating belts 9 may be regulated. The pipes 22 and 23, sliding in the collars 25 act as guides directing the vertical movement of the pump 14 when the position thereof in the well 1 is adjusted.

Referring to the modification shown in Fig. 4, the faucet is shown as comprising a body 48 in which is journaled a valve 49 provided with an operating handle 50, there being an opening 51 in the valve 49. Secured, as before, to the lower portion of the body 48 of the faucet is a casing 52. Located in the casing 52 and connected to the lower end of the valve 49 for rotation therewith, is an insulating head 53. Brushes 54 and 55 are shown, the brushes being controlled by springs 57 and screws 56. From one brush 54 at one side of the casing 52 extends a conductor 58, connected to one side of the motor 59. Extended from the other side of the motor 59 is a conductor 60 which is operatively connected with the brush 55 upon the same side of the casing 52 as the brush 54 referred to specifically. Extended from the other brush 54 is a conductor 61, connected to a line conductor 62. The other line conductor is denoted by the numeral 63 and from the conductor 63 leads a conductor 64 which is connected to the brush 55 upon the same side of the casing as the brush 54 last above referred to. The insulating body 48 of the valve is provided with a pair of conducting bars 65 and 66. The conducting bar 65 is located in a common plane with the upper brushes 54 and 55 and the lower conducting bar 66 is located in a common plane with the lower brushes 54 and 55. The construction above described, generally considered, involves a duplication of certain portions of the structure shown in Fig. 2, and an extended description is considered unnecessary.

When the valve 49 is rotated by means of the handle 50 to open the faucet, the upper conducting bar 65 comes into contact with the upper brushes 54 and 55 and the lower conducting bar 66 comes into contact with the lower brushes 54 and 55. Then there is established a circuit comprising the line conductor 62, the conductor 61, one brush 54, conducting bar 65, the opposite brush 54, the conductor 58, the motor 59, the conductor 60, the lower brush 55, the lower conducting bar 66, the opposite brush 55, the conductor 64, and the line conductor 63.

From the foregoing it will be observed that there is provided in this application, a combined faucet and switch which may be used readily upon all commercial voltages on either direct or alternating current. The parts are so positioned and constructed that commercial voltages may be carried readily without effecting an overheating or a crystallization of any of the parts.

Having thus described the invention, what is claimed is:—

In a device of the class described, a thin-walled cup-like casing fashioned from insulating material and provided with integrally formed, outstanding tubular extensions; an insulating head journaled in the casing; a conducting bar extended through the head; brushes adapted to engage with the ends of the bar, the brushes being mounted to slide in the extensions in direct contact therewith; springs in the extensions and engaging the brushes; adjusting devices in the extensions and coacting with the springs; and conductors entering the casing in spaced relation to the outer ends of the extensions, the brushes being in direct sliding contact with the conductors.

In testimony that I claim the foregoing as my own, I have hereto affixed my signature in the presence of two witnesses.

JOHN WILBURN BUTTS.

Witnesses:
J. A. BOUDERVANT,
J. Y. ABBOTT.